Ciencia Latina Revista Científica Multidisciplinar, Ciudad de México, México.
ISSN 2707-2207 / ISSN 2707-2215 (en línea), septiembre-octubre 2025,
Volumen 9, Número 5.

https://doi.org/10.37811/cl_rcm.v9i5

APROXIMACIONES DE BORN-OPPENHEIMER Y HARTREE-FOCK APLICADAS A CAMPOS CUÁNTICOS RELATIVISTAS. VOLUMEN IV

BORN-OPPENHEIMER AND HARTREE-FOCK APPROXIMATIONS APPLIED TO RELATIVISTIC QUANTUM FIELDS. VOLUME IV

Manuel Ignacio Albuja Bustamante
Investigador Independiente

DOI: https://doi.org/10.37811/cl_rcm.v9i5.20542

APROXIMACIONES DE BORN-OPPENHEIMER Y HARTREE-FOCK APLICADAS A CAMPOS CUÁNTICOS RELATIVISTAS. VOLUMEN IV

Manuel Ignacio Albuja Bustamante[1]
ignaciomanuelalbujabustamante@gmail.com
https://orcid.org/0009-0005-0115-767X
Investigador Independiente

RESUMEN

En trabajos anteriores, este autor ha procurado formalizar matemáticamente y proponer las leyes relativas a la Teoría Cuántica de Campos Relativistas o Curvos, cuya finalidad, es reconciliar la relatividad general y la mecánica cuántica. Para abonar aún más a la consecución del objetivo antes referido, es indispensable acudir a la química cuántica, y muy concretamente a las métricas de Born-Oppenheimer y Hartree-Fock, en la medida en que, la primera desarrolla un escenario relativista a escala atómica y molecular en tanto que la segunda explica perfectamente las trayectorias orbitales moleculares, las cuales, en términos generales, son conceptos de muchísima utilidad para la TCCR toda vez que coadyuvan, por extrapolación, a configurar desde la química cuántica, el modelo de deformación del espacio – tiempo cuántico, por acción gravitacional de las partículas subatómicas estrella u oscuras, o por interacción de éstas, con los campos supergravitónico o gravitónico, según sea el caso, esto es, por interacción con el gravitón o el gravitino o supergravitón, según corresponda.

Palabras Clave: química cuántica, aproximación de Born-Oppenheimer, aproximación de Hartree-Fock, teoría cuántica de campos relativistas o curvos

[1] Autor principal
Correspondencia: ignaciomanuelalbujabustamante@gmail.com

BORN-OPPENHEIMER AND HARTREE-FOCK APPROXIMATIONS APPLIED TO RELATIVISTIC QUANTUM FIELDS. VOLUME IV

ABSTRACT

In previous works, this author has tried to mathematically formalize and propose the laws related to the Quantum Theory of Relativistic or Curved Fields, whose purpose is to reconcile general relativity and quantum mechanics. To further contribute to the achievement of the aforementioned objective, it is essential to resort to quantum chemistry, and very specifically to the Born-Oppenheimer and Hartree-Fock metrics, insofar as the former develops a relativistic scenario at the atomic and molecular scale while the latter perfectly explains the molecular orbital trajectories, which, in general terms, they are very useful concepts for TCCR since they contribute, by extrapolation, to configure from quantum chemistry, the model of deformation of quantum space-time, by gravitational action of star or dark subatomic particles, or by interaction of these, with supergravitonic or gravitonic fields, as the case may be. that is, by interaction with the graviton or the gravitino or supergraviton, as appropriate.

Keywords: quantum chemistry, Born-Oppenheimer approximation, Hartree-Fock approximation, quantum theory of relativistic or curved fields.

Artículo recibido 05 setiembre 2025
Aceptado para publicación: 09 octubre 2025

INTRODUCCIÓN

En sentido estricto, la aproximación de Born-Oppenheimer, propone un factor que viene a ser determinante para la TCCR, y es, la incidencia del núcleo respecto del electrón, esto es, que el primero, al ser más denso que el segundo, es decir, que al tener mayor masa, repercute en el movimiento y por ende, en la velocidad del electrón, razón por la cual, el núcleo se acopla al electrón y viceversa, comportándose el núcleo, de forma estática en tanto que el electrón, actúa como una nube de carga, leyendo la posición estática del núcleo en el campo. Es en este contexto, a propósito del diferencial de masas, que la TCCR cobra mayor rigor matemático en razón a la interacción de la partícula estrella u oscura con las partículas orbitales o repercutidas.

Ahora bien, la aproximación de Hartree-Fock, también resulta vinculante a la TCCR, en la medida en que, en química cuántica, determina los orbitales moleculares, premisa superior que a escala subatómica, aplica, a propósito de la existencia de campos cuánticos curvos o deformados por la gravedad, en los que, los orbitales de las partículas subatómicas se ven metamorfoseados, para lo cual, extrapolaremos las ecuaciones multideterminantales de Slater.

Entiéndase que las partículas oscuras o estrella, muestran estados fundamentales pues accionan gravedad, en tanto que, las partículas orbitales o repercutidas, muestran estados excitados por influjo gravitacional, a propósito de las bases formales de la TCCR propuestas por este autor en trabajos previos. La gravedad y supergravedad a escala cuántica son en sí, interacciones normales o extremas, según sea el caso, entre uno y varios cuerpos subatómicos a razón de sus centros de masa – energía.

RESULTADOS Y DISCUSIÓN.

Aproximación de Hartree-Fock para campos cuánticos relativistas o curvos. Modelo Matemático.

$$E = \int d^3\boldsymbol{r}\varepsilon(\boldsymbol{r})$$

$$\varepsilon = \varepsilon_N\left[\rho_n, \rho_p, \tau_n, \tau_p, \boldsymbol{J}_n, \boldsymbol{J}_p\right] + \varepsilon_\Lambda\left[\rho_n, \rho_p, \rho_\Lambda, \tau_\Lambda, \boldsymbol{J}_N, \boldsymbol{J}_\Lambda\right]$$

$$\left[\rho_q, \tau_q, \boldsymbol{J}_q\right] = \sum_{k=1}^{N_q} n_q^k \left[\left|\phi_q^k\right|^2, \left|\nabla\phi_q^k\right|^2, \phi_q^{k^*}\left(\nabla\phi_q^k \times \boldsymbol{\sigma}\right)/i\right],$$

$$V_q(\boldsymbol{r}_1, \boldsymbol{r}_2) = V_q'\left[1 - \frac{\rho_N\left((\boldsymbol{r}_1 + \boldsymbol{r}_2)/2\right)}{0.16\text{fm}^{-3}}\right]\delta(\boldsymbol{r}_1 - \boldsymbol{r}_2).$$

$$\left[-\boldsymbol{\nabla}\cdot\frac{1}{2m_q^*(\boldsymbol{r})}\boldsymbol{\nabla}+V_q(\boldsymbol{r})-i\boldsymbol{W}_q(\boldsymbol{r})\cdot(\boldsymbol{\nabla}\times\boldsymbol{\sigma})\right]\phi_q^k(\boldsymbol{r})=e_q^k\phi_q^k(\boldsymbol{r})$$

$$\begin{aligned}\varepsilon_\Lambda =&\frac{\tau_\Lambda}{2m_\Lambda}+a_0\rho_\Lambda\rho_N+a_1(\rho_\Lambda\tau_N+\rho_N\tau_\Lambda)\\&-a_2(\rho_\Lambda\Delta\rho_N+\rho_N\Delta\rho_\Lambda)/2\\&+a_3\rho_\Lambda\rho_N^{1+\alpha}-a_4(\rho_\Lambda\nabla\cdot J_N+\rho_N\nabla\cdot J_\Lambda)\end{aligned}$$

$$V_\Lambda=a_0\rho_N+a_1\tau_N-a_2\Delta\rho_N+a_3\rho_N^{1+\alpha}$$

$$V_N^{(\Lambda)}=a_0\rho_\Lambda+a_1\tau_\Lambda-a_2\Delta\rho_\Lambda+a_3(1+\alpha)\rho_\Lambda\rho_N^\alpha.$$

$$\beta_2^{(q)}=\sqrt{\frac{\pi}{5}}\frac{\langle 2z^2-r^2\rangle_q}{\langle z^2+r^2\rangle_q}.$$

$$V_{\Lambda N}^{\mathrm{CSB}}=-\frac{v_0}{2}\tau_z^N\delta(\mathbf{r}_\Lambda-\mathbf{r}_N),$$

$$\varepsilon_{\Lambda N}^{\mathrm{CSB}}=-\frac{v_0}{2}\rho_\Lambda(\rho_n-\rho_p).$$

$$V_\Lambda^{\mathrm{CSB}}=-\frac{v_0}{2}(\rho_n-\rho_p),$$

$$V_n^{\mathrm{CSB}}=-\frac{v_0}{2}\rho_\Lambda,$$
$$V_p^{\mathrm{CSB}}=+\frac{v_0}{2}\rho_\Lambda.$$

$$B_\Lambda(Z,N,N_\Lambda=1)=B\left({}^{A}_{\Lambda}Z\right)-B\left({}^{A-1}Z\right).$$

$$\Delta B_\Lambda(A=N+Z+1)=B_\Lambda(Z,N,1)-B_\Lambda(N,Z,1).$$

$$\rho^A(\mathbf{r})=w_A(\mathbf{r})\rho(\mathbf{r})$$

$$\rho_{\mathrm{rad}}^A(\mathbf{r})=4\pi r_A^2\rho^A(\mathbf{r})$$

$$\xi_{\mathrm{rad}}^A(\mathbf{r})=4\pi r_A^2\xi^A(\mathbf{r})$$

$$E=\sum_{ab}\gamma_{ab}(t_{ab}+v_{ab}^{\mathrm{ne}})+\sum_{abcd}\Gamma_{abcd}\langle ab\mid cd\rangle,$$

$$t_{ab}=-\frac{1}{2}\int\psi_a^*(\mathbf{r})\nabla^2\psi_b(\mathbf{r})d\mathbf{r}=\frac{1}{2}\int\nabla\psi_a^*(\mathbf{r})\nabla\psi_b(\mathbf{r})d\mathbf{r}$$

$$v_{ab}^{\mathrm{ne}}=\sum_{A=1}^{M}\int\psi_a^*(\mathbf{r})\frac{-Z_A}{r_A}\psi_b(\mathbf{r})d\mathbf{r}$$

$$\langle ab\mid cd\rangle=\iint\psi_a^*(\mathbf{r}_1)\psi_b^*(\mathbf{r}_2)r_{12}^{-1}\psi_c(\mathbf{r}_1)\psi_d(\mathbf{r}_2)d\mathbf{r}_1d\mathbf{r}_2$$

$$\gamma_{ab}^{\mathrm{ROHF}}=f_a\delta_{ab},$$

$$\Gamma_{abcd}^{\mathrm{ROHF}} = \frac{f_a f_b}{2}(j_{ab}\delta_{ac}\delta_{bd} - k_{ab}\delta_{ad}\delta_{bc})$$

$$T^s(\mathbf{r}) = -\frac{1}{2}\sum_{ab} \gamma_{ab}\psi_a^*(\mathbf{r})\nabla^2\psi_b(\mathbf{r})$$

$$T^+(\mathbf{r}) = \frac{1}{2}\sum_{ab} \gamma_{ab}\nabla\psi_a^*(\mathbf{r})\nabla\psi_b(\mathbf{r})$$

$$V^{\mathrm{ne}}(\mathbf{r}) = -\sum_{A=1}^{M} \frac{Z_A}{r_A}\rho(\mathbf{r})$$

$$\rho(\mathbf{r}) = \sum_{ab} \gamma_{ab}\psi_a^*(\mathbf{r})\psi_b(\mathbf{r})$$

$$V^{\mathrm{ee}}(\mathbf{r}) = \sum_{abcd} \Gamma_{abcd}\psi_a^*(\mathbf{r})\psi_c(\mathbf{r})\int \frac{\psi_b^*(\mathbf{r}_2)\psi_d(\mathbf{r}_2)}{|\mathbf{r}-\mathbf{r}_2|}d\mathbf{r}_2$$

$$J(\mathbf{r}) = \sum_{ab} j_{ab}\frac{f_a f_b}{2}\psi_a^*(\mathbf{r})\psi_a(\mathbf{r})\int \frac{\psi_b^*(\mathbf{r}_2)\psi_b(\mathbf{r}_2)}{|\mathbf{r}-\mathbf{r}_2|}d\mathbf{r}_2$$

$$K(\mathbf{r}) = -\sum_{ab} k_{ab}\frac{f_a f_b}{2}\psi_a^*(\mathbf{r})\psi_b(\mathbf{r})\int \frac{\psi_b^*(\mathbf{r}_2)\psi_a(\mathbf{r}_2)}{|\mathbf{r}-\mathbf{r}_2|}d\mathbf{r}_2$$

$$\xi_c(\mathbf{r}) = \xi(\mathbf{r}) - \xi_{\mathrm{HF}}(\mathbf{r})$$

$$\gamma = \gamma^\alpha + \gamma^\beta,$$

$$\mathbf{\Gamma} = \mathbf{\Gamma}^{\alpha\alpha} + \mathbf{\Gamma}^{\beta\beta} + \mathbf{\Gamma}^{\alpha\beta} + \mathbf{\Gamma}^{\beta\alpha}$$

$$\Delta\rho_{\mathrm{rad}}(r) = \rho_{\mathrm{rad}}^{\mathrm{exFCI}}(r) - \rho_{\mathrm{rad}}^{\mathrm{RHF}}(r).$$

$$\tilde{V}_{c,\mathrm{rad}}^{\mathrm{ne},\sigma}(r) = \frac{V_{c,\mathrm{rad}}^{\mathrm{ne},\sigma}(r)}{N^\sigma}$$

$$\tilde{V}_{c,\mathrm{rad}}^{\mathrm{ee},\alpha\beta}(r) = \frac{V_{c,\mathrm{rad}}^{\mathrm{ee},\alpha\beta}(r)}{N^\alpha N^\beta},$$

$$\tilde{V}_{c,\mathrm{rad}}^{\mathrm{ee},\sigma\sigma}(r) = \frac{V_{c,\mathrm{rad}}^{\mathrm{ee},\sigma\sigma}(r)}{\frac{1}{2}N^\sigma(N^\sigma - 1)}.$$

$$E_{c,\mathrm{rad}}^{+}(r) = T_{c,\mathrm{rad}}^{+}(r) + V_{c,\mathrm{rad}}^{\mathrm{ne}}(r) + V_{c,\mathrm{rad}}^{\mathrm{ee}}(r),$$

$$\tilde{E}_{c,\mathrm{rad}}^{+}(r) = \frac{E_{c,\mathrm{rad}}^{+}(r)}{\frac{1}{2}N(N-1)},$$

$$2T_c = -V_c$$

$$E_c = \frac{1}{2}V_c$$

$$\begin{aligned}\mathcal{L} = &\bar{\psi}\left[\gamma\left(i\partial - g_\omega\omega - g_\rho\vec{\rho}\vec{\tau} - eA\right) - m - g_\sigma\sigma\right]\psi \\ &+\frac{1}{2}(\partial\sigma)^2 - \frac{1}{2}m_\sigma^2\sigma^2 - \frac{1}{4}\Omega_{\mu\nu}\Omega^{\mu\nu} + \frac{1}{2}m_\omega^2\omega^2 \\ &-\frac{1}{4}\vec{R}_{\mu\nu}\vec{R}^{\mu\nu} + \frac{1}{2}m_\rho^2\vec{\rho}^2 - \frac{1}{4}F_{\mu\nu}F^{\mu\nu}\end{aligned}$$

$$\begin{aligned}\Omega^{\mu\nu} &= \partial^\mu\omega^\nu - \partial^\nu\omega^\mu, \\ \vec{R}^{\mu\nu} &= \partial^\mu\vec{\rho}^\nu - \partial^\nu\vec{\rho}^\mu, \\ F^{\mu\nu} &= \partial^\mu A^\nu - \partial^\nu A^\mu.\end{aligned}$$

$$U(\sigma) = \frac{1}{2}m_\sigma^2\sigma^2 + \frac{1}{3}g_2\sigma^3 + \frac{1}{4}g_3\sigma^4$$

$$g_i(\rho) = g_i(\rho_{\text{sat}})f_i(x), i = \sigma, \omega, \rho,$$

$$f_i(x) = a_i\frac{1 + b_i(x + d_i)^2}{1 + c_i(x + d_i)^2}$$

$$f_\rho(x) = \exp\left(-a_\rho(x - 1)\right)$$

$$\begin{aligned}\mathcal{L} = &\bar{\psi}(i\gamma\cdot\partial - m)\psi \\ &-\frac{1}{2}\alpha_S(\hat{\rho})(\bar{\psi}\psi)(\bar{\psi}\psi) - \frac{1}{2}\alpha_V(\hat{\rho})(\bar{\psi}\gamma^\mu\psi)\left(\bar{\psi}\gamma_\mu\psi\right) \\ &-\frac{1}{2}\alpha_{TV}(\hat{\rho})(\bar{\psi}\vec{\tau}\gamma^\mu\psi)\left(\bar{\psi}\vec{\tau}\gamma_\mu\psi\right) \\ &-\frac{1}{2}\delta_S(\partial_\nu\bar{\psi}\psi)(\partial^\nu\bar{\psi}\psi) - e\bar{\psi}\gamma\cdot A\frac{(1 - \tau_3)}{2}\psi.\end{aligned}$$

$$\alpha_k^\dagger = \sum_n U_{nk}c_n^\dagger + V_{nk}c_n$$

$$E_{\text{RHB}}[\hat{\rho}, \hat{\kappa}] = E_{\text{RMF}}[\hat{\rho}] + E_{\text{pair}}[\hat{\kappa}]$$

$$E_{\text{pair}}[\hat{\kappa}] = \frac{1}{4}\sum_{n_1n_1'}\sum_{n_2n_2'}\kappa_{n_1n_1'}^*\langle n_1n_1'|V^{pp}|n_2n_2'\rangle\kappa_{n_2n_2'}$$

$$V^{pp}(\boldsymbol{r}_1, \boldsymbol{r}_2, \boldsymbol{r}_1', \boldsymbol{r}_2') = -G\delta(\boldsymbol{R} - \boldsymbol{R}')P(\boldsymbol{r})P(\boldsymbol{r}')$$

$$\boldsymbol{R} = \frac{1}{\sqrt{2}}(\boldsymbol{r}_1 + \boldsymbol{r}_2)$$

$$\boldsymbol{r} = \frac{1}{\sqrt{2}}(\boldsymbol{r}_1 - \boldsymbol{r}_2)$$

$$P(\boldsymbol{r}) = \frac{1}{(4\pi a^2)^{3/2}}\exp\left(-\frac{\boldsymbol{r}^2}{2a^2}\right)$$

$$\delta S_{2n}(N,Z) = \frac{S_{2n}(N,Z) - S_{2n}(N+2,Z)}{2}$$

$$H_{\vec{k},\sigma}^{\text{cont}}(\vec{r}) = \frac{-\hbar^2 k^2}{2m^*} + \begin{pmatrix} \Delta_1(\vec{r}) & \Delta_{12}(\vec{r}) & 0 & 0 \\ \Delta_{12}^*(\vec{r}) & \Delta_2(\vec{r}) & \Delta_{23}(\vec{r}) & 0 \\ 0 & \Delta_{23}^*(\vec{r}) & \Delta_3(\vec{r}) & \Delta_{34}(\vec{r}) \\ 0 & 0 & \Delta_{34}^*(\vec{r}) & \Delta_4(\vec{r}) \end{pmatrix},$$

$$\Delta_l(\vec{r}) = V_2^{(0)} + 2V_2^{(1)} \sum_{i=1,3,5} \cos\left(\vec{G}_i \cdot \vec{r} + (-1)^l \phi\right),$$

$$\Delta_{23}(\vec{r}) = V_{23}^{(0)} + 2V_{23}^{(1)} \sum_{i=1,3,5} \cos\left(\vec{G}_i \cdot \vec{r}\right),$$

$$\Delta_1(\vec{r}) = \Delta_4(\vec{r}) = V_1, \Delta_{12}(\vec{r}) = \Delta_{34}(\vec{r}) = V_{12}.$$

$$\vec{G}_i = \frac{4\pi}{\sqrt{3}a_M}\left(\cos\left(\frac{(i-1)\pi}{3}\right), \sin\left(\frac{(i-1)\pi}{3}\right)\right)^T$$

$$H_0 = -\sum_{n=1}^{N_h} \sum_{i,j,\sigma} t_{ij}^{(n)}(\theta) c_{i\sigma}^\dagger c_{j\sigma}$$

$$t_{ij}^{(n)}(\theta) = \begin{cases} t_n(\theta), & \text{if } d_{n-1} < \left|\vec{R}_i - \vec{R}_j\right| < d_{n+1} \\ 0, & \text{else.} \end{cases}$$

$$H_{\text{int}} = U(\theta) \sum_i c_{i\uparrow}^\dagger c_{i\downarrow}^\dagger c_{i\downarrow} c_{i\uparrow}$$

$$U(\theta) = U(\theta_0)\sqrt{\theta/\theta_0}.$$

$$H_{\text{int}}^{\text{MF}} = \sum_{j,\sigma} \Delta_{j\bar{\sigma}} n_{j\sigma} + \sum_j \left(\Delta_{j-} c_{j\uparrow}^\dagger c_{j\downarrow} + \Delta_{j+} c_{j\downarrow}^\dagger c_{j\uparrow}\right) - \frac{1}{U_0} \sum_j \left(\Delta_{j\uparrow}\Delta_{j\downarrow} - \Delta_{j-}\Delta_{j+}\right)$$

$$\Delta_{j\sigma} = U_0 \langle n_{j\sigma} \rangle \text{ and } \Delta_{j+} = \Delta_{j-}^* = -U_0 \left\langle c_{j\uparrow}^\dagger c_{j\downarrow} \right\rangle$$

$$\langle S_j^x \rangle = \frac{\Delta_{j+} + \Delta_{j-}}{-2U}, \left\langle S_j^y \right\rangle = \frac{\Delta_{j+} + \Delta_{j-}}{-2Ui}, \langle S_j^z \rangle = \frac{\Delta_{j\uparrow} - \Delta_{j\downarrow}}{2U_0}.$$

$$m = \frac{1}{N} \sum_{i=1}^{N} \sqrt{\langle S_i^x \rangle^2 + \langle S_i^y \rangle^2 + \langle S_i^z \rangle^2}$$

$$\vec{m}_{\text{FM}} = \sum_i \langle \vec{S}_i \rangle / N$$

$$\vec{m}_{\mathrm{AFM}} = \sum_i (-1)^i \langle \vec{S}_i \rangle / N$$

$$\langle \vec{S}_i \rangle = \langle \vec{S}_{j,\lambda} \rangle = \sum_{\vec{q}} \vec{S}_{\vec{q},\lambda} e^{i\vec{q}\cdot\vec{R}_j},$$

$$R(N,U) = 1 - \frac{S_{\mathrm{AFM}}(\vec{q}+\delta\vec{q})}{S_{\mathrm{AFM}}(\vec{q})}$$

$$S_{\mathrm{AFM}} = \frac{1}{N}\sum_{i,j} e^{-i\vec{q}\cdot(\vec{R}_i-\vec{R}_j)} \langle (S^z_{i,A} - S^z_{i,B})(S^z_{j,A} - S^z_{j,B}) \rangle.$$

$$R(N,U) = \mathcal{F}\left[(U-U_c)N^{1/2\nu}\right]$$

$$R_n(t,E_0) = \frac{1}{N_{\mathrm{path}}} \sum_{i=1}^{N_{\mathrm{path}}} \omega_i \left| E_n^{\mathrm{cont}}(\vec{k}_i) - E_n^{\mathrm{tb}}(t;\vec{k}_i) - E_0 \right|^2.$$

$$H^{\mathrm{MF}} = H_0 + H_{\mathrm{int}}^{\mathrm{MF}} = \sum_{j,j'} \sum_{\sigma\sigma'} c^\dagger_{j\sigma} \mathcal{H}^{\sigma\sigma'}_{jj'} c_{j'\sigma'} + \text{ const. },$$

$$\frac{F}{N} = -\frac{T}{N}\sum_l \ln\left(1 + e^{-\beta(\epsilon_l-\mu)}\right) + \mu n$$
$$-\frac{1}{NU_0}\sum_j \left(\Delta_{j\uparrow}\Delta_{j\downarrow} - \Delta_j - \Delta_{j+}\right),$$

$$n = \frac{1}{N}\sum_{l=1}^{N} f(\epsilon_l - \mu), f(x) = \frac{1}{e^{x/k_BT}+1}$$

$$g(\mu) = n - \frac{1}{N}\sum_{l=1}^{2N} f(\epsilon_l - \mu)$$

$$g(\mu_1) > n-2, g(\mu_2) < n-2.$$

$$\langle c^\dagger_{i\sigma} c_{j\sigma'} \rangle = \sum_{l=1}^{N} \left(v^l_{i\sigma}\right)^* v^l_{j\sigma'} f(\epsilon_l - \mu)$$

$$\langle \vec{S}_i \rangle = \sum_{\vec{q}} \vec{S}_{\vec{q}} e^{i\vec{q}\cdot\vec{R}_i}$$

$$\frac{1}{N}\sqrt{\sum_{\vec{q}} \left|\vec{S}_{\vec{q}}\right|^2} < a_{\mathrm{tol}}$$

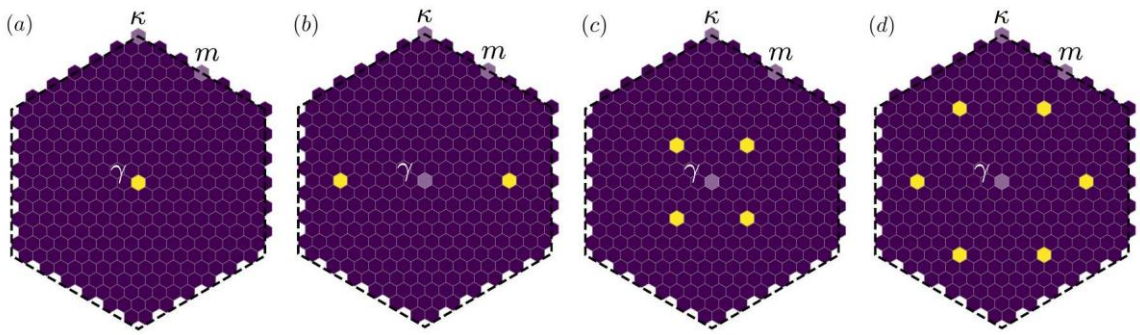

$$\vec{S}_{\vec{Q}} = \vec{S}^{*}_{-\vec{Q}} = \mathcal{S}\begin{pmatrix}1\\0\\0\end{pmatrix}, \vec{S}_{\vec{q}} = \vec{0} \text{ for } \vec{q} \neq \pm\vec{Q}.$$

$$\vec{S}_{\vec{Q}_1} = \vec{S}^{*}_{-\vec{Q}_1} = \mathcal{S}_1\begin{pmatrix}1\\0\\0\end{pmatrix}, \vec{S}_{\vec{Q}_2} = \vec{S}^{*}_{-\vec{Q}_2} = \mathcal{S}_2\begin{pmatrix}0\\1\\0\end{pmatrix}.$$

$$\left|\vec{S}_{\vec{Q}_1}\right| = \left|\vec{S}_{\vec{Q}_2}\right| = \left|\vec{S}_{\vec{Q}_3}\right|.$$

$$D = 4L^3$$

$$q = (\mathbf{l}, \tau_z, s_z)$$

$$H = \sum_{pq} \varepsilon_q^p \hat{a}_p^\dagger \hat{a}_q + \frac{1}{4}\sum_{pqrs} V_{rs}^{pq} \hat{a}_p^\dagger \hat{a}_q^\dagger \hat{a}_s \hat{a}_r + \frac{1}{36}\sum_{pqrsuv} W_{suv}^{pqr} \hat{a}_p^\dagger \hat{a}_q^\dagger \hat{a}_r^\dagger \hat{a}_v \hat{a}_u \hat{a}_s.$$

$$\begin{aligned} \varepsilon_q^p &\to \left[\left[p, q, \varepsilon_p^q\right], \ldots\right] \\ V_{rs}^{pq} &\to \left[\left[p, q, r, s, V_{rs}^{pq}\right], \ldots\right] \\ W_{suv}^{pqr} &\to \left[\left[p, q, r, s, u, v, W_{suv}^{pqr}\right], \ldots\right]. \end{aligned}$$

$$e_{\text{lat}} \equiv \frac{\hbar^2}{2ma^2}$$

$$\hat{H} = \sum_{\mathbf{l}\mathbf{l}'} \sum_{\tau s} T_{\mathbf{l}'}^{\mathbf{l}} \hat{a}_{\mathbf{l}\tau s}^\dagger \hat{a}_{\mathbf{l}'\tau s} + \frac{V}{2}\sum_{\mathbf{l}} \sum_{ss'\tau\tau'} \hat{a}_{\mathbf{l}\tau s}^\dagger \hat{a}_{\mathbf{l}\tau' s'}^\dagger \hat{a}_{\mathbf{l}\tau' s'} \hat{a}_{\mathbf{l}\tau s} + W\sum_{\mathbf{l}} \sum_{\tau s} \hat{a}_{\mathbf{l}\tau\uparrow}^\dagger \hat{a}_{\mathbf{l}\tau}^\dagger \hat{a}_{\mathbf{l}-\tau s}^\dagger \hat{a}_{\mathbf{l}-\tau s} \hat{a}_{\mathbf{l}\tau} \hat{a}_{\mathbf{l}\tau\uparrow}.$$

$$T_{\mathbf{l}'}^{\mathbf{l}} = -\frac{\hbar^2}{2ma^2} \sum_{i=x,y,z} \left(\delta_{\mathbf{l}'}^{\mathbf{l}-\mathbf{e}_i} - 2\delta_{\mathbf{l}'}^{\mathbf{l}} + \delta_{\mathbf{l}'}^{\mathbf{l}+\mathbf{e}_i}\right)$$

$$V = \frac{\hbar^2 v}{2ma^2} \text{ and } W = \frac{\hbar^2 w}{2ma^2},$$

$$(H_{\mathrm{HF}})_q^p = \varepsilon_q^p + \sum_{sr} V_{qs}^{pr} \rho_r^s + \frac{1}{2} \sum_{rsuv} W_{qsv}^{pru} \rho_r^s \rho_u^v.$$

$$E_{\mathrm{HF}} = \sum_{pq} \varepsilon_q^p \rho_p^q + \frac{1}{2} \sum_{sr} V_{qs}^{pr} \rho_p^q \rho_r^s + \frac{1}{6} \sum_{qruv} W_{qsv}^{pru} \rho_p^q \rho_r^s \rho_u^v$$

$$|\phi\rangle = \prod_{i=1}^{A} \hat{a}_i^\dagger |0\rangle.$$

$$\hat{H} = E_{\mathrm{ref}} + \sum_{pq} F_q^p \{\hat{a}_p^\dagger \hat{a}_q\} + \frac{1}{4} \sum_{pqrs} \Gamma_{rs}^{pq} \{\hat{a}_p^\dagger \hat{a}_q^\dagger \hat{a}_s \hat{a}_r\}$$
$$+ \frac{1}{36} \sum_{pqrstu} W_{stu}^{pqr} \{\hat{a}_p^\dagger \hat{a}_q^\dagger \hat{a}_r^\dagger \hat{a}_u \hat{a}_t \hat{a}_u\}$$

$$E_{\mathrm{ref}} = \sum_i \varepsilon_i^i + \frac{1}{2} \sum_{ij} V_{ij}^{ij} + \frac{1}{6} \sum_{ijk} W_{ijk}^{ijk}$$

$$F_q^p = \varepsilon_q^p + \sum_i V_{iq}^{ip} + \frac{1}{2} \sum_{ij} W_{ijq}^{ijp}$$

$$\bar{H} \equiv e^{-\hat{T}} \hat{H} e^{\hat{T}}.$$

$$\hat{T} = \sum_{ia} t_i^a \hat{a}_a^\dagger \hat{a}_i + \frac{1}{4} \sum_{ijab} t_{ij}^{ab} \hat{a}_a^\dagger \hat{a}_b^\dagger \hat{a}_j \hat{a}_i + \cdots$$

$$\bar{H}_i^a \equiv \langle \phi | \hat{a}_i^\dagger \hat{a}_a \bar{H} | \phi \rangle = 0$$

$$\bar{H}_{ij}^{ab} \equiv \langle \phi | \hat{a}_i^\dagger \hat{a}_j^\dagger \hat{a}_b \hat{a}_a \bar{H} | \phi \rangle = 0.$$

$$t^{(k+1)} \to t^{(k)} - \left[J^{(k)}\right]^{-1} r^{(k)}$$

$$t^{(k+1)} \leftarrow a t^{(k+1)} + (1-a) t^{(k)}$$

$$E_{\mathrm{CCS}} = E_0 + \sum_{ia} F_a^i t_i^a + \frac{1}{2} \sum_{ijab} \Gamma_{ab}^{ij} t_i^a t_j^b$$

$$E_{\mathrm{CCSD}} = E_{\mathrm{CCS}} + \frac{1}{4} \sum_{ijab} \Gamma_{ab}^{ij} t_{ij}^{ab}$$

$$\bar{H}_i^a \leftarrow -\frac{1}{2} \sum_{cdk} \Gamma_{cd}^{ak} t_{ki}^{cd}$$

$(N_{\max} + 3/2)\hbar\omega$ is $D_{\mathrm{ho}} = (2/3)(N_{\max} + 1)(N_{\max} + 2)(N_{\max} + 3)$. For $N_{\max} = 7$

$$\bar{H}(s) \equiv U(s) \hat{H} U^\dagger(s)$$

$$\frac{d\bar{H}(s)}{ds} = [\eta(s), \bar{H}(s)]$$

$$\bar{H}(s=0) = E_{\text{ref}} + \sum_{pq} F_q^p \{\hat{a}_p^\dagger \hat{a}_q\} + \frac{1}{4}\sum_{pqrs} \Gamma_{rs}^{pq} \{\hat{a}_p^\dagger \hat{a}_q^\dagger \hat{a}_s \hat{a}_r\},$$

$$\bar{H}(s) = E(s) + \sum_{pq} F_q^p(s)\{\hat{a}_p^\dagger \hat{a}_q\} + \frac{1}{4}\sum_{pqrs} \Gamma_{rs}^{pq}(s)\{\hat{a}_p^\dagger \hat{a}_q^\dagger \hat{a}_s \hat{a}_r\}$$
$$+ \frac{1}{36}\sum_{pqrstu} W_{stu}^{pqr}(s)\{\hat{a}_p^\dagger \hat{a}_q^\dagger \hat{a}_r^\dagger \hat{a}_u \hat{a}_t \hat{a}_u\} + \cdots$$

$$F_a^i(s \to \infty) = 0$$
$$\Gamma_{ab}^{ij}(s \to \infty) = 0$$

$$\langle \phi | \hat{a}_i^\dagger \hat{a}_a \bar{H}(s \to \infty) | \phi \rangle = 0$$
$$\langle \phi | \hat{a}_i^\dagger \hat{a}_j^\dagger \hat{a}_b \hat{a}_a \bar{H}(s \to \infty) | \phi \rangle = 0$$

$$X_{rs}^{pq} \leftarrow \frac{1}{2}\sum_{tu} (\bar{n}_t \bar{n}_u - n_t n_u)\left(\eta_{tu}^{pq} \Gamma_{rs}^{tu} - \Gamma_{tu}^{pq} \eta_{rs}^{tu}\right),$$

$$\hat{H}|\Psi\rangle = E|\Psi\rangle$$

$$\hat{H}(\mathbf{x}_1, \mathbf{x}_2, \dots, \mathbf{x}_N) = -\sum_{k=1}^{N} \frac{\Delta_k}{2} + \sum_{k=1}^{N} V_{\text{ne}}(\mathbf{r}_k) + \sum_{1 \le k < l \le N} V_{\text{ee}}(\mathbf{r}_k - \mathbf{r}_l),$$

$$|\psi_{\mathbf{k}}\rangle = |\chi_{k_1}\chi_{k_2} \cdots \chi_{k_N}\rangle = \frac{1}{\sqrt{N!}} \sum_{\sigma \in S_N} \operatorname{sgn}(\sigma) \prod_{n=1}^{N} \chi_{\sigma(l)}(\mathbf{x}_{k_n})$$

$$H_{\mathbf{k},\mathbf{k}'} = \langle \psi_{\mathbf{k}} | \hat{H} | \psi_{\mathbf{k}'} \rangle, \forall \mathbf{k}, \mathbf{k}',$$

$$\langle k | \hat{h} | k' \rangle = \int \chi_k(\mathbf{x})^* \hat{h}(\mathbf{r}) \chi_{k'}(\mathbf{x}) \mathrm{d}\mathbf{x} \text{ with } \hat{h}(\mathbf{r}) = -\frac{\Delta}{2} + V_{\text{ne}}(\mathbf{r})$$

$$\langle kk' \mid ll' \rangle = \iint \chi_k(\mathbf{x})^* \chi_{k'}(\mathbf{x}')^* V_{\text{ee}}(\mathbf{r} - \mathbf{r}') \chi_l(\mathbf{x}) \chi_{l'}(\mathbf{x}') \mathrm{d}\mathbf{x}\, \mathrm{d}\mathbf{x}'$$

$$H_{\mathbf{k},\mathbf{k}} = \sum_{n=1}^{N} \langle k_{l_n} | \hat{h} | k_{l_n} \rangle + \frac{1}{2} \sum_{n,n'=1}^{N} \left\langle k_{l_n} k_{l_{n'}} \mid k_{l_n} k_{l_{n'}} \right\rangle - \left\langle k_{l_n} k_{l_{n'}} \mid k_{l_{n'}}, k_{l_n} \right\rangle;$$

$$H_{\mathbf{k},\mathbf{k}_a^r} = \langle k_a | \hat{h} | k_r \rangle + \sum_{n=1}^{N} \langle k_a k_{l_n} \mid k_r k_{l_n} \rangle - \langle k_a k_{l_n} \mid k_{l_n} k_r \rangle,$$

$$H_{\mathbf{k},\mathbf{k}_{ab}^{rs}} = \langle k_a k_b \mid k_r k_s \rangle - \langle k_a k_b \mid k_s k_r \rangle$$

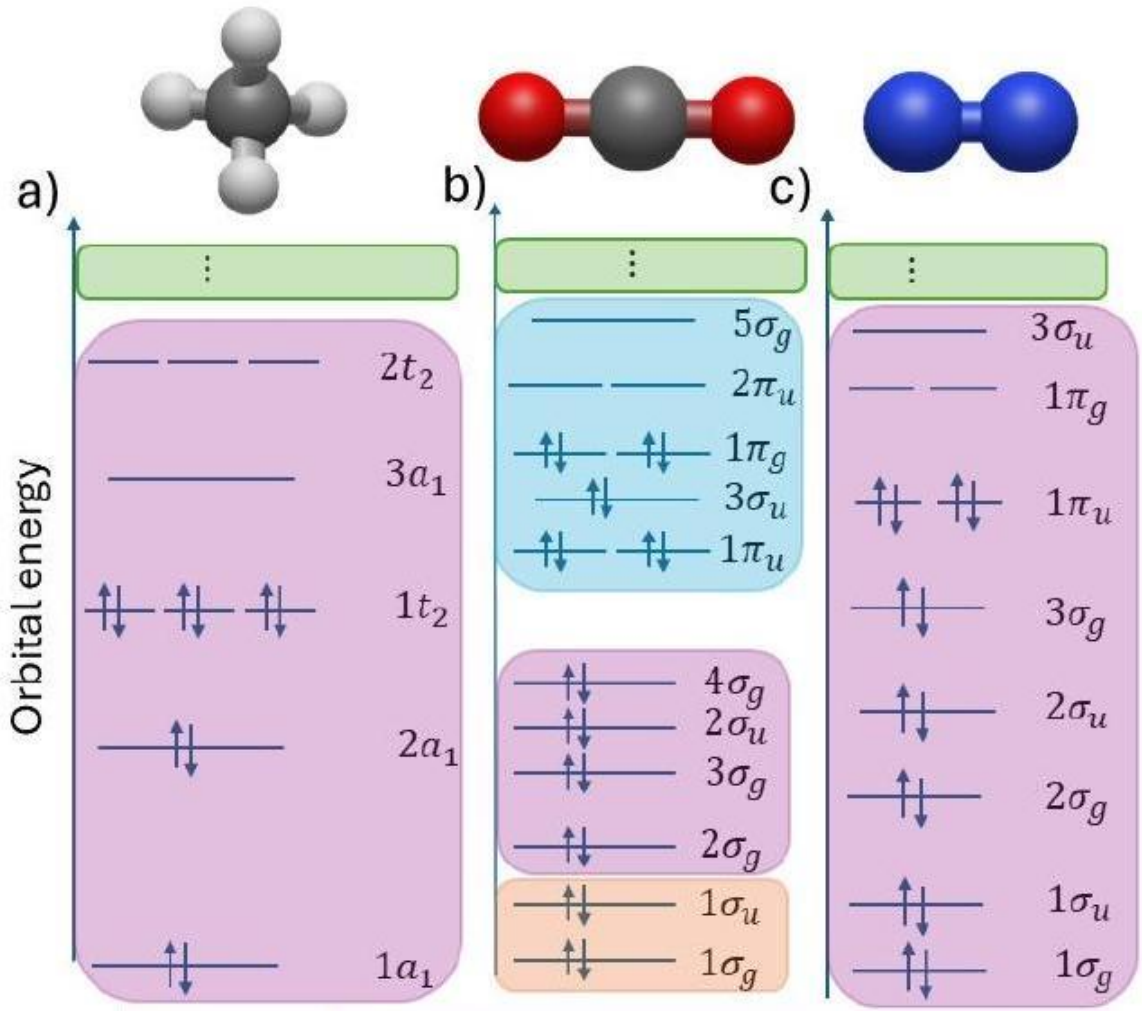

$$|\Psi(t)\rangle = e^{-iHt}|\Psi(0)\rangle$$

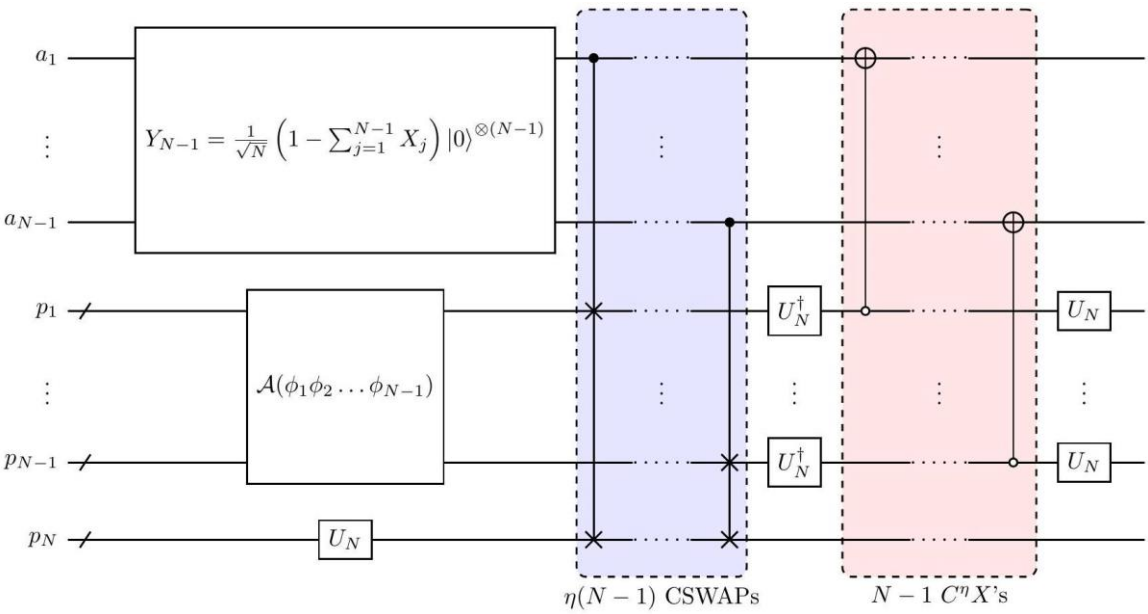

$$|\phi_n\rangle = U_n|0\rangle^{\otimes\eta}.$$

$$\langle \phi_m \mid \phi_n \rangle = \langle 0|^{\otimes\eta} U_m^\dagger U_n \mid 0\rangle^{\otimes\eta} = 0,$$

$$|Y_{N-1}\rangle \equiv \frac{1}{\sqrt{N}}\left(1 - \sum_{j=1}^{N-1} X_j\right)|0\rangle^{\otimes(N-1)}$$

Input: $\mathcal{A}(\phi_1 \ldots \phi_{N-1})$, U_N
Output: $\mathcal{A}(\phi_1 \ldots \phi_N)$
$(p_1, \ldots, p_{N-1}) \leftarrow \mathcal{A}(\phi_1 \ldots \phi_{N-1})$
$p_N \leftarrow U_N |0\rangle^{\otimes\eta}$
$(a_0, \ldots, a_{N-1}) \leftarrow Y_{N-1} \equiv \frac{1}{\sqrt{N}}\left(1 - \sum_{j=1}^{N-1} X_j\right)|0\rangle^{\otimes(N-1)}$
for $i = 1, \ldots, N-1$ **do**
    Swap p_i and p_N controlled on a_i being in state $|1\rangle$
end for
for $i = 1, \ldots, N-1$ **do**
    $p_i \leftarrow U_N^\dagger p_i$
    Map a_i to $|0\rangle$ controlled on p_i being in state $|0\rangle^{\otimes\eta}$
    $p_i \leftarrow U_N p_i$
end for
return $\mathcal{A}(\phi_1 \ldots \phi_N)$

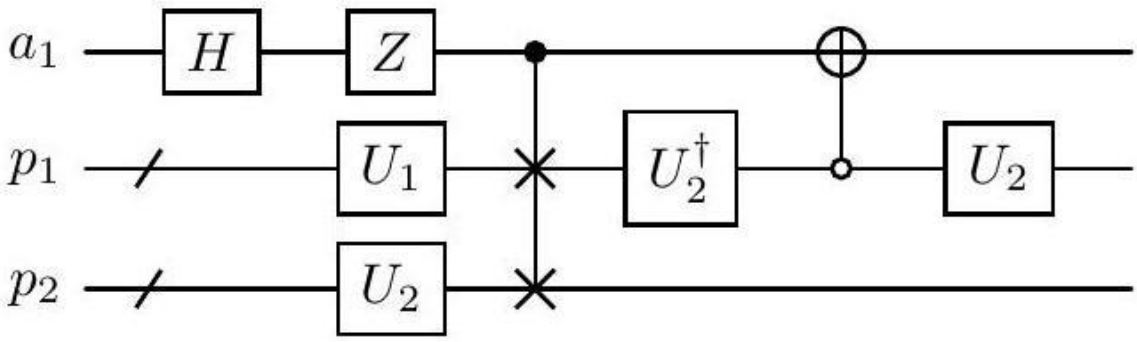

$$\frac{1}{\sqrt{3!}}[(\phi_1\phi_2\phi_3 - \phi_2\phi_1\phi_3)|00\rangle_a$$
$$-(\phi_3\phi_2\phi_1 - \phi_3\phi_1\phi_2)|10\rangle_a$$
$$-(\phi_1\phi_3\phi_2 - \phi_2\phi_3\phi_1)|01\rangle_a].$$

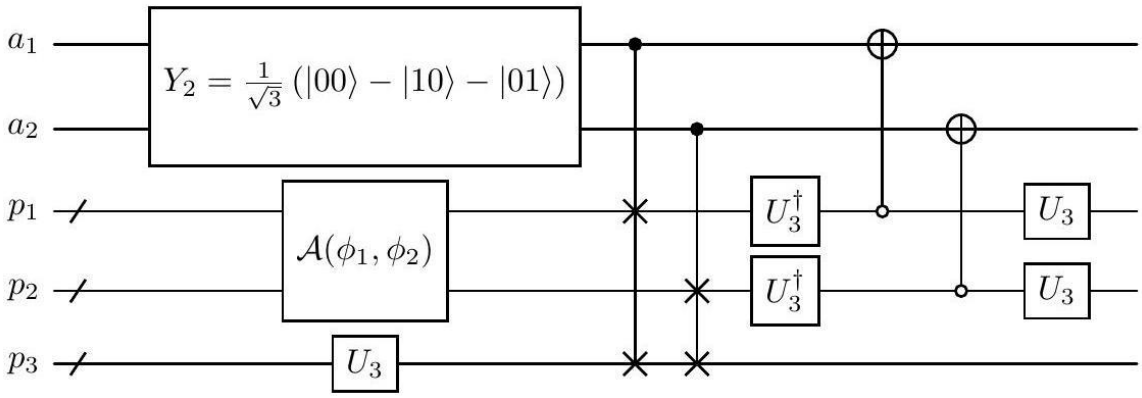
a_1
a_2
p_1
p_2
p_3
$Y_2 = \frac{1}{\sqrt{3}}(|00\rangle - |10\rangle - |01\rangle)$
$\mathcal{A}(\phi_1, \phi_2)$
U_3
$U_3^\dagger$
$U_3^\dagger$
U_3
U_3

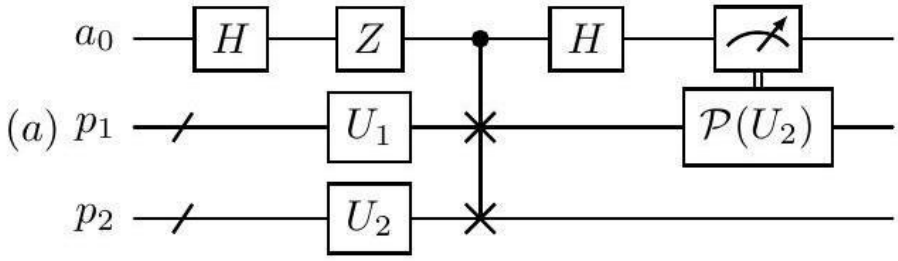
a_0
(a) p_1
p_2
H
Z
H
U_1
U_2
$\mathcal{P}(U_2)$

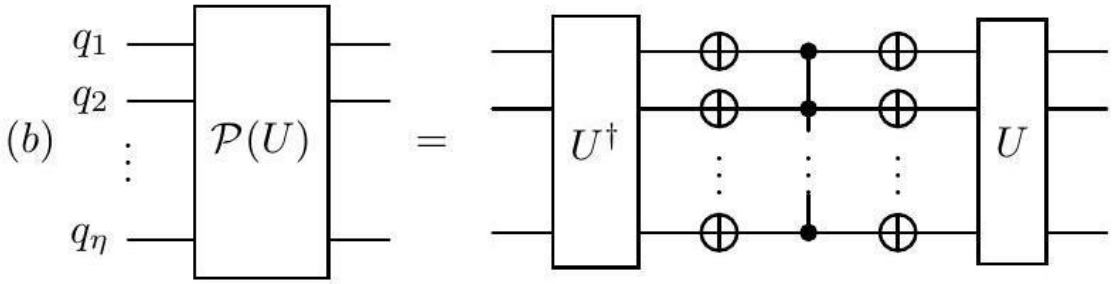
(b)
q_1
q_2
q_η
$\mathcal{P}(U)$
$=$
$U^\dagger$
U

Input: $\mathcal{A}(\phi_1 \dots \phi_{N-1})$, U_N
Output: $\mathcal{A}(\phi_1 \dots \phi_N)$
$(p_1, \dots, p_{N-1}) \leftarrow \mathcal{A}(\phi_1 \dots \phi_{N-1})$
$p_N \leftarrow U_N |0\rangle^{\otimes \eta}$
$(a_0, \dots, a_{N-1}) \leftarrow Y_{N-1} \equiv \frac{1}{\sqrt{N}} \left(1 - \sum_{j=1}^{N-1} X_j\right) |0\rangle^{\otimes (N-1)}$
for $i = 1, \dots, N-1$ **do**
    Swap p_i and p_N controlled on a_i being in state $|1\rangle$
end for
for $i = 1, \dots, N-1$ **do**
    $a_i \leftarrow H a_i$
    Measure $a_i \rightarrow c_i$
end for
if $\sum_j c_j \leq \lfloor N/2 \rfloor$ **then**
    for $i = 1, \dots, N-1$ **do**
        if $c_i = 1$ **then**
            $p_i \leftarrow \mathcal{P}(U_N) p_i$
        end if
    end for
end if
if $\sum_j c_j > \lfloor N/2 \rfloor$ **then**
    for $i = 1, \dots, N-1$ **do**
        if $c_i = 0$ **then**
            $p_i \leftarrow \mathcal{P}(U_N) p_i$
        end if
    end for
    $p_N \leftarrow \mathcal{P}(U_N) p_N$
end if
return $\mathcal{A}(\phi_1 \dots \phi_N)$

$$\langle N_{\text{corr}} \rangle = \sum_{n=2}^{N} \frac{1}{2^{n-1}} \sum_{k=0}^{n-1} \min(k, n-k) \binom{n-1}{k},$$

$$\mathcal{A}(|r_1 \dots r_N\rangle) = \frac{1}{\sqrt{N!}} \sum_{\sigma \in S_N} (-1)^{\pi(\sigma)} |\sigma(r_1, \dots, r_N)\rangle$$

$$(r_i, r_j) \rightarrow \left(\min(r_i, r_j), \max(r_i, r_j)\right)$$

$$|\Sigma_N\rangle = \frac{1}{\sqrt{N!}} \sum_{\sigma \in S_N} |\sigma(1, \dots, N)\rangle$$

$$N_{\text{comp}} = 2^{m-2}(m^2 - m + 4) - 1,$$

$$N_{\text{ctrl}} = \frac{1}{2}N(N-1),$$

$$|\phi_i\rangle = \sum_j c_{i,j}|r_j\rangle$$

$$\langle \phi_{i_1} \mid \phi_{i_2} \rangle = \delta_{i_1,i_2}$$

$$O\big(\log(N_s/\varepsilon)\big) \sim \left(\lambda \log\left(\frac{\log N_s}{\varepsilon}\right)\right)$$

$$O\left(\frac{N_s}{\lambda} + \lambda \log \frac{N_s}{\varepsilon} \log \frac{\log N_s}{\varepsilon}\right) T$$

$$O\big(\sqrt{N_s \log(1/\varepsilon)} + \log(1/\varepsilon)\big)T$$

$$R_y\left(2\arccos\sqrt{\frac{1}{3}}\right)T$$

$$F(\rho,\sigma) = (\mathrm{tr}\sqrt{\sqrt{\sigma}\rho\sqrt{\sigma}})^2$$

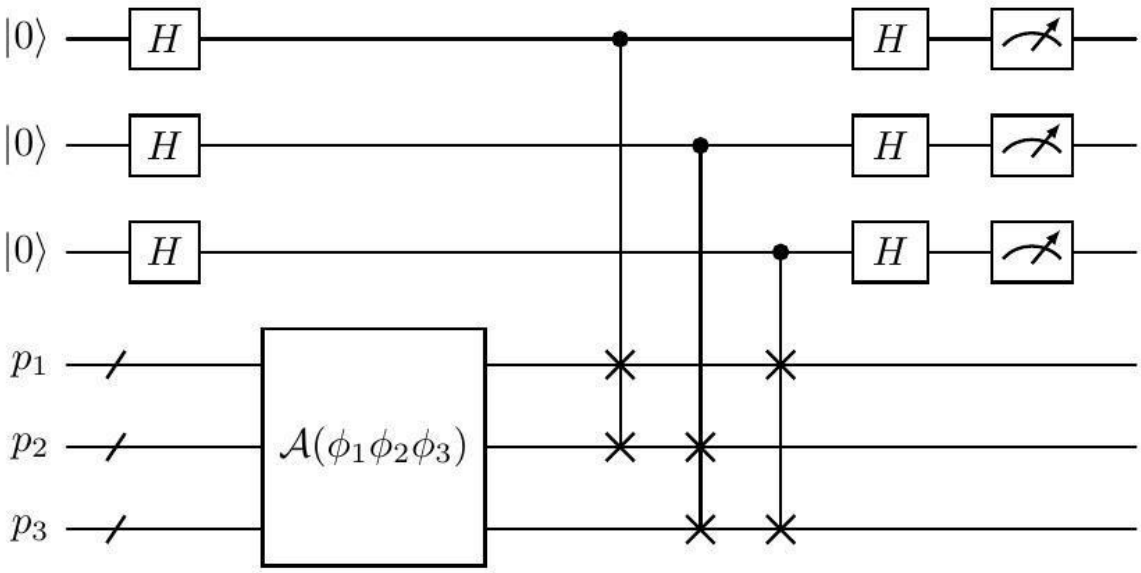

$$|Y_{N-1}\rangle \equiv \frac{1}{\sqrt{N}}\left(1 - \sum_{j=1}^{N-1} X_j\right)|0\rangle^{\otimes(N-1)}$$
$$= \frac{1}{\sqrt{N}}\left(|0\rangle^{\otimes(N-1)} - \sqrt{N-1}|W_{N-1}\rangle\right)$$

$$G(p) \equiv \begin{pmatrix} \sqrt{p} & -\sqrt{1-p} \\ \sqrt{1-p} & \sqrt{p} \end{pmatrix}$$

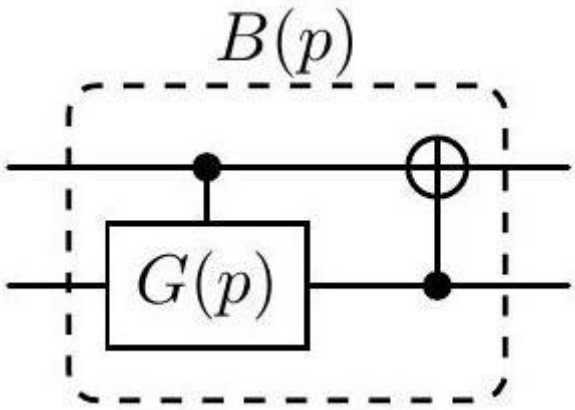

$$B(1/n), B(1/(n-1)), \dots, B(1/3), B(1/2)$$

$$|\tilde{Y}_n\rangle = \prod_{i=1}^{n-1} Z_i |Y_n\rangle$$

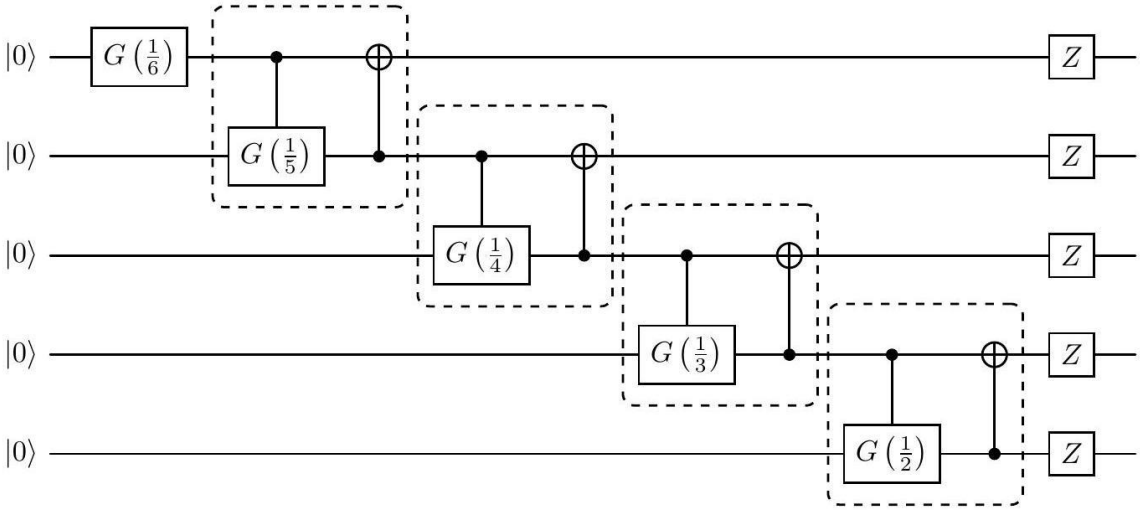

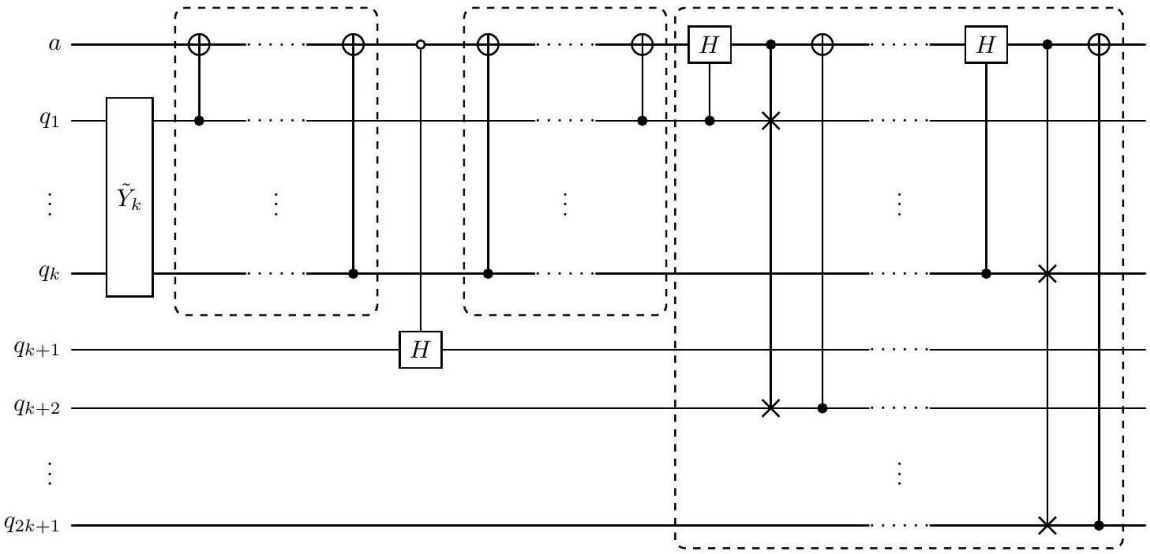

$$\left\{\sigma^{(x)} \to \sigma^{(z)}, \sigma^{(y)} \to -\sigma^{(x)}, \sigma^{(z)} \to -\sigma^{(y)}\right\}$$

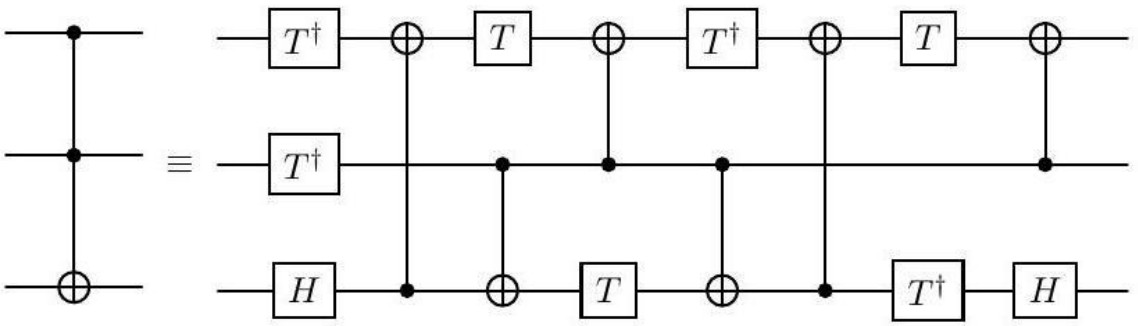
≡
$T^\dagger$
$T^\dagger$
H
T
T
$T^\dagger$
T
T
$T^\dagger$
H

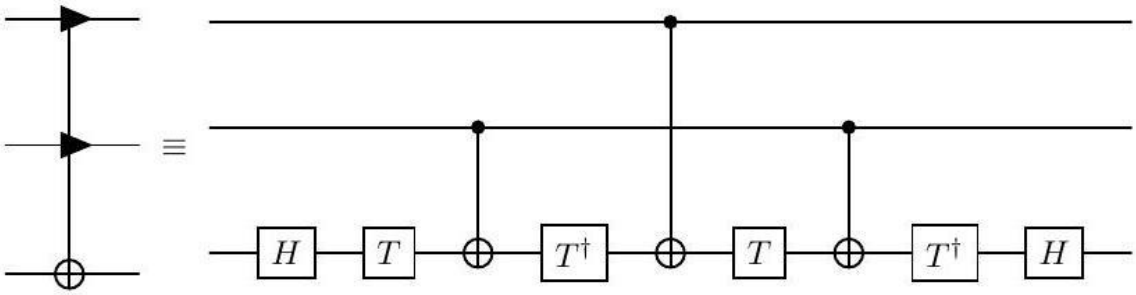
≡
H
T
$T^\dagger$
T
$T^\dagger$
H

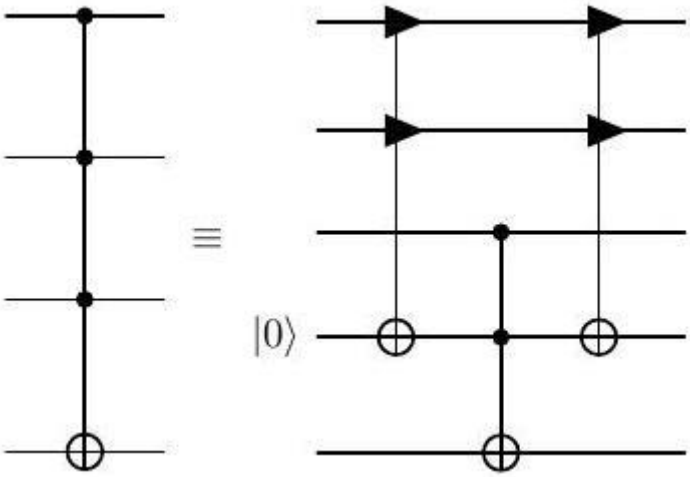
≡
$|0\rangle$

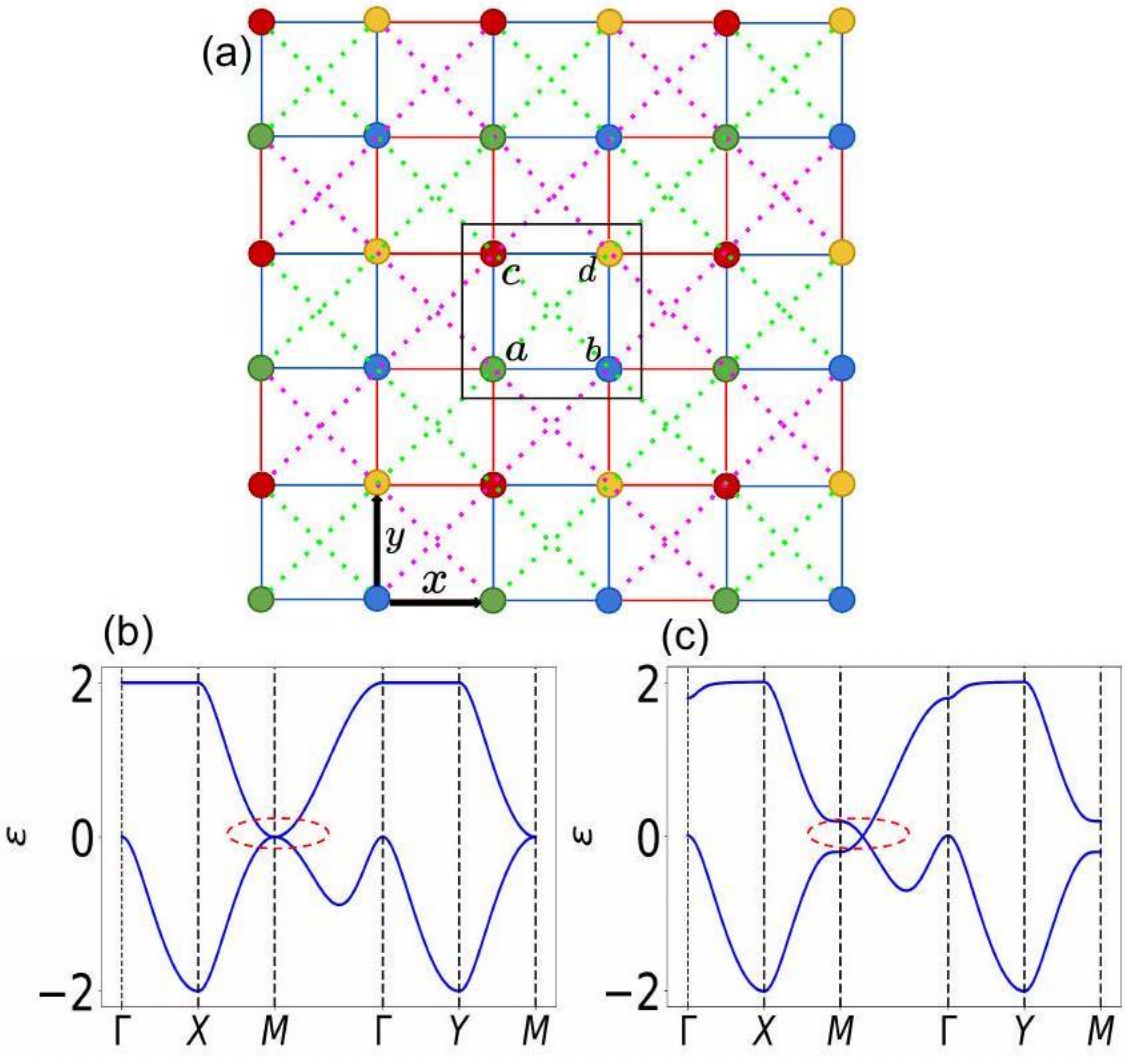

$$\Gamma = \left(\frac{\pi}{2}, \frac{\pi}{2}\right), X = \left(\pi, \frac{\pi}{2}\right), Y = \left(\frac{\pi}{2}, \pi\right), \text{and } M = (\pi, \pi)$$

$$\hat{\mathcal{H}} = -\sum_{i,j} \left(t_{ij} c_i^\dagger c_j + \text{ h.c. }\right) + \delta \sum_{i\in\{a,d\}} c_i^\dagger c_i - \delta \sum_{i\in\{b,c\}} c_i^\dagger c_i$$
$$+U \sum_{\langle i,j\rangle} n_i n_j + V \sum_{\langle\langle i,j\rangle\rangle} n_i n_j$$

$$\hat{n}_i \hat{n}_j \simeq \langle \hat{n}_i \rangle \hat{n}_j + \langle \hat{n}_j \rangle \hat{n}_i - \langle \hat{n}_i \rangle \langle \hat{n}_j \rangle - \epsilon_{ji} \hat{c}_i^\dagger \hat{c}_j - \epsilon_{ij} \hat{c}_j^\dagger \hat{c}_i + \left|\epsilon_{ij}\right|^2.$$

$$\begin{aligned}
\epsilon_{\text{QAH}} &= \frac{1}{4} |\text{Im}(\epsilon_{ab} + \epsilon_{bd} + \epsilon_{dc} + \epsilon_{ca})|, \\
\delta_{\text{SNI}} &= |(n_a + n_d) - (n_b + n_c)|, \\
\delta_{\text{CDW}} &= |n_a - n_d| + |n_b - n_c|, \\
\Delta_{\text{bond}}^1 &= \left|\left\langle c_{a+\hat{x}+\hat{y}}^\dagger c_a \right\rangle\right| - \left|\left\langle c_{a+\hat{x}-\hat{y}}^\dagger c_a \right\rangle\right|, \\
\Delta_{\text{bond}}^2 &= \left|\left\langle c_{b+\hat{x}+\hat{y}}^\dagger c_b \right\rangle\right| - \left|\left\langle c_{b+\hat{x}-\hat{y}}^\dagger c_b \right\rangle\right|, \\
\Delta_{\text{bond}} &= \left|\left|\Delta_{\text{bond}}^1\right| - \left|\Delta_{\text{bond}}^2\right|\right|
\end{aligned}$$

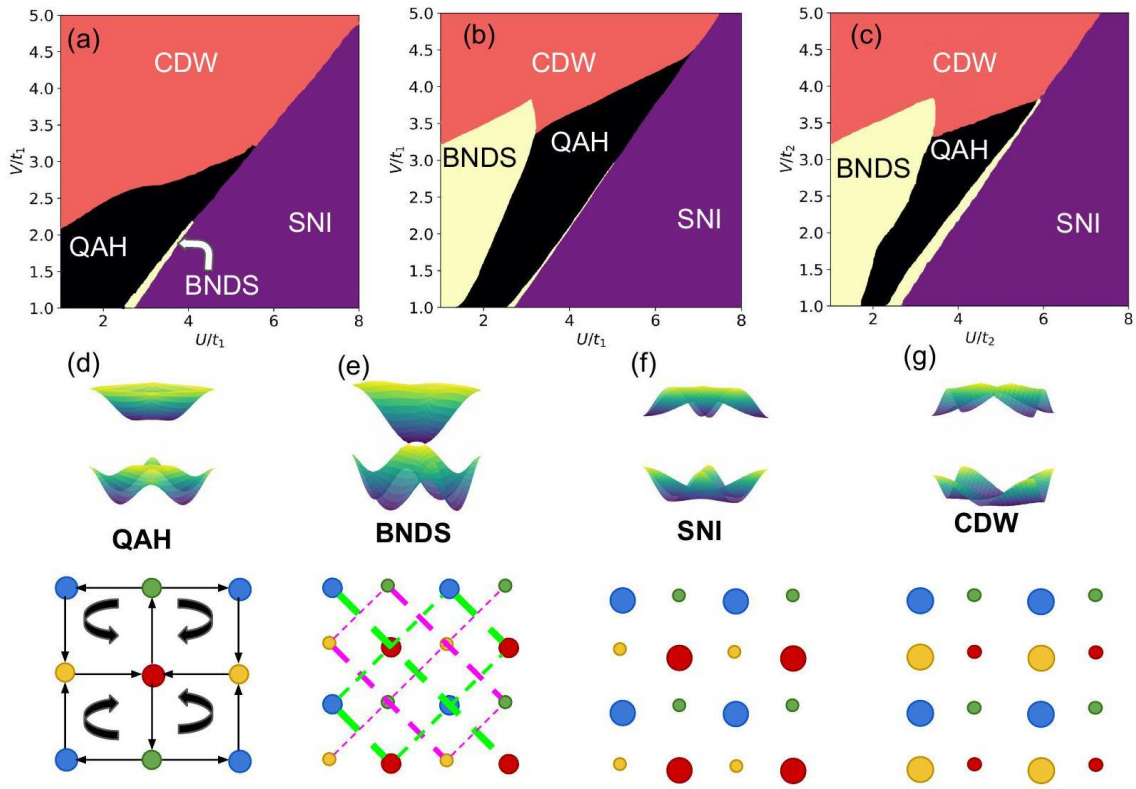

$$\langle \hat{c}_b^\dagger \hat{c}_a \rangle = \langle \hat{c}_b^\dagger \hat{c}_{a+2\hat{x}} \rangle, \qquad \langle \hat{c}_c^\dagger \hat{c}_a \rangle = \langle \hat{c}_c^\dagger \hat{c}_{a+2\hat{y}} \rangle,$$
$$\langle \hat{c}_d^\dagger \hat{c}_c \rangle = \langle \hat{c}_d^\dagger \hat{c}_{c+2\hat{x}} \rangle, \qquad \langle \hat{c}_d^\dagger \hat{c}_b \rangle = \langle \hat{c}_d^\dagger \hat{c}_{b+2\hat{y}} \rangle,$$

$$\hat{H} = E_0 + \sum_{\mathbf{k}} \Psi_{\mathbf{k}}^\dagger H_{\mathrm{HF}}^{\mathbf{k}} \Psi_{\mathbf{k}},$$

$$\Psi_{\mathbf{k}} = \begin{pmatrix} \hat{c}_{\mathbf{k},a} \\ \hat{c}_{\mathbf{k},b} \\ \hat{c}_{\mathbf{k},c} \\ \hat{c}_{\mathbf{k},d} \end{pmatrix}$$

$$H_{00}^{\mathbf{k}} = 2U(\bar{n}_b + \bar{n}_c) + 4V\bar{n}_d + \delta,$$
$$H_{11}^{\mathbf{k}} = 2U(\bar{n}_a + \bar{n}_d) + 4V\bar{n}_c - \delta,$$
$$H_{22}^{\mathbf{k}} = 2U(\bar{n}_a + \bar{n}_d) + 4V\bar{n}_b - \delta,$$
$$H_{33}^{\mathbf{k}} = 2U(\bar{n}_c + \bar{n}_b) + 4V\bar{n}_a + \delta.$$

$$H_{01}^{\mathrm{k}} = -t_1 e^{-k_x} - t_2 e^{k_x} - 2U\epsilon_{ab}^R \cos\, k_x - 2iV\epsilon_{ab}^I \cos\, k_x$$
$$H_{02}^{\mathrm{k}} = -t_1 e^{-k_y} - t_2 e^{k_y} - 2U\epsilon_{ac}^R \cos\, k_y - 2iV\epsilon_{ac}^I \cos\, k_y$$
$$H_{13}^{\mathrm{k}} = -t_1 e^{-k_y} - t_2 e^{k_y} - 2U\epsilon_{bd}^R \cos\, k_y - 2iV\epsilon_{bd}^I \cos\, k_y$$
$$H_{23}^{\mathrm{k}} = -t_1 e^{-k_x} - t_2 e^{k_x} - 2U\epsilon_{cd}^R \cos\, k_x - 2iV\epsilon_{cd}^I \cos\, k_x$$
$$H_{03}^{\mathrm{k}} = 2(t_1' - V\epsilon_{ad}^1)\cos(k_x + k_y) + 2(t_2' - V\epsilon_{ad}^2)\cos(k_x - k_y)$$
$$H_{12}^{\mathrm{k}} = 2(t_2' - V\epsilon_{bc}^1)\cos(k_x + k_y) + 2(t_1' - V\epsilon_{bc}^2)\cos(k_x - k_y)$$

$$E_0 = 2U[|\epsilon_{ab}|^2 + |\epsilon_{cd}|^2 + |\epsilon_{bd}|^2 + |\epsilon_{ac}|^2 - (\bar{n}_a + \bar{n}_d)(\bar{n}_b + \bar{n}_c)] + 2V\left[\left|\epsilon_{ad}^1\right|^2 + \left|\epsilon_{ad}^2\right|^2 + \left|\epsilon_{bc}^1\right|^2 + \left|\epsilon_{bc}^2\right|^2 - 2(\bar{n}_a\bar{n}_d + \bar{n}_b\bar{n}_c)\right].$$

$$E_k^{1,2} = -t\left(1 \pm \sqrt{3 + 2\cos(k_x) + 4\cos(k_x/2)\cos\left(\sqrt{3}k_y/2\right)}\right)$$

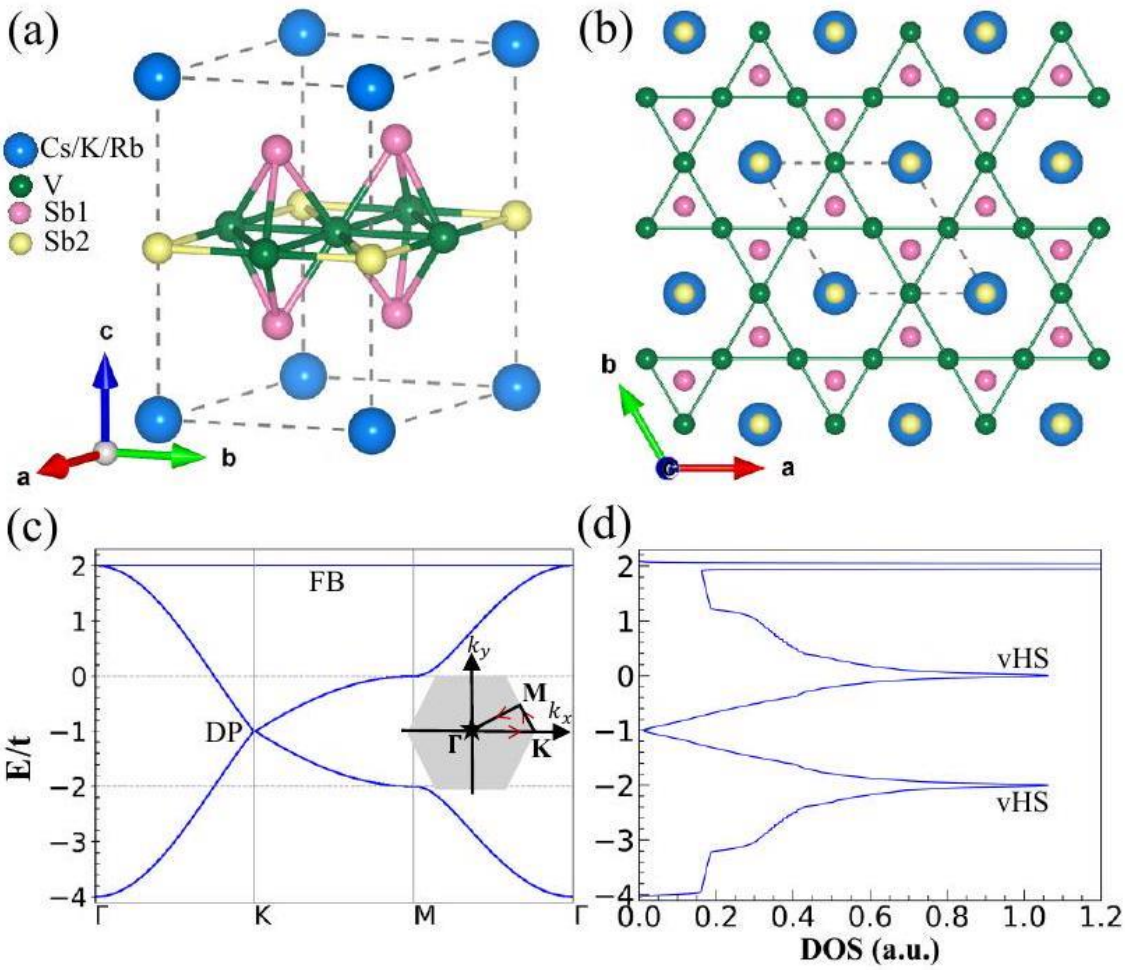

$$\mathcal{H} = -t\sum_{\langle ij\rangle,\sigma}\left(c_{i\sigma}^{\dagger}c_{j\sigma} + \text{H.c.}\right) - \sum_{i,\sigma}(\mu_0 + \xi_i\mu_{\text{co}})c_{i\sigma}^{\dagger}c_{i\sigma} - \text{i}t_{lc}\sum_{\langle ij\rangle,\sigma}\left(c_{i\sigma}^{\dagger}c_{j\sigma} - \text{H.c.}\right) - U_s\sum_i n_{i\uparrow}n_{i\downarrow} - \frac{U_t}{2}\sum_{i,j,\sigma,\sigma'} n_{i\sigma}n_{j\sigma'}$$

$$
\begin{aligned}
\mathcal{H}^{\mathrm{MF}} = & -t \sum_{\langle ij\rangle,\sigma} \left(c_{i\sigma}^{\dagger} c_{j\sigma} + \text{ H.c. }\right) - \sum_{i,\sigma} \left(\mu_0 + \xi_i \mu_{\mathrm{co}}\right) c_{i\sigma}^{\dagger} c_{i\sigma} \\
& - \mathrm{i} t_{lc} \sum_{\langle ij\rangle,\sigma} \left(c_{i\sigma}^{\dagger} c_{j\sigma} - \text{ H.c. }\right) + \sum_{i} \left(\Delta_i c_{i\uparrow}^{\dagger} c_{i\downarrow}^{\dagger} + \text{ H.c. }\right) \\
& + \frac{1}{2} \sum_{\langle ij\rangle,\sigma,\sigma'} \left(\Delta_{ij\sigma\sigma'} c_{i\sigma}^{\dagger} c_{j\sigma'}^{\dagger} + \text{ H.c. }\right) + \sum_{i,\sigma} \Gamma_{i\sigma}^{\mathrm{H}} c_{i\sigma}^{\dagger} c_{i\sigma} \\
& + \frac{1}{2} \sum_{\langle ij\rangle,\sigma} \Gamma_{ij}^{\mathrm{H}} c_{i\sigma}^{\dagger} c_{i\sigma} - \frac{1}{2} \sum_{\langle ij\rangle,\sigma,\sigma'} \Gamma_{ij\sigma\sigma'}^{\mathrm{F}} c_{i\sigma}^{\dagger} c_{j\sigma'}
\end{aligned}
$$

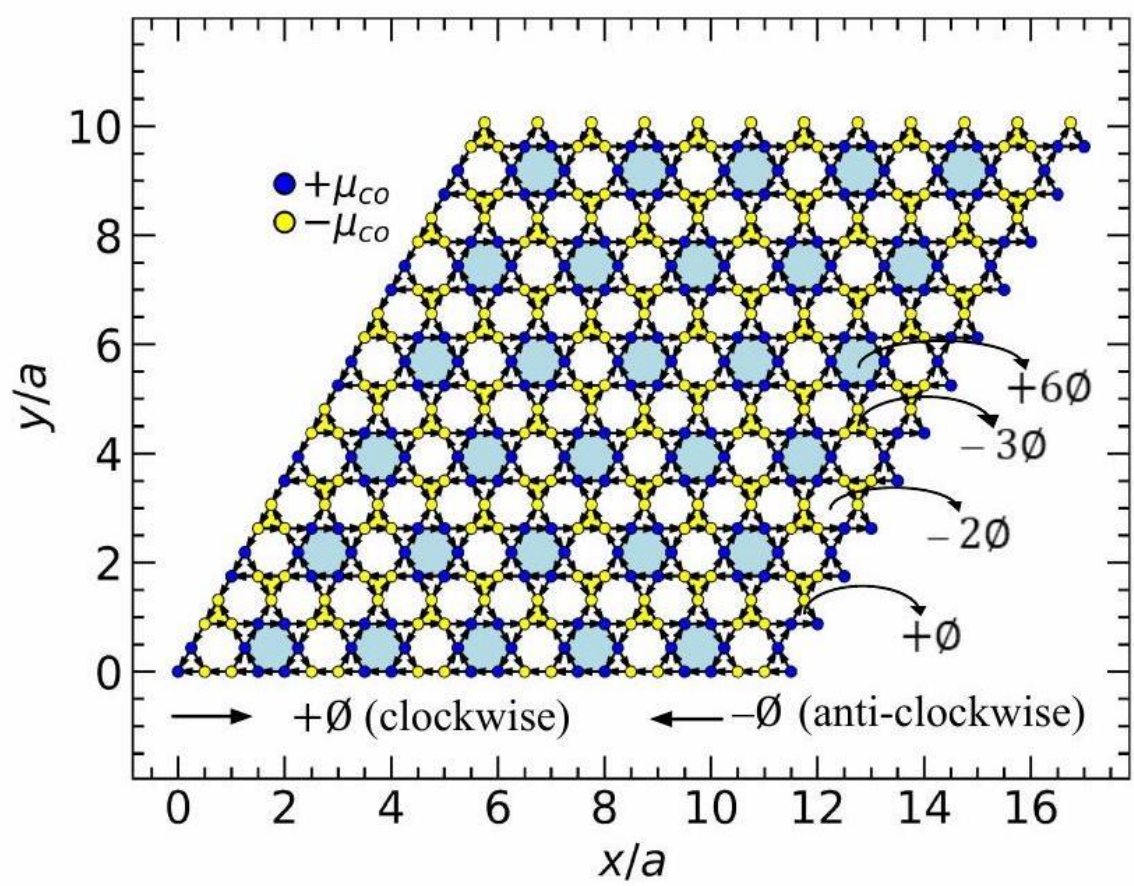

$$\Delta_i = -U_s \langle c_{i\uparrow} c_{i\downarrow}\rangle, \Delta_{ij\sigma\sigma'} = -(U_t/2)\langle c_{i\sigma} c_{j\sigma'}\rangle, \Gamma_{i\sigma}^{\mathrm{H}} = -U_s \langle c_{i\sigma}^{\dagger} c_{i\sigma}\rangle, \Gamma_{ij}^{\mathrm{H}} = -U_t \sum_{\sigma} \langle c_{j\sigma}^{\dagger} c_{j\sigma}\rangle$$

$$\Gamma_{ij\sigma\sigma'}^{\mathrm{F}} = -(U_t/2)\langle c_{i\sigma}^{\dagger} c_{j\sigma'}\rangle$$

$$c_{i\sigma} = \sum_{n} u_{n\sigma}^{i} \gamma_n + v_{n\sigma}^{i*} \gamma_n^{\dagger}$$

$$\sum_{j} \mathcal{H}_{ij}^{\mathrm{BdG}} \psi_n^{j} = E_n \psi_n^{i}$$

$$\mathcal{H}_{ij}^{\mathrm{BdG}} = \begin{pmatrix} \Lambda_{\uparrow\uparrow}^{ij} & \Lambda_{\uparrow\downarrow}^{ij} & \Delta_{ij\uparrow\uparrow} & \Delta_{i\uparrow\downarrow} + \Delta_{ij\uparrow\downarrow} \\ \Lambda_{\downarrow\uparrow}^{ij} & \Lambda_{\downarrow\downarrow}^{ij} & \Delta_{i\downarrow\uparrow} + \Delta_{ij\downarrow\uparrow} & \Delta_{ij\downarrow\downarrow} \\ \Delta_{ij\uparrow\uparrow}^{*} & \Delta_{i\downarrow\uparrow}^{*} + \Delta_{ij\downarrow\uparrow}^{*} & -\Lambda_{\uparrow\uparrow}^{ij*} & -\Lambda_{\uparrow\downarrow}^{ij*} \\ \Delta_{i\uparrow\downarrow}^{*} + \Delta_{ij\uparrow\downarrow}^{*} & \Delta_{ij\downarrow\downarrow}^{*} & -\Lambda_{\downarrow\uparrow}^{ij*} & -\Lambda_{\downarrow\downarrow}^{ij*} \end{pmatrix}$$

$$\psi_n^i = \left[u_{n\uparrow}^i, u_{n\downarrow}^i, v_{n\uparrow}^i, v_{n\downarrow}^i\right]^T$$

$$\Lambda_{\sigma\sigma'}^{ij} = \left(-t - it_{lc} - \frac{1}{2}\Gamma_{ij\sigma\sigma'}^{\mathrm{F}}\right)(1-\delta_{ij})\delta_{\sigma\sigma'} - \left(\mu_0 + \xi_i\mu_{\mathrm{co}} + \Gamma_{ii}^{H} + \frac{1}{2}\Gamma_{ij}^{\mathrm{H}}\right)\delta_{ij}\delta_{\sigma\sigma'}$$

$$-\frac{1}{2}\Gamma_{ij\sigma\sigma'}^{\mathrm{F}}(1-\delta_{ij}), \delta_{ij}$$

$$\begin{aligned}
\Delta_i &= -U_s\langle c_{i\uparrow}c_{i\downarrow}\rangle \\
&= -U_s\sum_n \left[u_{n\uparrow}^i v_{n\downarrow}^{i*}(1-f(E_n)) + u_{n\downarrow}^i v_{n\uparrow}^{i*} f(E_n)\right] \\
&= -\frac{U_s}{2}\sum_n \left[u_{n\uparrow}^i v_{n\downarrow}^{i*} - u_{n\downarrow}^i v_{n\uparrow}^{i*}\right]\tanh\left(\frac{E_n}{2k_BT}\right),
\end{aligned}$$

$$\begin{aligned}
\Delta_{ij\sigma\sigma'} &= -\frac{U_t}{2}\langle c_{i\sigma}c_{j\sigma'}\rangle \\
&= -\frac{U_t}{2}\sum_n \left[u_{n\sigma}^i v_{n\sigma'}^{j*}(1-f(E_n)) + u_{n\sigma'}^j v_{n\sigma}^{i*} f(E_n)\right] \\
&= -\frac{U_t}{4}\sum_n \left[u_{n\sigma}^i v_{n\sigma'}^{j*} - u_{n\sigma'}^j v_{n\sigma}^{i*}\right]\tanh\left(\frac{E_n}{2k_BT}\right),
\end{aligned}$$

$$\begin{aligned}
\Gamma_{i,\sigma}^{\mathrm{H}} &= -U_s\langle c_{i\sigma}^{\dagger}c_{i\sigma}\rangle \\
&= -U_s\sum_n \left|v_{n\sigma}^i\right|^2\left[(1-f(E_n)) + \left|u_{n\sigma}^i\right|^2 f(E_n)\right] \\
&= -\frac{U_s}{2}\sum_n \left[\left|v_{n\sigma}^i\right|^2 - \left|u_{n\sigma}^i\right|^2\right]\tanh\left(\frac{E_n}{2k_BT}\right)
\end{aligned}$$

$$\begin{aligned}
\Gamma_{ij}^{\mathrm{H}} &= -U_t\sum_\sigma \langle c_{j\sigma}^{\dagger}c_{j\sigma}\rangle \\
&= -U_t\sum_\sigma\sum_n \left[\left|v_{n\sigma}^j\right|^2(1-f(E_n)) + \left|u_{n\sigma}^j\right|^2 f(E_n)\right] \\
&= -\frac{U_t}{2}\sum_{n,\sigma} \left[\left|v_{n\sigma}^j\right|^2 - \left|u_{n\sigma}^j\right|^2\right]\tanh\left(\frac{E_n}{2k_BT}\right),
\end{aligned}$$

$$\begin{aligned}
\Gamma_{ij\sigma\sigma'}^{\mathrm{F}} &= -\frac{U_t}{2}\langle c_{i\sigma}^{\dagger}c_{j\sigma'}\rangle \\
&= -\frac{U_t}{2}\sum_n \left[v_{n\sigma}^i v_{n\sigma'}^{j*}(1-f(E_n)) + u_{n\sigma}^{i*} u_{n\sigma'}^j f(E_n)\right] \\
&= -\frac{U_t}{4}\sum_n \left[v_{n\sigma}^i v_{n\sigma'}^{j*} - u_{n\sigma}^{i*} u_{n\sigma'}^j\right]\tanh\left(\frac{E_n}{2k_BT}\right)
\end{aligned}$$

$$f(E_n) = 1/\left(1 + \exp\left(E_n/k_B T\right)\right)$$

$$\langle \gamma_n^\dagger \gamma_n \rangle = f(E_n) \text{ and } \langle \gamma_n \gamma_n^\dagger \rangle = 1 - f(E_n), T$$

$$\Delta_i^{s,\text{on}} = U_s \langle c_{i\uparrow} c_{i\downarrow} \rangle,$$

$$\Delta_{ij}^{s,\text{NN}} = -\frac{U_t}{2} \langle c_{i\downarrow} c_{j\uparrow} - c_{i\uparrow} c_{j\downarrow} \rangle,$$

$$\Delta_{ij\sigma\sigma}^{t,\text{NN}} = -U_t \langle c_{i\sigma} c_{j\sigma} \rangle,$$

$$\Delta_{ij\uparrow\downarrow}^{t,\text{NN}} = -\frac{U_t}{2} \langle c_{i\downarrow} c_{j\uparrow} - c_{i\uparrow} c_{j\downarrow} \rangle$$

$$C(\mathbf{q}) = \frac{1}{N} \sum_{i,j} \langle \Delta_i \Delta_j \rangle e^{-i\mathbf{q}\cdot\mathbf{r}_{ij}}$$

$$\rho_i(E) = \sum_n \left[\left| u_{n\sigma}^i \right|^2 \delta(E - E_n) + \left| v_{n\sigma}^i \right|^2 \delta(E + E_n) \right]$$

$$H_{\text{RSOC}} = -\frac{\mathrm{i}\lambda}{2a} \sum_{\langle ij \rangle, \sigma, \sigma'} \left(\boldsymbol{\sigma} \times \hat{d}_{ij} \right)_{\sigma\sigma'}^z c_{i\sigma}^\dagger c_{j\sigma'},$$

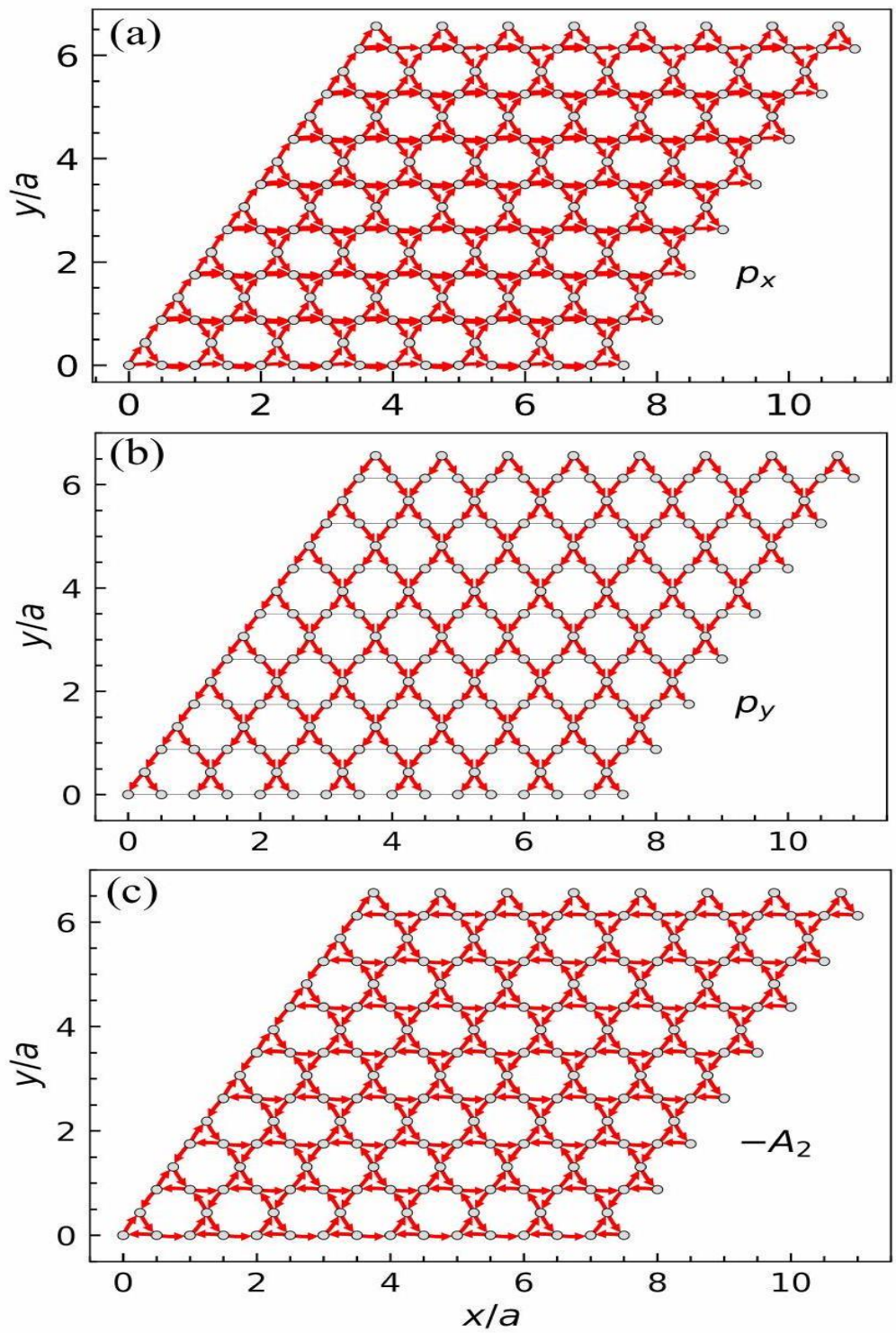
(a)
p_x
(b)
p_y
(c)
$-A_2$
y/a
x/a
0
2
4
6
8
10

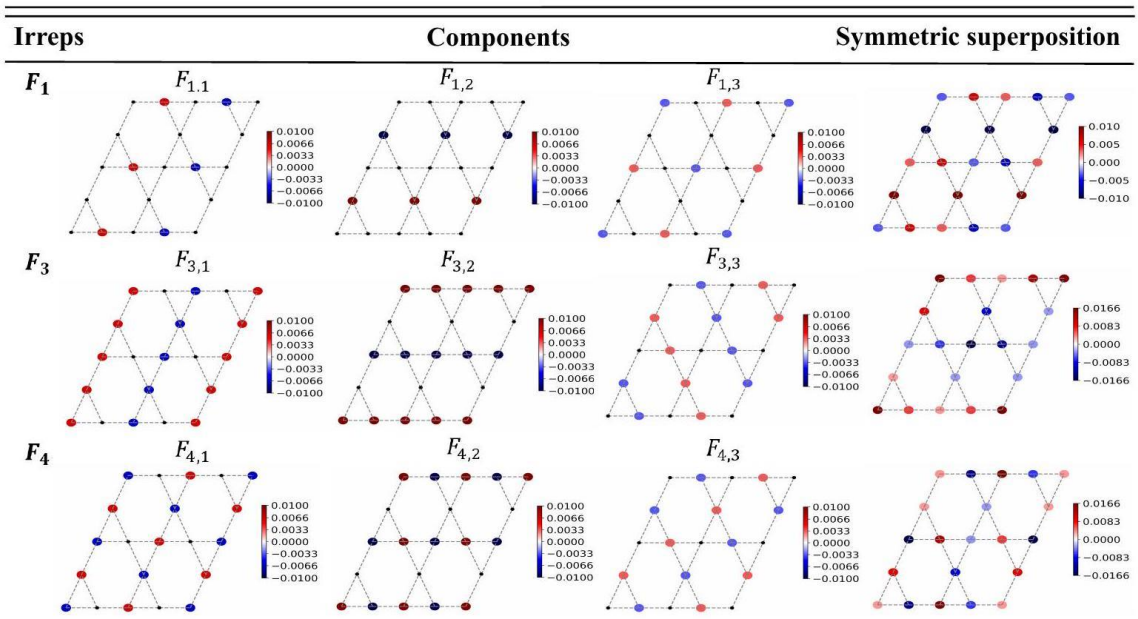
Irreps
Components
Symmetric superposition
F_1
$F_{1,1}$
$F_{1,2}$
$F_{1,3}$
F_3
$F_{3,1}$
$F_{3,2}$
$F_{3,3}$
F_4
$F_{4,1}$
$F_{4,2}$
$F_{4,3}$

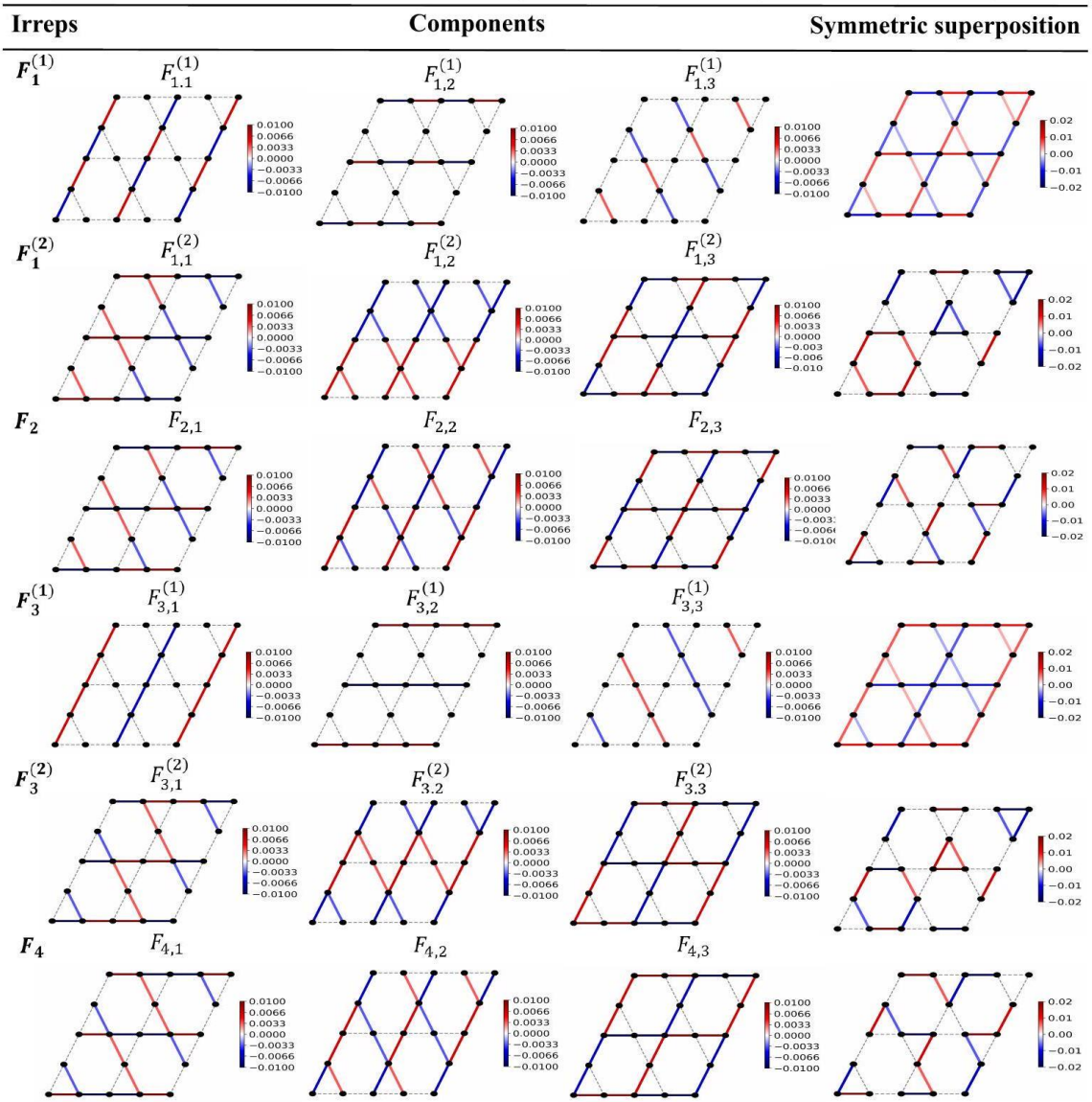
Irreps
Components
Symmetric superposition
$F_1^{(1)}$
$F_{1,1}^{(1)}$
$F_{1,2}^{(1)}$
$F_{1,3}^{(1)}$
$F_1^{(2)}$
$F_{1,1}^{(2)}$
$F_{1,2}^{(2)}$
$F_{1,3}^{(2)}$
F_2
$F_{2,1}$
$F_{2,2}$
$F_{2,3}$
$F_3^{(1)}$
$F_{3,1}^{(1)}$
$F_{3,2}^{(1)}$
$F_{3,3}^{(1)}$
$F_3^{(2)}$
$F_{3,1}^{(2)}$
$F_{3,2}^{(2)}$
$F_{3,3}^{(2)}$
F_4
$F_{4,1}$
$F_{4,2}$
$F_{4,3}$

Irreps	Components			Symmetric superposition
$\boldsymbol{F_1}$	$F_{1,1}$	$F_{1,2}$	$F_{1,3}$	
$\boldsymbol{F_2^{(1)}}$	$F_{2,1}^{(1)}$	$F_{2,2}^{(1)}$	$F_{2,3}^{(1)}$	
$\boldsymbol{F_2^{(2)}}$	$F_{2,1}^{(2)}$	$F_{2,2}^{(2)}$	$F_{2,3}^{(2)}$	
$\boldsymbol{F_3}$	$F_{3,1}$	$F_{3,2}$	$F_{3,3}$	
$\boldsymbol{F_4^{(1)}}$	$F_{4,1}^{(1)}$	$F_{4,2}^{(1)}$	$F_{4,3}^{(1)}$	
$\boldsymbol{F_4^{(2)}}$	$F_{4,1}^{(2)}$	$F_{4,2}^{(2)}$	$F_{4,3}^{(2)}$	

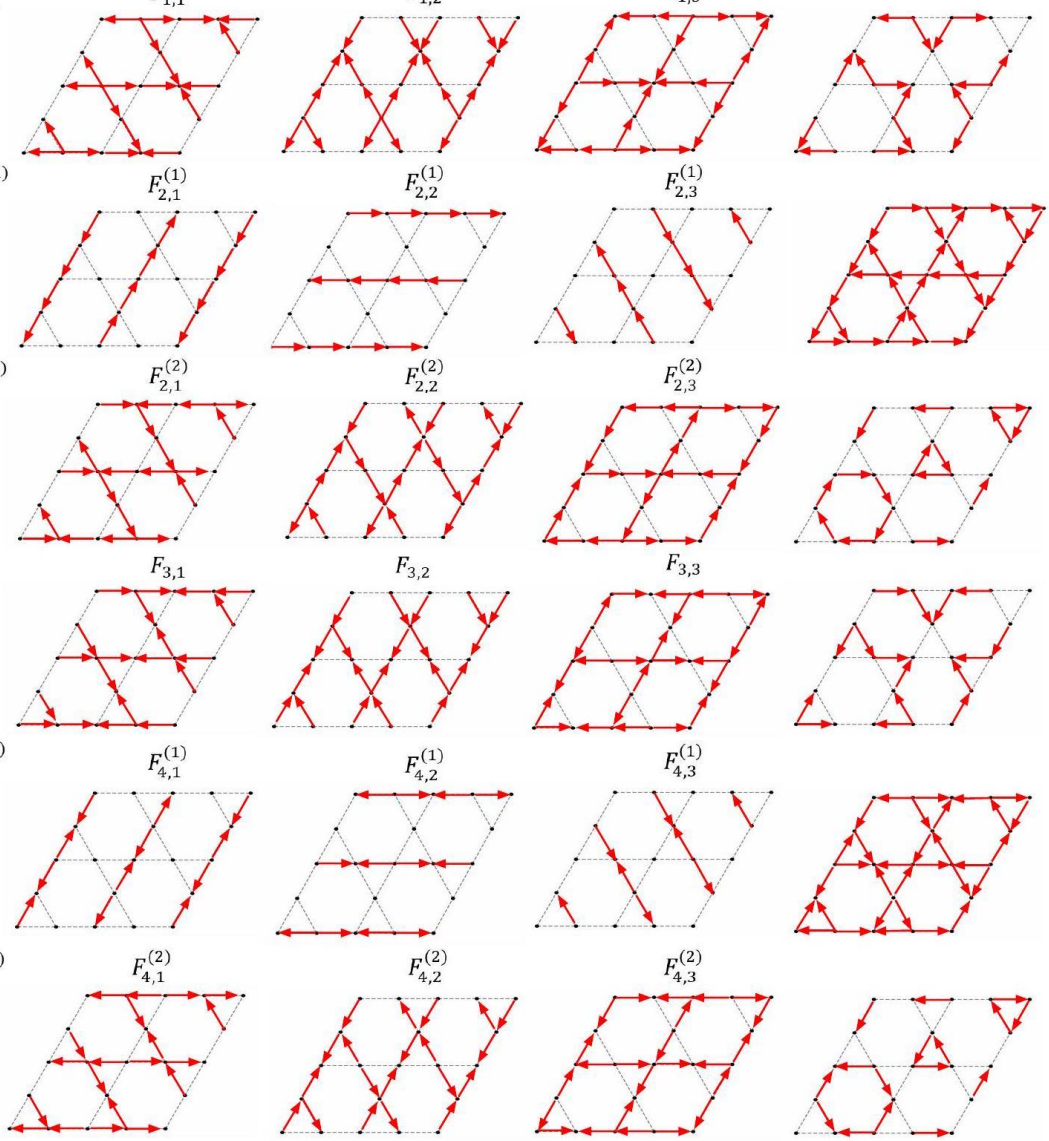

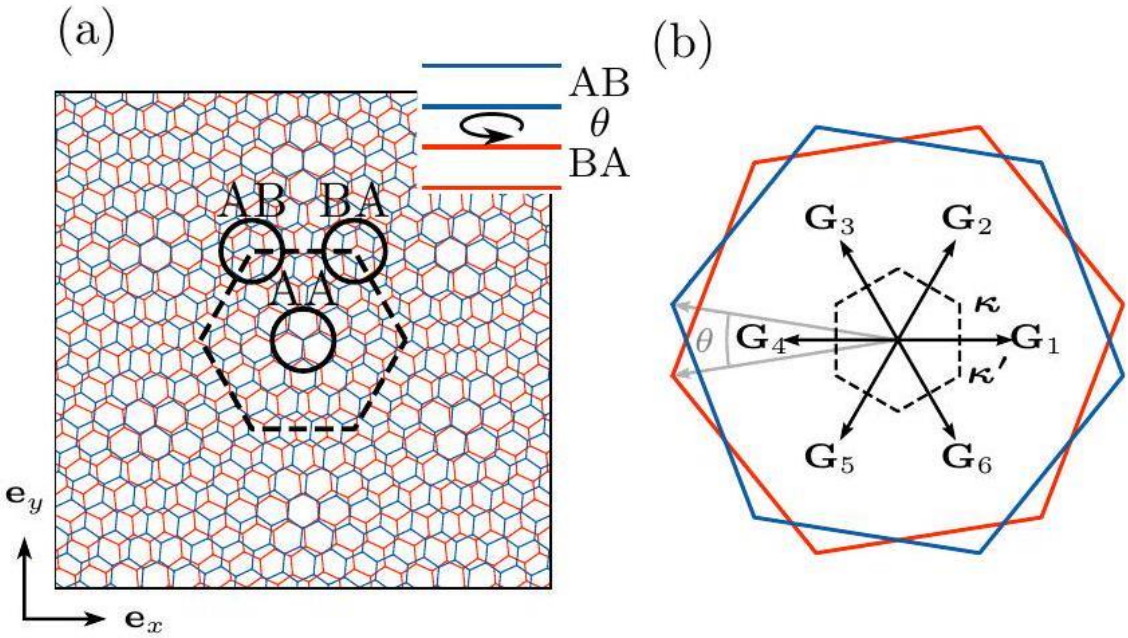

$$\mathcal{H}_{\text{kin}} = \sum_{\mathbf{q}} f_{\mathbf{q}}^{\dagger}(h_{\Gamma}(\mathbf{q}) + h_0) f_{\mathbf{q}} + \sum_{\mathbf{q}} \sum_{j=1}^{6} f_{\mathbf{q}+\mathbf{G}_j}^{\dagger} h_1(\mathbf{G}_j) f_{\mathbf{q}},$$

$$h_{\Gamma}(\mathbf{q}) = -\frac{\hbar^2 \mathbf{q}^2}{2m_{\Gamma}} \mathbb{1}_4$$

$$\mathcal{H}_{\text{int}} = -\frac{1}{2A} \sum_{\mathbf{q}} V_{\mathbf{q}} : \rho_{\mathbf{q}} \rho_{-\mathbf{q}} :$$

$$A = \sqrt{3} a_0^2 L^2 / 8 \sin^2 (\theta/2)$$

$$\rho_{\mathbf{q}} = \sum_{\mathbf{k}} c_{\mathbf{k}}^{\dagger} \Lambda(\mathbf{k}, \mathbf{q}) c_{\mathbf{k}+\mathbf{q}}$$

$$\Lambda_{m,s;n,s'}(\mathbf{k}, \mathbf{q}) = \langle u_{\mathbf{k},m} \mid u_{\mathbf{k}+\mathbf{q},n} \rangle \delta_{s,s'}$$

$$V_{\mathbf{q}} = \frac{e^2}{2\epsilon_0 \epsilon_{\text{eff}} |\mathbf{q}|} \tanh (|\mathbf{q}| d)$$

$$\mathcal{H} = \tilde{\mathcal{H}}_{\text{kin}} + \mathcal{H}_{\text{int}},$$

$$\tilde{\mathcal{H}}_{\text{kin}} = \sum_{\mathbf{k}} c_{\mathbf{k}}^{\dagger} h(\mathbf{k}) c_{\mathbf{k}}$$

$$d_{12}(p) = d_{12}(0) + \Delta d_{\perp}(p),\ d_{23}(p) = d_{23}(0) + \Delta d_{\perp}(p)$$

$$\begin{pmatrix} V_{12}(p) \\ V_{23}^{(0)}(p) \\ V_{23}^{(1)}(p) \end{pmatrix} = \mathrm{e}^{-\beta \Delta d_{\perp}} \begin{pmatrix} V_{12}(0) \\ V_{23}^{(0)}(0) \\ V_{23}^{(1)}(0) \end{pmatrix}$$

$$\begin{pmatrix} V_{12}(p) \\ V_{23}^{(0)}(p) \\ V_{23}^{(1)}(p) \end{pmatrix} = \left(1 + \frac{p}{p_0}\right) \begin{pmatrix} V_{12}(0) \\ V_{23}^{(0)}(0) \\ V_{23}^{(1)}(0) \end{pmatrix} + O(p^2)$$

$$S(\epsilon, \phi) = R(\phi)^{-1} \begin{pmatrix} \epsilon & 0 \\ 0 & -v_{\mathrm{P}}\epsilon \end{pmatrix} R(\phi)$$

$$M(\theta, \epsilon) = R(\theta)(1 + S(\epsilon, 0))$$

$$\mathbf{g}_{i,\mathrm{t/b}} = M(\mp\theta/2, \pm\epsilon/2)\mathbf{g}_i$$

$$h_{\Gamma}(\mathbf{q}) = -\frac{\hbar^2}{2m_{\Gamma}} \begin{pmatrix} \left(M\left(0, -\frac{\epsilon}{2}\right)\mathbf{q}\right)^2 \mathbb{1}_2 & 0 \\ 0 & \left(M\left(0, +\frac{\epsilon}{2}\right)\mathbf{q}\right)^2 \mathbb{1}_2 \end{pmatrix}$$

$$P_{ns,n's'}(\mathbf{k}) = \langle c_{\mathbf{k}n's'}^{\dagger} c_{\mathbf{k}ns} \rangle$$

$$\mathcal{H}_{\mathrm{HF}}[P](\mathbf{k}) = h(\mathbf{k}) + h_{\mathrm{H}}[P](\mathbf{k}) + h_{\mathrm{F}}[P](\mathbf{k})$$

$$h_{\mathrm{H}}[P](\mathbf{k}) = \sum_{\mathbf{G}} \frac{V_{\mathbf{G}}}{A} \Lambda(\mathbf{k}, \mathbf{G}) \sum_{\mathbf{k}'} \mathrm{Tr}\left(P(\mathbf{k}')\Lambda(\mathbf{k}', \mathbf{G})^{\dagger}\right),$$

$$h_{\mathrm{F}}[P](\mathbf{k}) = -\sum_{\mathbf{q}} \frac{V_{\mathbf{q}}}{A} \Lambda(\mathbf{k}, \mathbf{q}) P(\mathbf{k} + \mathbf{q}) \Lambda(\mathbf{k}, \mathbf{q})^{\dagger}$$

$$E_{\mathrm{HF}}[P] = \sum_{\mathbf{k}} \mathrm{Tr}\left[P\left(h(\mathbf{k}) + \frac{1}{2} h_{\mathrm{HF}}[P](\mathbf{k})\right)\right],$$

$$C_{2z} = \sigma_x, \mathcal{T} = \mathrm{i}_y \mathcal{K}, C = \sigma_z,$$

$$\Lambda(\mathbf{k}, \mathbf{q}) = \Lambda_{\mathrm{S}}(\mathbf{k}, \mathbf{q}) + \Lambda_{\mathrm{A}}(\mathbf{k}, \mathbf{q})$$

$$\Lambda_{\mathrm{S/A}}(\mathbf{k}, \mathbf{q}) = \frac{1}{2}(\Lambda(\mathbf{k}, \mathbf{q}) \pm \sigma_z \Lambda(\mathbf{k}, \mathbf{q}) \sigma_z)$$

$$\Lambda_{\mathrm{S}}(\mathbf{k}, \mathbf{q}) = F_{\mathrm{S}}(\mathbf{k}, \mathbf{q}) \mathrm{e}^{\mathrm{i}\Phi_{\mathrm{S}}(\mathbf{k},\mathbf{q})\sigma_z}$$
$$\Lambda_{\mathrm{A}}(\mathbf{k}, \mathbf{q}) = F_{\mathrm{A}}(\mathbf{k}, \mathbf{q}) \sigma_x \mathrm{e}^{\mathrm{i}\Phi_{\mathrm{A}}(\mathbf{k},\mathbf{q})\sigma_z}$$

$$\mathcal{H} = \sum_{\mathbf{k}} c_{\mathbf{k}}^{\dagger} \tilde{h}(\mathbf{k}) c_{\mathbf{k}} + \frac{1}{2A} \sum_{\mathbf{q}} V_{\mathbf{q}} \delta\rho_{\mathbf{q}} \delta\rho_{-\mathbf{q}} + \text{ const. },$$

$$\delta\rho_{\mathbf{q}} = \rho_{\mathbf{q}} - \bar{\rho}_{\mathbf{q}}$$

$$\bar{\rho}_{\mathbf{q}} = \frac{1}{2} \sum_{\mathbf{G},\mathbf{k}} \delta_{\mathbf{G},\mathbf{q}} \mathrm{Tr}\Lambda(\mathbf{k}, \mathbf{G})$$

$$\mathcal{H}_{\mathrm{S}} = \frac{1}{2A} \sum_{\mathbf{q}} V_{\mathbf{q}} \delta\rho_{\mathbf{q}}^{\mathrm{S}} \delta\rho_{-\mathbf{q}}^{\mathrm{S}},$$

$$\mathcal{H}_{\mathrm{A}} = \frac{1}{2A}\sum_{\mathbf{q}} V_{\mathbf{q}}\left(\delta\rho_{\mathbf{q}}\delta\rho_{-\mathbf{q}} - \delta\rho^{\mathrm{S}}_{\mathbf{q}}\delta\rho^{\mathrm{S}}_{-\mathbf{q}}\right),$$

$$P = \frac{1}{2}(\mathbb{1}_4 + Q)$$

$$E_{\mathrm{HF,\,S}}\left[P_{\mathrm{FM/AFM}}\right] = 0$$

$$E_{\mathrm{HF,\,S}}[P_{\mathrm{CDW}}] = \frac{2}{A}\sum_{\mathbf{G}} V_{\mathbf{G}}\left[\sum_{\mathbf{k}} F_{\mathrm{S}}(\mathbf{k},\mathbf{G})\sin\left(\Phi_{\mathrm{S}}(\mathbf{k},\mathbf{G})\right)\right]^2$$

$$E_{\mathrm{HF,\,A}}[P_{\mathrm{FM}}] = 0$$

$$E_{\mathrm{HF,\,A}}[P_{\mathrm{AFM}}] = \frac{1}{A}\sum_{\mathbf{q},\mathbf{k}} V_{\mathbf{q}}[F_{\mathrm{A}}(\mathbf{k},\mathbf{q})]^2$$

$$n(\mathbf{R}) = \sum_{\ell,s}\left\langle f^{\dagger}_{\mathbf{R},\ell,s} f_{\mathbf{R},\ell,s}\right\rangle$$

$$\langle\hat{s}_z\rangle(\mathbf{R}) = \frac{\hbar}{2}\sum_{\ell,s,s'}\left\langle f^{\dagger}_{\mathbf{R},\ell,s}(s_z)_{ss'} f_{\mathbf{R},\ell,s'}\right\rangle$$

$$m_{\mathrm{FM/AFM}} = \sum_{\ell}\left|\left\langle\boldsymbol{\mu}_{\mathbf{R}_{\mathrm{A}},\ell}\right\rangle \pm \left\langle\boldsymbol{\mu}_{\mathbf{R}_{\mathrm{B}},\ell}\right\rangle\right|,$$

$$\left\langle\boldsymbol{\mu}_{\mathbf{R},\ell}\right\rangle = \mathrm{Tr}\left[-\mu_{\mathrm{B}}\mathbf{S}\begin{pmatrix}\left\langle f^{\dagger}_{\mathbf{R},\ell,\uparrow} f_{\mathbf{R},\ell,\uparrow}\right\rangle & \left\langle f^{\dagger}_{\mathbf{R},\ell,\downarrow} f_{\mathbf{R},\ell,\uparrow}\right\rangle \\ \left\langle f^{\dagger}_{\mathbf{R},\ell,\uparrow} f_{\mathbf{R},\ell,\downarrow}\right\rangle & \left\langle f^{\dagger}_{\mathbf{R},\ell,\downarrow} f_{\mathbf{R},\ell,\downarrow}\right\rangle\end{pmatrix}\right]$$

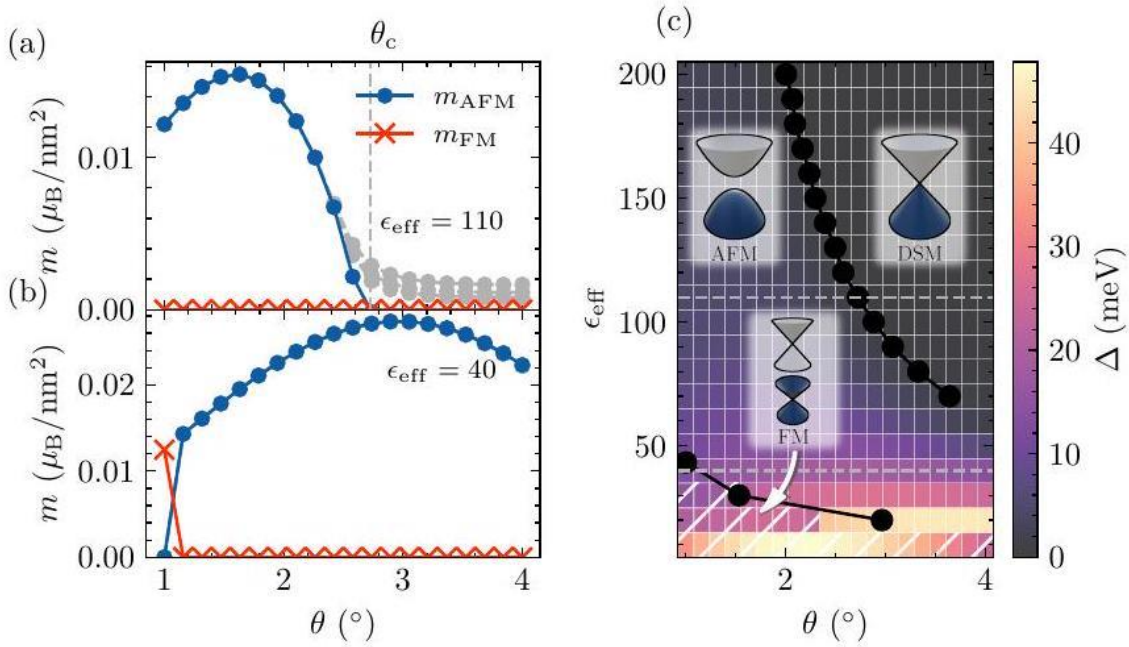

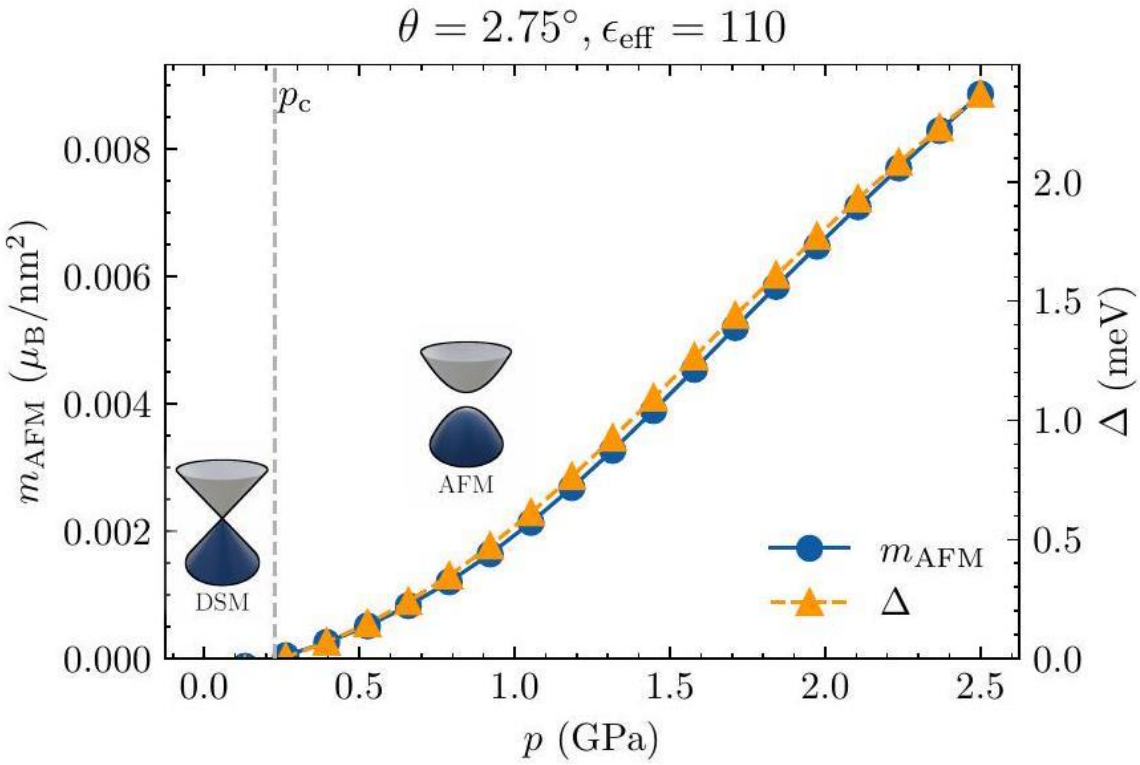

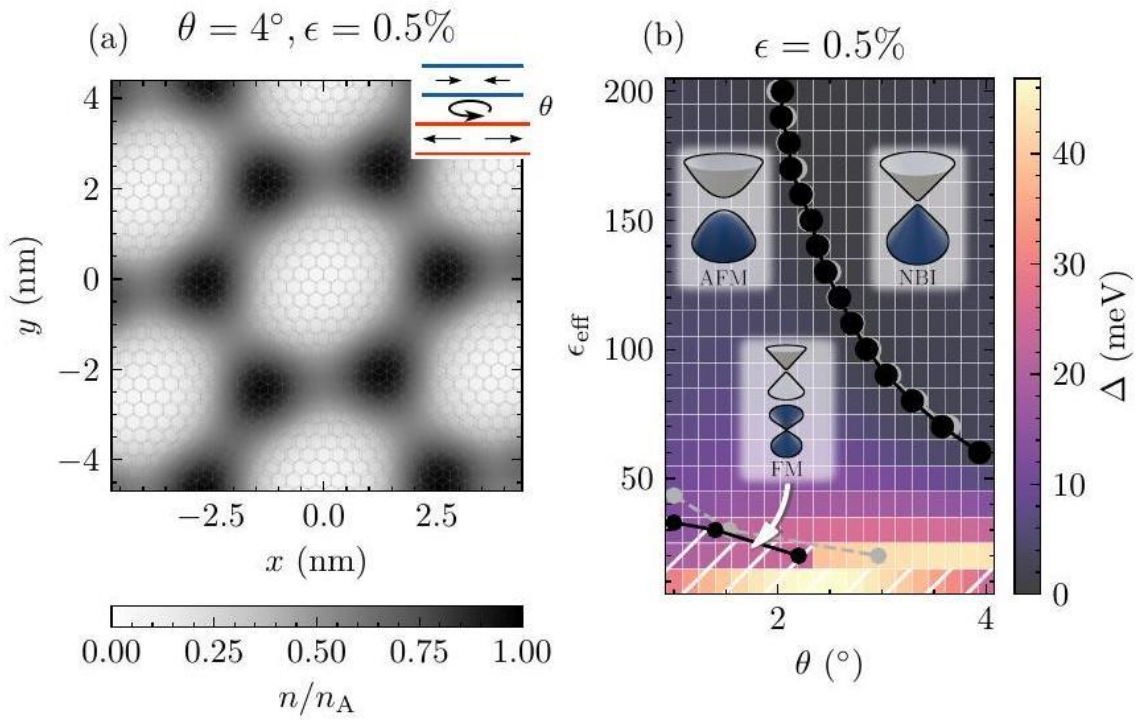

$$S_{\text{GNH}} = \int \mathrm{d}\tau\, \mathrm{d}^2\vec{x}\Big[\bar{\psi}(\gamma_\mu \otimes \mathbb{1}_2)\partial_\mu\psi + g\vec{\varphi}\cdot\bar{\psi}(\mathbb{1}_4 \otimes \vec{s})\psi + \frac{1}{2}\left(\partial_\mu\vec{\varphi}\right)^2 + \frac{r}{2}\vec{\varphi}^2 + \lambda(\vec{\varphi}^2)^2\Big]$$

$$(\partial_\mu) = (\partial_\tau, \partial_x, \partial_y)$$

$$\mathrm{g}\left\{\gamma_\mu, \gamma_\nu\right\} = 2\delta_{\mu\nu}$$

$$\vec{s} = \left(s_x, s_y, s_z\right)$$

$$\langle\vec{\varphi}\rangle \propto (\theta_\mathrm{c} - \theta)^\beta \text{ or } \langle\vec{\varphi}\rangle \propto (p - p_\mathrm{c})^\beta$$

$$\Delta \propto (\theta_\mathrm{c} - \theta)^{\nu z} \text{ or } \Delta \propto (p - p_\mathrm{c})^{\nu z}$$

$$\mathcal{S}(\mathbf{k}, \omega) \propto 1/(\omega^2 - \mathbf{k}^2)^{(2-\eta_\varphi)/2}$$

$$S_\mathrm{H} = \int \mathrm{d}\tau\, \mathrm{d}^2\vec{x} \left[\frac{1}{2}\left(\partial_\mu\vec{\varphi}\right)^2 + \frac{r}{2}\vec{\varphi}^2 + \lambda(\vec{\varphi}^2)^2\right]$$

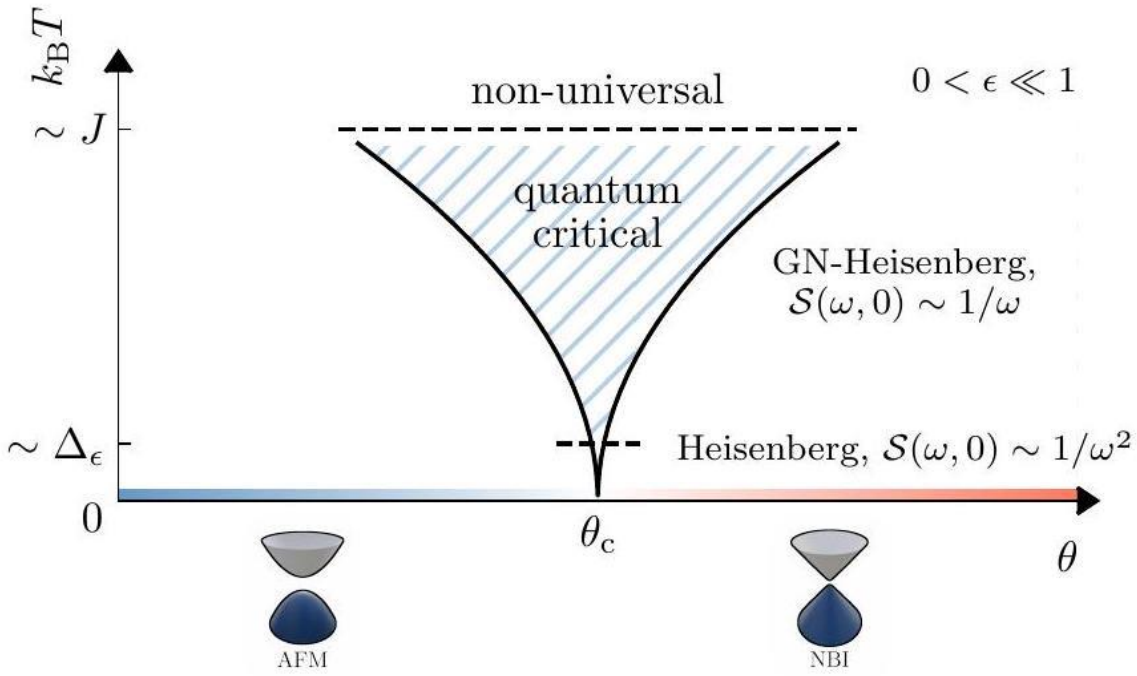

$$\mathcal{H}_\mathrm{kin} = \sum_{\mathbf{q}} f_{\mathbf{q}}^\dagger (h_\Gamma(\mathbf{q}) + h_0) f_{\mathbf{q}} + \sum_{\mathbf{q}} \sum_{j=1}^{6} f_{\mathbf{q}+\mathbf{G}_j}^\dagger h_1(\mathbf{G}_j) f_{\mathbf{q}},$$

$$h_0 = \begin{pmatrix} V_1 & V_{12} & 0 & 0 \\ V_{12} & V_2^{(0)} & V_{23}^{(0)} & 0 \\ 0 & V_{23}^{(0)} & V_2^{(0)} & V_{12} \\ 0 & 0 & V_{12} & V_1 \end{pmatrix},$$

$$h_1(\mathbf{G}) = \begin{pmatrix} 0 & 0 & 0 & 0 \\ 0 & V_2^{(1)} \mathrm{e}^{\mathrm{i}\varphi \mathrm{sgn}(\mathbf{G})} & V_{23}^{(1)} & 0 \\ 0 & V_{23}^{(1)} & V_2^{(1)} \mathrm{e}^{-\mathrm{i}\varphi \mathrm{sgn}(\mathbf{G})} & 0 \\ 0 & 0 & 0 & 0 \end{pmatrix}$$

$$\left|\psi_{\mathbf{k},n}(\mathbf{r})\right\rangle = \sum_{\substack{\mathbf{G} \\ |\mathbf{G}|\leq 4|\mathbf{G}_{1,2}|}} \sum_{\ell} u_{\mathbf{k},n;\mathbf{G},\ell} \mathrm{e}^{\mathrm{i}(\mathbf{k}+\mathbf{G})\cdot\mathbf{r}} |\ell\rangle$$

$$c^{\dagger}_{\mathbf{k},n,s} = \sum_{\mathbf{G},\ell} u_{\mathbf{k},n;\mathbf{G},\ell} f^{\dagger}_{\mathbf{k}+\mathbf{G},\ell,s}$$

$$f^{\dagger}_{\mathbf{R},\ell,s} = \frac{1}{\sqrt{A}} \sum_{\mathbf{q}} \mathrm{e}^{\mathrm{i}\mathbf{q}\cdot\mathbf{R}} f^{\dagger}_{\mathbf{q},\ell,s},$$

$$\left\langle f^{\dagger}_{\mathbf{R},\ell,s} f_{\mathbf{R},\ell',s'}\right\rangle = \frac{1}{A} \sum_{\mathbf{k},\mathbf{G},\mathbf{G}'} \sum_{n,n'} \mathrm{e}^{\mathrm{i}(\mathbf{G}-\mathbf{G}')\cdot\mathbf{R}} u^{*}_{\mathbf{k},n;\mathbf{G},\ell} u_{\mathbf{k},n';\mathbf{G}',\ell'} \times \left\langle c^{\dagger}_{\mathbf{k},n,s} c_{\mathbf{k},n',s'}\right\rangle$$

$$h_0(\mathbf{k}) \to h(\mathbf{k}) = h_0(\mathbf{k}) - h_{\mathrm{HF}}[P_{\mathrm{ref}}](\mathbf{k})$$

$$\Lambda(\mathbf{k},\mathbf{q}) = \Lambda_{\mathrm{S}}(\mathbf{k},\mathbf{q}) + \Lambda_{\mathrm{A}}(\mathbf{k},\mathbf{q})$$

$$\Lambda_{\mathrm{S}}(\mathbf{k},\mathbf{q}) = (a_0(\mathbf{k},\mathbf{q})\sigma_0 + a_x(\mathbf{k},\mathbf{q})\mathrm{i}\sigma_z)s_0$$

$$\Lambda_{\mathrm{S}}(\mathbf{k},\mathbf{q}) = F_{\mathrm{S}}(\mathbf{k},\mathbf{q})\mathrm{e}^{\mathrm{i}\Phi_{\mathrm{S}}(\mathbf{k},\mathbf{q})\sigma_z}$$

$$\Lambda_{\mathrm{A}}(\mathbf{k},\mathbf{q}) = F_{\mathrm{A}}(\mathbf{k},\mathbf{q})\sigma_x \mathrm{e}^{\mathrm{i}\Phi_{\mathrm{A}}(\mathbf{k},\mathbf{q})\sigma_z}$$

$$F_{\mathrm{S/A}}(-\mathbf{k},-\mathbf{q}) = F_{\mathrm{S/A}}(\mathbf{k},\mathbf{q})$$

$$\Phi_{\mathrm{S/A}}(-\mathbf{k},-\mathbf{q}) = -\Phi_{\mathrm{S/A}}(\mathbf{k},\mathbf{q})$$

$$\Lambda(\mathbf{k},\mathbf{q})^{\dagger} = \Lambda(\mathbf{k}+\mathbf{q},-\mathbf{q})$$

$$\Lambda(\mathbf{k},\mathbf{G})^{\dagger} = \Lambda(\mathbf{k},-\mathbf{G})$$

$$h(\mathbf{k}) = h_0(\mathbf{k}) - h_{\mathrm{HF}}[P_{\mathrm{ref}}](\mathbf{k})$$

$$\begin{aligned} h(\mathbf{k}) &= h_0(\mathbf{k}) - h_{\mathrm{HF}}\left[\frac{1}{2}Q_{\mathrm{ref}}\right](\mathbf{k}) - h_{\mathrm{HF}}\left[\frac{1}{2}\mathbb{1}_4\right](\mathbf{k}) \\ &= \tilde{h}(\mathbf{k}) - h_{\mathrm{HF}}\left[\frac{1}{2}\mathbb{1}_4\right](\mathbf{k}) \end{aligned}$$

$$\mathcal{H} = \sum_{\mathbf{k}} c^{\dagger}_{\mathbf{k}} \tilde{h}(\mathbf{k}) c_{\mathbf{k}} - \frac{1}{2A} \sum_{\mathbf{q}} V_{\mathbf{q}} : \rho_{\mathbf{q}} \rho_{-\mathbf{q}} : - h_{\mathrm{HF}}\left[\frac{1}{2}\mathbb{1}\right](\mathbf{k})$$

$$-\frac{1}{2A} \sum_{\mathbf{q}} V_{\mathbf{q}} : \rho_{\mathbf{q}} \rho_{-\mathbf{q}} : = \frac{1}{2A} \sum_{\mathbf{q}} V_{\mathbf{q}} \rho_{\mathbf{q}} \rho_{-\mathbf{q}} + h_{\mathrm{F}}\left[\frac{1}{2}\mathbb{1}\right](\mathbf{k}),$$

$$h_{\mathrm{H}}\left[\frac{1}{2}\mathbb{1}\right](\mathbf{k}) = \frac{1}{2A} \sum_{\mathbf{q}} V_{\mathbf{q}} \left(\bar{\rho}_{\mathbf{q}} \rho_{-\mathbf{q}} + \bar{\rho}_{-\mathbf{q}} \rho_{\mathbf{q}}\right)$$

$$\text{const.} = -\frac{1}{2A}\sum_{\mathbf{q}} V_{\mathbf{q}}\bar{\rho}_{\mathbf{q}}\bar{\rho}_{-\mathbf{q}}$$

$$\delta\rho^{\mathrm{S}}_{-\mathbf{q}} = \left(\delta\rho^{\mathrm{S}}_{\mathbf{q}}\right)^{\dagger}$$

$$E_{\mathrm{HF,\,S}}[P] = \langle\mathcal{H}_{\mathrm{S}}\rangle$$
$$= \frac{1}{2A}\sum_{\mathbf{q}} V_{\mathbf{q}}\left(\langle\rho^{\mathrm{S}}_{\mathbf{q}}\rho^{\mathrm{S}}_{-\mathbf{q}}\rangle - \bar{\rho}^{\mathrm{S}}_{\mathbf{q}}\langle\rho^{\mathrm{S}}_{-\mathbf{q}}\rangle - \bar{\rho}^{\mathrm{S}}_{-\mathbf{q}}\langle\rho^{\mathrm{S}}_{\mathbf{q}}\rangle\right.$$
$$\left.+\bar{\rho}^{\mathrm{S}}_{\mathbf{q}}\bar{\rho}^{\mathrm{S}}_{-\mathbf{q}}\right)$$

$$E_{\mathrm{HF,\,S}}[P] = \frac{1}{2}\sum_{\mathbf{k}} \mathrm{Tr}\left\{Ph^{\mathrm{S}}_{\mathrm{HF}}[P-\mathbb{1}_4](\mathbf{k})\right\} + \Delta E_{\mathrm{S}},$$

$$h^{\mathrm{S}}_{\mathrm{HF}}[P](\mathbf{k}) = h^{\mathrm{S}}_{\mathrm{H}}[P](\mathbf{k}) + h^{\mathrm{S}}_{\mathrm{F}}[P](\mathbf{k})$$

$$\Delta E_{\mathrm{S}} = \frac{1}{2A}\sum_{\mathbf{q}} V_{\mathbf{q}}\bar{\rho}^{\mathrm{S}}_{\mathbf{q}}\bar{\rho}^{\mathrm{S}}_{-\mathbf{q}}$$
$$= \frac{2}{A}\sum_{\mathbf{G}} V_{\mathbf{G}}\left(\sum_{\mathbf{k}} F_{\mathrm{S}}(\mathbf{k},\mathbf{G})\cos\,\Phi_{\mathrm{S}}(\mathbf{k},\mathbf{G})\right)^2.$$

$$E_{\mathrm{F,\,S}}[P] = \frac{1}{2}\sum_{\mathbf{k}} \mathrm{Tr}\left\{Ph^{\mathrm{S}}_{\mathrm{F}}[P-\mathbb{1}_4]\right\}$$

$$h^{\mathrm{S}}_{\mathrm{F}}[P-\mathbb{1}_4](\mathbf{k}) \propto P-\mathbb{1}_4$$

$$E_{\mathrm{H,\,S}}[P] = \frac{1}{2}\sum_{\mathbf{k}} \mathrm{Tr}\left\{Ph^{\mathrm{S}}_{\mathrm{H}}[P-\mathbb{1}_4]\right\}$$
$$= \frac{1}{2A}\sum_{\mathbf{G},\mathbf{k},\mathbf{k}'} V_{\mathbf{G}}\mathrm{Tr}\{P\Lambda_{\mathrm{S}}(\mathbf{k},\mathbf{G})\}$$
$$\times\,\mathrm{Tr}\left\{(P-\mathbb{1}_4)\Lambda^{\dagger}_{\mathrm{S}}(\mathbf{k}',\mathbf{G})\right\}$$

$$E_{\mathrm{H,\,S}}\left[P_{\mathrm{FM,AFM}}\right] = -\Delta E_{\mathrm{S}}$$

$$E_{\mathrm{H}}[P_{\mathrm{CDW}}] = -\frac{2}{A}\sum_{\mathbf{G}} V_{\mathbf{G}}\left(\sum_{\mathbf{k}} F_{\mathrm{S}}(\mathbf{k},\mathbf{G})\mathrm{e}^{\mathrm{i}\Phi_{\mathrm{S}}(\mathbf{k},\mathbf{G})}\right)^2,$$

$$E_{\mathrm{HF}}[P_{\mathrm{CDW}}] = \frac{2}{A}\sum_{\mathbf{G}} V_{\mathbf{G}}\left(\sum_{\mathbf{k}} F_{\mathrm{S}}(\mathbf{k},\mathbf{G})\sin\,\Phi_{\mathrm{S}}(\mathbf{k},\mathbf{G})\right)^2,$$

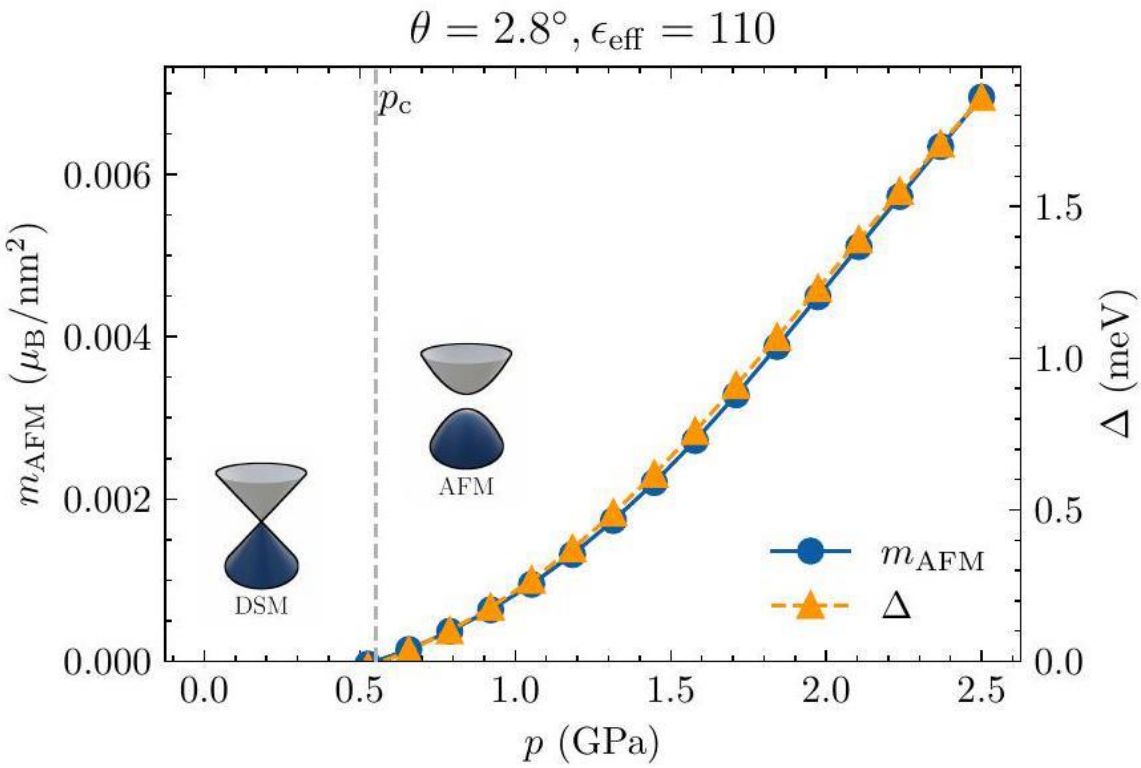

$$\hat{H}_{\text{el}}(\boldsymbol{R})\left|\phi_j(\boldsymbol{r};\boldsymbol{R})\right\rangle = E_j(\boldsymbol{R})\left|\phi_j(\boldsymbol{r};\boldsymbol{R})\right\rangle.$$

$$\Psi(\boldsymbol{R},\boldsymbol{r}) = \sum_j \chi_j(\boldsymbol{R})\phi_j(\boldsymbol{r};\boldsymbol{R}),$$

$$E_n = -\frac{m_e e^4}{8\epsilon_0^2 h^2}\frac{1}{n^2}$$

$$\mu = (M^{-1} + m_e^{-1})^{-1}$$

$$H_{\text{s-ph}} \propto \boldsymbol{\omega}_{\text{n}} \cdot \boldsymbol{J}_{\text{e}}$$

$$\dot{\boldsymbol{R}} = \frac{\boldsymbol{P}}{M},$$
$$\dot{\boldsymbol{P}} = -\nabla_{\boldsymbol{R}} E_j,$$

$$\dot{c}_J = -\frac{i}{\hbar}E_j c_j - \sum_k \dot{\boldsymbol{R}} \cdot \boldsymbol{d}_{jk} c_k$$

$$\boldsymbol{d}_{jk} = \langle \phi_j | \nabla_{\boldsymbol{R}} | \phi_k \rangle$$

$$g_{j\to k} = \max\left[2\Delta t \text{Re}\left(\boldsymbol{R} \cdot \boldsymbol{d}_{jk}\frac{\rho_{kj}}{\rho_{jj}}\right), 0\right]$$

$$\sum_I d_{jk}^{I\alpha} \neq 0$$

$$\sum_{I\beta\gamma} \epsilon_{\alpha\beta\gamma} R^{I\beta} d_{jk}^{I\gamma} \neq 0$$

$$\boldsymbol{d}_{jk} \to \boldsymbol{d}_{jk} - \boldsymbol{d}_{jk,\mathrm{ETF}} - \boldsymbol{d}_{jk,\mathrm{ERF}}$$

$$|\Psi(t)\rangle = \sum_j c_j^0(t) \left|\psi_j^0(t)\right\rangle$$

$$\hat{H}(t) \left|\psi_j^0(t)\right\rangle = E_j^0(t) \left|\psi_j^0(t)\right\rangle$$

$$\dot{c}_j^0 = -\frac{i}{\hbar} E_j^0 c_j^0 - \sum_k T_{jk} c_k^0$$

$$T_{jk} = \left\langle \psi_j^0 \right| \frac{d}{dt} \left| \psi_k^0 \right\rangle$$

$$H_{jk}^1(t) = E_k^0 \delta_{jk} - T_{jk}$$

$$\hat{H}^1(t) \left|\psi_j^1(t)\right\rangle = E_j^1(t) \left|\psi_j^1(t)\right\rangle$$

$$H_{\mathrm{PS},jk}(\boldsymbol{R},\boldsymbol{P}) = E_j + \sum_l \frac{\left(\boldsymbol{P}\delta_{jl} - i\hbar \boldsymbol{d}_{jl}\right)\left(\boldsymbol{P}\delta_{lk} - i\hbar \boldsymbol{d}_{lk}\right)}{2M}$$

$$\hat{H}_{\mathrm{PS}} \left|\psi_j^{PS}(\boldsymbol{R},\boldsymbol{P})\right\rangle = E_j^{\mathrm{PS}}(\boldsymbol{R},\boldsymbol{P}) \left|\psi_j^{\mathrm{PS}}(\boldsymbol{R},\boldsymbol{P})\right\rangle$$

$$\begin{aligned} \dot{\boldsymbol{R}} &= \nabla_{\boldsymbol{P}} E_j^{\mathrm{PS}} \\ \dot{\boldsymbol{P}} &= -\nabla_{\boldsymbol{R}} E_j^{\mathrm{PS}} \end{aligned}$$

$$\dot{c}_J = \sum_k -\frac{i}{\hbar} \left\langle \psi_j^{\mathrm{PS}} \right| \left(\hat{H}_{\mathrm{el}} - i\hbar \frac{d}{dt} \right) \left| \psi_k^{\mathrm{PS}} \right\rangle c_k$$

$$H_{\mathrm{el},\mu\nu} = \langle \mu | \hat{H}_{\mathrm{el}} | \nu \rangle$$

$$H_{\mathrm{PS},\mu\nu} = H_{\mathrm{el},\mu\nu} + \sum_\sigma \frac{\left(\boldsymbol{P}\delta_{\mu\sigma} - i\hbar \boldsymbol{\Gamma}_{\mu\sigma}\right)\left(\boldsymbol{P}\delta_{\sigma\nu} - i\hbar \boldsymbol{\Gamma}_{\sigma\nu}\right)}{2M}.$$

$$\boldsymbol{\Gamma}_{\mu\nu} = \langle \mu | \hat{\boldsymbol{\Gamma}} | \nu \rangle$$

$$\sum_\nu H_{\mathrm{PS},\mu\nu} \phi_{j\nu} = \sum_\nu E_j^{\mathrm{PS}} S_{\mu\nu} \phi_{j\nu}$$

$$\boldsymbol{\Gamma}_{\mu\nu} \stackrel{?}{=} \boldsymbol{d}_{\mu\nu} = \langle \mu | \nabla_{\boldsymbol{R}} | \nu \rangle.$$

$$\boldsymbol{\Gamma}'_{\mu\nu} = \frac{\boldsymbol{d}_{\mu\nu} - \boldsymbol{d}_{\nu\mu}^*}{2}.$$

$$\sum_I -i\hbar \Gamma_{\mu\nu}'^{I\alpha} + \langle \mu | \hat{p}_{\mathrm{e}}^\alpha | \nu \rangle = 0$$

$$\left(\hat{\boldsymbol{P}}_{\mathrm{n}}+\hat{\boldsymbol{p}}_{\mathrm{e}}\right)|\mu\rangle=0$$

$$\left(\hat{\boldsymbol{J}}_{\mathrm{n}}+\hat{\boldsymbol{J}}_{\mathrm{e}}\right)|\mu\rangle=0$$

$$\boldsymbol{\Gamma}_{\mu\nu}=\boldsymbol{\Gamma}'_{\mu\nu}+\boldsymbol{\Gamma}''_{\mu\nu},$$

$$\sum_{I\beta\gamma}-i\hbar\epsilon_{\alpha\beta\gamma}R^{I\beta}\Gamma_{\mu\nu}^{I\gamma}+\langle\mu|\hat{j}_{\mathrm{e}}^{\alpha}|\nu\rangle=0.$$

$$\sum_{I}-i\hbar\Gamma_{\mu\nu}^{I\alpha}+\langle\mu|\hat{p}_{\mathrm{e}}^{\alpha}|\nu\rangle=0$$

$$\hat{H}_{\mathrm{PS}}=H_{\mathrm{el}}+\frac{(\boldsymbol{P}-i\hbar\hat{\boldsymbol{\Gamma}})^2}{2M}.$$

$$\sum_{I}-i\hbar\hat{\Gamma}^{I\alpha}+\hat{p}_{\mathrm{e}}^{\alpha}=0$$

$$\sum_{I\beta\gamma}-i\hbar\epsilon_{\alpha\beta\gamma}R^{I\beta}\hat{\Gamma}^{I\gamma}+\hat{j}_{\mathrm{e}}^{\alpha}=0$$

$$\boldsymbol{\Gamma}_{\mu\nu}(\boldsymbol{R}_0)=\boldsymbol{\Gamma}_{\mu\nu}(\boldsymbol{R}_0+\Delta\boldsymbol{R})$$

$$\boldsymbol{\Gamma}_{\mathcal{R}\mu\mathcal{R}\nu}(\mathcal{R}\boldsymbol{R}_0)=\mathcal{R}\boldsymbol{\Gamma}_{\mu\nu}(\boldsymbol{R}_0).$$

$$\hat{\boldsymbol{\Gamma}}(\boldsymbol{R},\hat{\boldsymbol{r}},\hat{\boldsymbol{p}},\hat{\boldsymbol{s}})=\hat{\boldsymbol{\Gamma}}(\boldsymbol{R}+\Delta\boldsymbol{R},\hat{\boldsymbol{r}}+\Delta\boldsymbol{R},\hat{\boldsymbol{p}},\hat{\boldsymbol{s}})$$

$$\hat{\boldsymbol{\Gamma}}(\mathcal{R}\boldsymbol{R},\mathcal{R}\hat{\boldsymbol{r}},\mathcal{R}\hat{\boldsymbol{p}},\mathcal{R}\hat{\boldsymbol{s}})=\mathcal{R}\hat{\boldsymbol{\Gamma}}(\boldsymbol{R},\hat{\boldsymbol{r}},\hat{\boldsymbol{p}},\hat{\boldsymbol{s}})$$

$$\hat{H}_{\mathrm{PS}}\left|\psi_j\right\rangle=E_j\left|\psi_j\right\rangle.$$

$$\begin{aligned}\frac{\partial c_j}{\partial t}&=\sum_k-\frac{i}{\hbar}\langle\psi_j|\left(\hat{H}_{\mathrm{el}}-i\hbar\frac{d}{dt}\right)|\psi_k\rangle c_k\\&=-\frac{i}{\hbar}E_jc_j-\sum_k\frac{i}{\hbar}\langle\psi_j|\left(\hat{H}_{\mathrm{el}}-\hat{H}_{\mathrm{PS}}\right)|\psi_k\rangle c_k\\&-\sum_k\left(\dot{\boldsymbol{R}}\cdot\langle\psi_j|\nabla_{\boldsymbol{R}}|\psi_k\rangle+\dot{\boldsymbol{P}}\cdot\langle\psi_j|\nabla_{\boldsymbol{P}}|\psi_k\rangle\right)c_k\\&-\sum_k\frac{i}{\hbar}\langle\psi_j|\left(\hat{H}_{\mathrm{el}}-\hat{H}_{\mathrm{PS}}\right)|\psi_k\rangle c_k\\&=\sum_{k,l}\left(\frac{\boldsymbol{P}}{M}\cdot\boldsymbol{\Gamma}_{jk}-i\hbar\frac{\boldsymbol{\Gamma}_{jl}\cdot\boldsymbol{\Gamma}_{lk}}{2M}\right)c_k.\end{aligned}$$

$$\boldsymbol{\Gamma}_{jk}=\left\langle\psi_j\middle|\hat{\boldsymbol{\Gamma}}\middle|\psi_k\right\rangle$$

$$\left\langle\psi_j\middle|\left(\hat{\boldsymbol{P}}_{\mathrm{n}}+\hat{\boldsymbol{p}}_{\mathrm{e}}\right)\middle|\psi_k\right\rangle=0$$

$$-\sum_{kI\alpha}\left(\dot{R}^{I\alpha}\langle\psi_j|\nabla_{R^{I\alpha}}|\psi_k\rangle+\dot{P}^{I\alpha}\langle\psi_j|\nabla_{P^{I\alpha}}|\psi_k\rangle\right)c_k$$
$$=\frac{i}{\hbar}\sum_{kI\alpha}\dot{R}^{I\alpha}\langle\psi_j|\hat{p}_{\mathrm{e}}^{\alpha}|\psi_k\rangle c_k.$$

$$\sum_{I\alpha}\frac{P^{I\alpha}}{M}\Gamma_{jk}^{I\alpha}=-\frac{i}{\hbar}\sum_{I\alpha}\dot{R}^{I\alpha}\langle\psi_j|\hat{\boldsymbol{p}}_{\mathrm{e}}|\psi_k\rangle$$

$$\frac{\boldsymbol{P}^I}{M}=\boldsymbol{\omega}\times\boldsymbol{R}^I$$

$$-i\hbar\langle\mu|\frac{\boldsymbol{P}}{M}\cdot\hat{\boldsymbol{\Gamma}}|\nu\rangle=-i\hbar\sum_I(\boldsymbol{\omega}\times\boldsymbol{R}^I)\cdot\langle\mu|\hat{\boldsymbol{\Gamma}}^I|\nu\rangle$$
$$=-i\hbar\sum_I\boldsymbol{\omega}\cdot\left(\boldsymbol{R}^I\times\langle\mu|\hat{\boldsymbol{\Gamma}}^I|\nu\rangle\right)$$
$$=-\boldsymbol{\omega}\cdot\langle\mu|\hat{\boldsymbol{J}}_{\mathrm{e}}|\nu\rangle$$

$$\dot{\boldsymbol{P}}^I=M(\boldsymbol{\omega}\times\dot{\boldsymbol{R}}^I)=\boldsymbol{\omega}\times\boldsymbol{P}^I.$$

$$\sum_I\left(\dot{\boldsymbol{R}}^I\cdot\langle\psi_j|\nabla_{\boldsymbol{R}^I}|\psi_k\rangle+\dot{\boldsymbol{P}}^I\cdot\langle\psi_j|\nabla_{\boldsymbol{P}^I}|\psi_k\rangle\right)$$
$$=\sum_I(\boldsymbol{\omega}\times\boldsymbol{R}^I)\cdot\langle\psi_j|\nabla_{\boldsymbol{R}^I}|\psi_k\rangle+(\boldsymbol{\omega}\times\boldsymbol{P}^I)\cdot\langle\psi_j|\nabla_{\boldsymbol{P}^I}|\psi_k\rangle$$
$$=\sum_I\boldsymbol{\omega}\cdot\left(\boldsymbol{R}^I\times\langle\psi_j|\nabla_{\boldsymbol{R}^I}|\psi_k\rangle)+\boldsymbol{P}^I\times\langle\psi_j|\nabla_{\boldsymbol{P}^I}|\psi_k\rangle\right)$$
$$=-\frac{i}{\hbar}\sum_I\boldsymbol{\omega}\cdot\langle\psi_j|\hat{\boldsymbol{J}}_{\mathrm{e}}|\psi_k\rangle.$$

$$\langle\psi_j|\left(\sum_I\boldsymbol{R}^I\times-i\hbar\nabla_{\boldsymbol{R}^I}+\boldsymbol{P}^I\times-i\hbar\nabla_{\boldsymbol{P}^I}+\hat{\boldsymbol{J}}_{\mathrm{e}}\right)|\psi_k\rangle=0$$

$$\sum_I\frac{\boldsymbol{P}^I}{M}\cdot\boldsymbol{\Gamma}_{jk}^I=-\frac{i}{\hbar}\sum_I\boldsymbol{\omega}\cdot\left(\boldsymbol{R}^I\times\boldsymbol{\Gamma}_{jk}^I\right)$$
$$=-\frac{i}{\hbar}\sum_I\boldsymbol{\omega}\cdot\langle\psi_j|\hat{\boldsymbol{J}}_{\mathrm{e}}|\psi_k\rangle$$

$$\hat{H}_{\mathrm{SO}}=\frac{\lambda\alpha_0^2}{2}\sum_I\frac{Z_I}{|\hat{\boldsymbol{r}}-\boldsymbol{R}^I|^3}\left((\hat{\boldsymbol{r}}-\boldsymbol{R}^I)\times\hat{\boldsymbol{p}}\right)\cdot\hat{\boldsymbol{s}}$$

$$S_{\mu\nu}(\boldsymbol{R})=\langle\mu(\boldsymbol{R})\mid\nu(\boldsymbol{R})\rangle.$$

$$|\mu(\boldsymbol{R}+d\boldsymbol{R})\rangle=|\mu(\boldsymbol{R})\rangle+\left|\frac{\partial\mu(\boldsymbol{R})}{\partial\boldsymbol{R}}\right\rangle\cdot\Delta\boldsymbol{R}$$

$$S_{\mu\nu}(\boldsymbol{R}+\Delta\boldsymbol{R})=S_{\mu\nu}(\boldsymbol{R})+\left(\boldsymbol{d}_{\mu\nu}+\boldsymbol{d}_{\nu\mu}^*\right)\cdot\Delta\boldsymbol{R}$$

$$S_{\mu\nu}(\boldsymbol{R}+\Delta\boldsymbol{R}) = S_{\mu\nu}(\boldsymbol{R}).$$

$$\sum_I \boldsymbol{d}^I_{\mu\nu} + \boldsymbol{d}^{I*}_{\nu\mu} = 0$$

$$\left(\boldsymbol{d}_{\mu\nu} + \boldsymbol{d}^*_{\nu\mu}\right)/2 \text{ and } \left(\boldsymbol{d}_{\mu\nu} - \boldsymbol{d}^*_{\nu\mu}\right)/2$$

$$\boldsymbol{\Gamma}''^A_{\mu\nu} = \zeta^I_{\mu\nu}\left(\boldsymbol{R}^I - \boldsymbol{R}^0_{\mu\nu}\right) \times \left(\boldsymbol{K}^{-1}_{\mu\nu}\boldsymbol{J}_{\mu\nu}\right),$$

$$\zeta^I_{\mu\nu} = \exp\left(-\eta\frac{2|(\boldsymbol{R}^I - \boldsymbol{R}^J)|^2|(\boldsymbol{R}^I - \boldsymbol{R}^K)|^2}{|(\boldsymbol{R}^I - \boldsymbol{R}^J)|^2 + |(\boldsymbol{R}^J - \boldsymbol{R}^K)|^2}\right),$$

$$\boldsymbol{R}^0_{\mu\nu} = \sum_I \zeta^I_{\mu\nu}\boldsymbol{R}^I / \sum_I \zeta^I_{\mu\nu},$$

$$\boldsymbol{K}_{\mu\nu} = -\sum_I \zeta^I_{\mu\nu}\left(\left(\boldsymbol{R}^I - \boldsymbol{R}^0_{\mu\nu}\right)^\top\left(\boldsymbol{R}^I - \boldsymbol{R}^0_{\mu\nu}\right)\right)\mathcal{I}$$
$$+\sum_I \zeta^I_{\mu\nu}\left(\boldsymbol{R}^I - \boldsymbol{R}^0_{\mu\nu}\right)\left(\boldsymbol{R}^I - \boldsymbol{R}^0_{\mu\nu}\right)^\top,$$

$$\boldsymbol{J}_{\mu\nu} = \frac{1}{i\hbar}\langle\mu|\frac{1}{2}\left(\hat{\boldsymbol{l}}^{(J)} + \hat{\boldsymbol{l}}^{(K)}\right) + \hat{\boldsymbol{s}}|\nu\rangle.$$

$$\hat{\boldsymbol{l}}^{(J)} = (\hat{\boldsymbol{r}} - \boldsymbol{R}^J) \times \hat{\boldsymbol{p}}$$

$$\hat{\boldsymbol{l}}^{(K)} = (\hat{\boldsymbol{r}} - \boldsymbol{R}^K) \times \hat{\boldsymbol{p}}$$

$$\hat{\boldsymbol{\Gamma}} = \hat{\boldsymbol{\Gamma}}' + \hat{\boldsymbol{\Gamma}}''$$

$$\hat{\boldsymbol{\Gamma}}'^I = \frac{1}{2i\hbar}\left(\Theta^I(\hat{\boldsymbol{r}})\hat{\boldsymbol{p}} + \hat{\boldsymbol{p}}\Theta^I(\hat{\boldsymbol{r}})\right)$$

$$\Theta^I(\hat{\boldsymbol{r}}) = \frac{M^I e^{-\left|\hat{\boldsymbol{r}}-\boldsymbol{R}^I\right|^2}/\sigma_I^2}{\sum_J M^J e^{-\left|\hat{\boldsymbol{r}}-\boldsymbol{R}^J\right|^2}/\sigma_J^2}$$

$$\hat{\boldsymbol{\Gamma}}''^I = \sum_{JK} \zeta^I_{JK}\left(\boldsymbol{R}^I - \boldsymbol{R}^0_{JK}\right) \times \left(\boldsymbol{K}^{-1}_{JK}\hat{\boldsymbol{J}}^J\delta_{JK}\right),$$

$$\zeta^I_{JK} = \exp\left(-\eta\frac{2|(\boldsymbol{R}^I - \boldsymbol{R}^J)|^2|(\boldsymbol{R}^I - \boldsymbol{R}^K)|^2}{|(\boldsymbol{R}^I - \boldsymbol{R}^J)|^2 + |(\boldsymbol{R}^J - \boldsymbol{R}^K)|^2}\right),$$

$$\boldsymbol{R}^0_{JK} = \sum_I \zeta^I_{JK}\boldsymbol{R}^I / \sum_I \zeta^I_{JK}$$

$$\boldsymbol{K}_{JK} = -\sum_I \zeta^I_{JK}\left(\left(\boldsymbol{R}^I - \boldsymbol{R}^0_{JK}\right)^\top\left(\boldsymbol{R}^I - \boldsymbol{R}^0_{JK}\right)\right)\mathcal{I}$$
$$+\sum_I \zeta^I_{JK}\left(\boldsymbol{R}^I - \boldsymbol{R}^0_{JK}\right)\left(\boldsymbol{R}^I - \boldsymbol{R}^0_{JK}\right)^\top$$

$$\hat{\boldsymbol{J}}^I = \frac{1}{2i\hbar}\left((\hat{\boldsymbol{r}} - \boldsymbol{R}^I) \times \Theta^I(\hat{\boldsymbol{r}})\hat{\boldsymbol{p}} + (\hat{\boldsymbol{r}} - \boldsymbol{R}^I) \times \hat{\boldsymbol{p}}\Theta^I(\hat{\boldsymbol{r}}) + 2\hat{\boldsymbol{s}}\right)$$

$$\hat{H}_{\mathrm{mol}} = -\sum_{i}^{N_{\mathrm{e}}} \frac{\nabla_i^2}{2} + \sum_{i}^{N_{\mathrm{e}}} v_{\mathrm{en}}(\mathbf{r}_i, \mathbf{Q}) + \sum_{i<j}^{N_{\mathrm{e}}} v_{\mathrm{ee}}(\mathbf{r}_i, \mathbf{r}_j) + \sum_{\nu}^{N_{\mathrm{mode}}} \frac{P_\nu^2}{2} + V_{\mathrm{nn}}(\mathbf{Q})$$

$$|\Psi(t)\rangle = \sum_{\mathbf{v}} \sum_{\mathbf{n}} C_{\mathbf{vn}}(t) |\mathbf{v}\rangle_{\mathbf{n}} \otimes |\mathbf{n}\rangle_{\mathrm{e}}$$

$$\hat{H}_{\mathrm{mol}} = \sum_{pq}^{N_{\mathrm{o}}} h_{pq}(\hat{\mathbf{Q}}) \hat{a}_p^\dagger \hat{a}_q + \frac{1}{2} \sum_{pqrs}^{N_{\mathrm{o}}} v_{pqrs}(\hat{\mathbf{Q}}) \hat{a}_p^\dagger \hat{a}_q^\dagger \hat{a}_s \hat{a}_r + \sum_{pq}^{N_{\mathrm{o}}} \sum_{\nu}^{N_{\mathrm{mode}}} \left(i d_{\nu,pq}(\hat{\mathbf{Q}}) \cdot \hat{P}_\nu - g_{\nu,pq}(\hat{\mathbf{Q}}) \right) \hat{a}_p^\dagger \hat{a}_q + \sum_{\nu}^{N_{\mathrm{mode}}} \frac{\hat{P}_\nu^2}{2} + V_{\mathrm{nn}}(\hat{\mathbf{Q}})$$

$$\hat{Q}_\nu = \sqrt{1/2\omega_\nu} \left(\hat{b}_\nu^\dagger + \hat{b}_\nu \right)$$

$$\hat{P}_\nu = i\sqrt{\omega_\nu/2} \left(\hat{b}_\nu^\dagger - \hat{b}_\nu \right)$$

$$\partial \mathbf{c} / \partial Q_\nu + \mathbf{d}_\nu \mathbf{c} = 0$$

$$\eta_m = \sum_{l} c_{lm} \psi_l$$

$$\hat{a}_p = \hat{Z}_1 \otimes \cdots \otimes \hat{Z}_{p-1} \otimes \left(\hat{X}_p + i\hat{Y}_p \right)$$

$$\hat{H}_{\mathrm{cMQB}} = \sum_{I} \hat{H}_I = \sum_{I} f_I(\{\hat{b}_\nu\}, \{\hat{b}_\nu^\dagger\}) \bigotimes_{k=1}^{N_{\mathrm{q}}} \hat{P}_k^I,$$

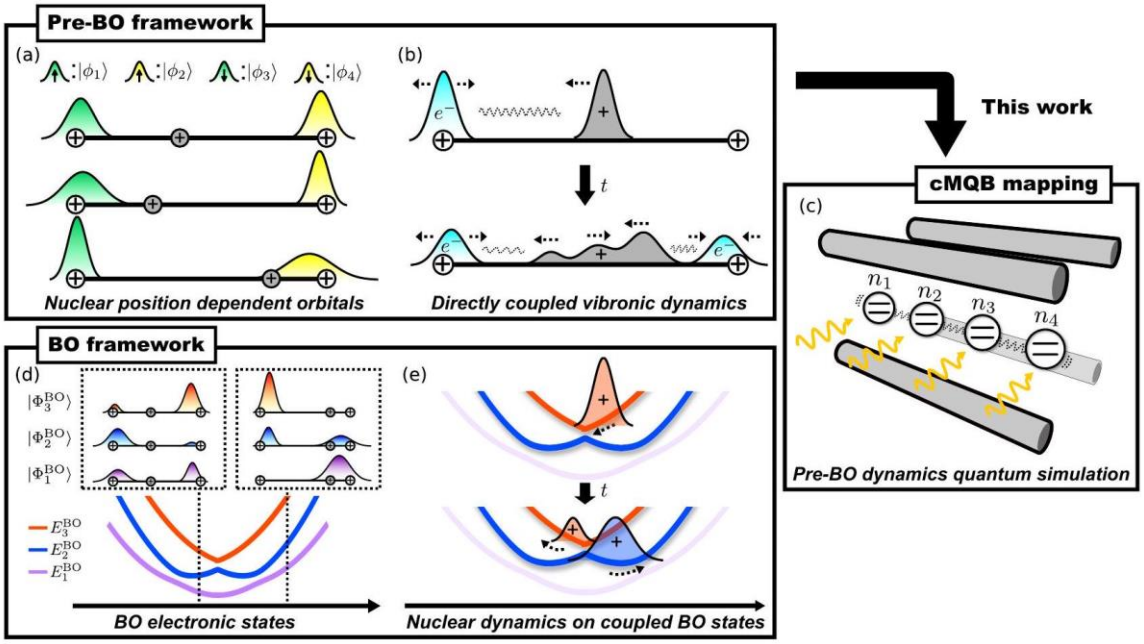

$$\hat{U}(t) \approx \left(\prod_{I}^{N_{\mathrm{op}}} \hat{U}_I(t/N_{\mathrm{t}}) \right)^{N_{\mathrm{t}}} \equiv \hat{U}_{\mathrm{cMQB}}\,(\Delta t)^{N_{\mathrm{t}}}$$

$$\begin{aligned}
\hat{U}_I(t) &= \exp\left(-it\hat{H}_I\right) \\
&= \exp\left(-itf_I(\{\hat{b}_\nu\},\{\hat{b}_\nu^\dagger\}) \bigotimes_{k=1}^{N_{\mathrm{q}}} \hat{P}_k^I \right) \\
&= \hat{\Lambda}^I \exp\left(-itf_I(\{\hat{b}_\nu\},\{\hat{b}_\nu^\dagger\}) \otimes \hat{X}_{q_0^I} \right) \hat{\Lambda}^{I\dagger}
\end{aligned}$$

$$\hat{U}_I(\Delta t) = \exp\left(-i\theta\Delta t\left(\hat{b}_1 + \hat{b}_1^\dagger\right)\hat{Y}_2\hat{Z}_3\hat{Y}_4\right)$$

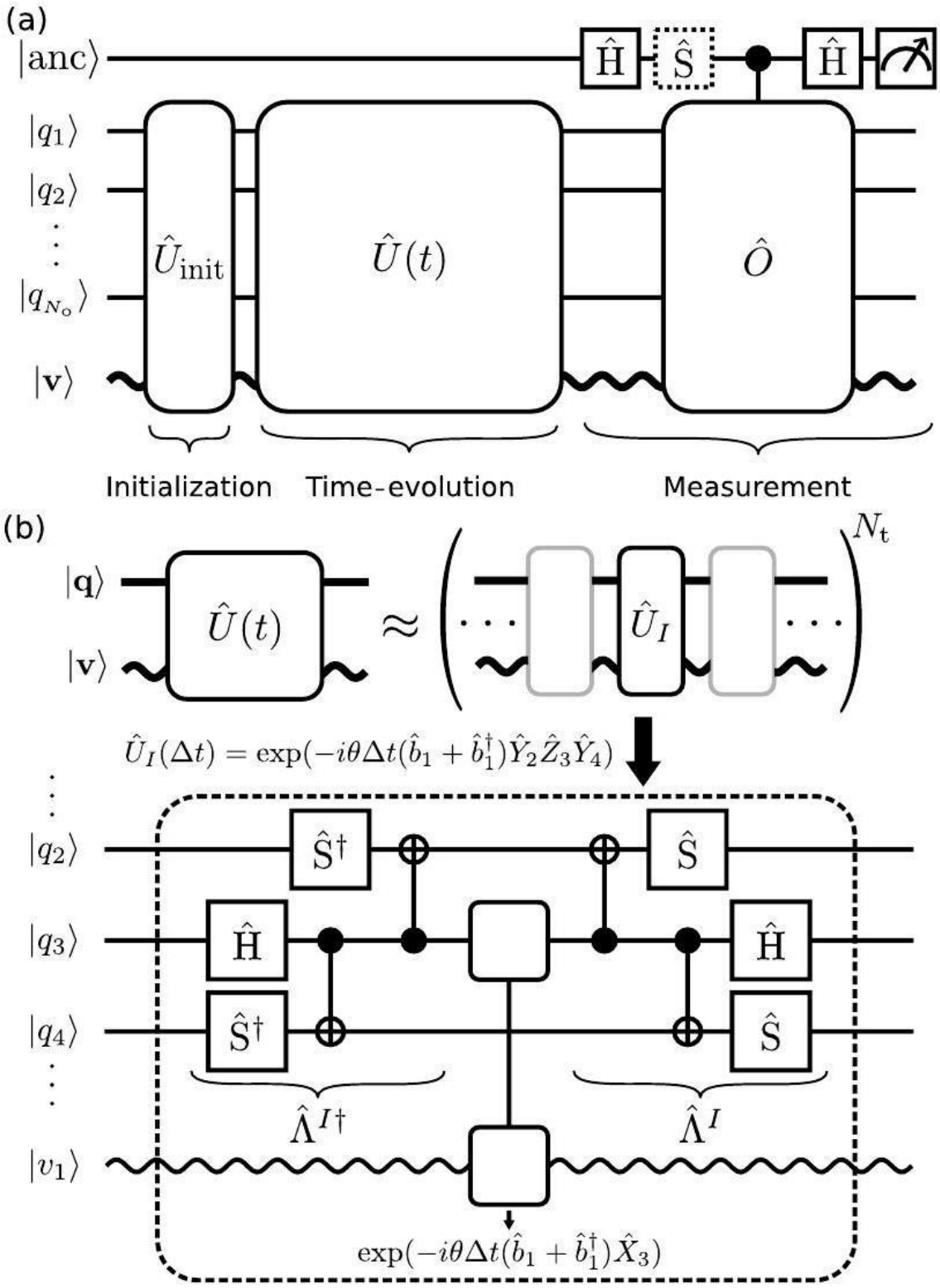

$$\hat{U}_I(\Delta t) = \exp\left(-i\theta\Delta t\left(\hat{b}_1 + \hat{b}_1^\dagger\right)\hat{Y}_2\hat{Z}_3\hat{Y}_4\right)$$

$$\langle\hat{O}_{1\mathrm{e}}\rangle \equiv \langle\Psi|\hat{O}_{1\mathrm{e}}|\Psi\rangle$$

$$N_\mathrm{e}\int \mathrm{d}\underline{\mathbf{x}}\,\delta(\mathbf{r}-\mathbf{r}_1)|\underline{\mathbf{x}},\mathbf{Q}\rangle\langle\underline{\mathbf{x}},\mathbf{Q}|$$

$$\rho(\mathbf{r},\mathbf{Q},t) = \sum_{p,q} \Big[\varphi_p^*(\mathbf{r};\mathbf{Q})\varphi_q(\mathbf{r};\mathbf{Q})\delta_{\sigma_p\sigma_q}$$

$$\times \mathcal{F}_{\mathbf{k}}\left\{\left\langle \hat{a}_p^\dagger \hat{a}_q \bigotimes_{\nu}^{N_{\text{mode}}} \hat{D}_\nu(i\xi_\nu)\right\rangle\right\}(\mathbf{Q})\Big]$$

$$\rho_{\text{e}}(\mathbf{r}) = \int \mathrm{d}\mathbf{Q}\rho(\mathbf{r},\mathbf{Q},t)$$

$$\rho_{\text{n}}(\mathbf{Q}) = \int \mathrm{d}\mathbf{r}\rho(\mathbf{r},\mathbf{Q},t)$$

$$\rho_{\text{n}}(\mathbf{Q},t) = \mathcal{F}_{\mathbf{k}}\left\{\left\langle \bigotimes_{\nu}^{N_{\text{mode}}} \hat{D}_\nu(i\xi_\nu)\right\rangle\right\}(\mathbf{Q}),$$

$$\frac{d\hat{\rho}}{dt} = -i[\hat{H},\hat{\rho}] + \sum_i \gamma_i D\big[\hat{L}_i\big]\hat{\rho}$$

$$D[\hat{L}]\hat{\rho} = \hat{L}\hat{\rho}\hat{L}^\dagger - \frac{1}{2}\{\hat{L}^\dagger\hat{L},\hat{\rho}\}$$

$$\gamma_{\text{mol}}^{\text{vib}} = \left(N_{\text{CNOT}}\frac{t_{\text{CNOT}}}{\Delta t_{\text{mol}}} + \frac{N_{\text{op}}}{F}\right)\gamma_{\text{mot}}^{\text{d}}$$

$$\gamma_{\text{mol}}^{\text{q}} = \frac{N_{\text{CNOT}}}{4N_{\text{o}}}\frac{t_{\text{CNOT}}}{\Delta t_{\text{mol}}}\gamma_{\text{mot}}^{\text{d}}$$

$$H_{\mathbf{mn}}^{\text{e}}(\mathbf{Q}) = \langle \mathbf{m}|\hat{H}^{\text{e}}(\mathbf{Q})|\mathbf{n}\rangle_{\text{e}}$$

$$\mathbf{E}^{\text{e}}(\mathbf{Q}) = \mathbf{W}(\mathbf{Q})\mathbf{H}^{\text{e}}(\mathbf{Q})\mathbf{W}^\dagger(\mathbf{Q})$$

$$\Psi_{\text{BH}}(\underline{\mathbf{x}},\mathbf{Q},t)$$
$$= \sum_j^{N_{\text{BO}}} \chi_j^{\text{BO}}(\mathbf{Q},t)\Phi_j^{\text{BO}}(\underline{\mathbf{x}};\mathbf{Q})$$
$$= \sum_j^{N_{\text{BO}}} \sum_{\mathbf{v}} T_{j\mathbf{v}}(t)\mathbf{v}(\mathbf{Q}) \sum_{\mathbf{n}} W_{j\mathbf{n}}(\mathbf{Q})\mathbf{n}(\underline{\mathbf{x}};\mathbf{Q}),$$

$$\mathbf{W}, \Phi_j^{\text{BO}}(\underline{\mathbf{x}};\mathbf{Q}) = \sum_{\mathbf{n}} W_{j\mathbf{n}}\mathbf{n}(\underline{\mathbf{x}};\mathbf{Q})$$

$$\chi_j^{\text{BO}}(\mathbf{Q},t) = \sum_{\mathbf{v}} T_{j\mathbf{v}}(t)\mathbf{v}(\mathbf{Q})$$

$$\sum_j^{N_{\text{CSF}}} \sum_{\mathbf{v}'} T_{j\mathbf{v}'}(t)\big(W_{j\mathbf{n}}\big)_{\mathbf{vv}'} = C_{\mathbf{vn}}(t)$$

$$\left(W_{j\mathbf{n}}\right)_{\mathbf{v}\mathbf{v}'} = \int \mathrm{d}\mathbf{Q}\mathbf{v}^*(\mathbf{Q})W_{j\mathbf{n}}(\mathbf{Q})\mathbf{v}'(\mathbf{Q})$$

$$\hat{H}_{\mathrm{cMQB}} = \omega\hat{b}^\dagger\hat{b} + \sum_I \left(V_0^I + V_1^I\left(\hat{b}^\dagger + \hat{b}\right)\right)\hat{P}_1^I\hat{P}_2^I\hat{P}_3^I\hat{P}_4^I$$

$$|\Psi(0)\rangle = \hat{D}\left(R_0\sqrt{M\omega/2}\right)|0\rangle_{\mathrm{n}} \otimes |1010\rangle_{\mathrm{q}}$$

$$\hat{R}_{XX}(\theta) = \exp\left(-i\frac{\theta}{2}\hat{X}_1\hat{X}_2\right)$$

$$N_{\mathrm{CSF}}(S, N_{\mathrm{o}}, N_{\mathrm{e}}) = \frac{2S+1}{N_{\mathrm{o}}/2+1}\binom{N_{\mathrm{o}}/2+1}{N_{\mathrm{e}}/2-S}\binom{N_{\mathrm{o}}/2+1}{N_{\mathrm{e}}/2+S+1}$$

$$O\left(N_{\mathrm{o}}^{-2}\left(m(m-1)^{1/m-1}\right)^{N_{\mathrm{o}}}\right)$$

$$\sum_\nu \langle\Phi_j^{\mathrm{BO}}|\frac{\partial^2}{\partial Q_\nu^2}|\Phi_k^{\mathrm{BO}}\rangle$$

$$h_{pq}(\mathbf{Q}) = \delta_{\sigma_p\sigma_q}\int \mathrm{d}\mathbf{r}\phi_p^*(\mathbf{r};\mathbf{Q})\left(-\frac{\nabla^2}{2} + v_{\mathrm{en}}(\mathbf{r},\mathbf{Q})\right)\phi_q(\mathbf{r};\mathbf{Q})$$

$$v_{pqrs}(\mathbf{Q}) = \delta_{\sigma_p\sigma_r}\delta_{\sigma_q\sigma_s}\int \mathrm{d}\mathbf{r}\int \mathrm{d}\mathbf{r}'\phi_p^*(\mathbf{r};\mathbf{Q})\phi_q^*(\mathbf{r}';\mathbf{Q})\frac{1}{|\mathbf{r}-\mathbf{r}'|}\phi_r(\mathbf{r};\mathbf{Q})\phi_s(\mathbf{r}';\mathbf{Q})$$

$$d_{\nu,pq}(\mathbf{Q}) = \delta_{\sigma_p\sigma_q}\int \mathrm{d}\mathbf{r}\phi_p^*(\mathbf{r};\mathbf{Q})\frac{\partial}{\partial Q_\nu}\phi_q(\mathbf{r};\mathbf{Q})$$

$$g_{\nu,pq}(\mathbf{Q}) = \delta_{\sigma_p\sigma_q}\int \mathrm{d}\mathbf{r}\phi_p^*(\mathbf{r};\mathbf{Q})\frac{\partial^2}{\partial Q_\nu^2}\phi_q(\mathbf{r};\mathbf{Q})$$

$$v_{\mathrm{en}}(\mathbf{r},\mathbf{Q}) = -\sum_\alpha \frac{Z_\alpha}{|\mathbf{r}-\mathbf{R}_\alpha|},$$

$$V_{\mathrm{nn}}(\mathbf{Q}) = \sum_{\alpha\beta}\frac{Z_\alpha Z_\beta}{|\mathbf{R}_\alpha - \mathbf{R}_\beta|},$$

$$\mathbf{R} = \begin{pmatrix}\mathbf{R}_1\\ \mathbf{R}_2\\ \vdots\\ \mathbf{R}_n\end{pmatrix}$$

$$\hat{H}(r_1, r_2, R) = -\frac{1}{2M}\frac{\partial^2}{\partial R^2} + V_{\mathrm{nn}}(R) + \hat{h}_{1\mathrm{e}}(r_1, R) + \hat{h}_{1\mathrm{e}}(r_2, R) + v_{\mathrm{ee}}(r_1, r_2)$$

$$V_{\mathrm{nn}}(R) = \frac{1}{2}kR^2,$$

$$\hat{h}_{1\mathrm{e}}(r, R) = -\frac{1}{2}\frac{\partial^2}{\partial r^2} - \frac{\mathrm{erf}\left(\frac{|R-r|}{C_{\mathrm{c}}}\right)}{|R-r|} - \frac{\mathrm{erf}\left(\frac{\left|r-\frac{L}{2}\right|}{C_{\mathrm{r}}}\right)}{\left|r-\frac{L}{2}\right|} - \frac{\mathrm{erf}\left(\frac{\left|r+\frac{L}{2}\right|}{C_1}\right)}{\left|r+\frac{L}{2}\right|},$$

$$v_{\mathrm{ee}}(r_1,r_2)=\frac{\mathrm{erf}\left(\frac{|r_1-r_2|}{C_{\mathrm{e}}}\right)}{|r_1-r_2|},$$

$$\begin{aligned}\hat{H}_{\mathrm{mol}}=&-\frac{1}{2M}\frac{\partial^2}{\partial R^2}+\frac{1}{2}kR^2+h_{aa}+h_{bb}+\frac{1}{4}(v_{aaaa}+v_{bbbb}+4v_{abab}-2v_{aabb})\\
&-\left(\frac{h_{aa}}{2}+\frac{1}{4}(v_{aaaa}+2v_{abab}-v_{aabb})\right)(\hat{Z}_1+\hat{Z}_3)-\left(\frac{h_{bb}}{2}+\frac{1}{4}(v_{bbbb}+2v_{abab}-v_{aabb})\right)(\hat{Z}_2+\hat{Z}_4)\\
&+\frac{1}{4}v_{aaaa}\hat{Z}_1\hat{Z}_3+\frac{1}{4}v_{bbbb}\hat{Z}_2\hat{Z}_4+\frac{1}{4}v_{abab}(\hat{Z}_1\hat{Z}_4+\hat{Z}_2\hat{Z}_3)+\frac{1}{4}(v_{abab}-v_{aabb})(\hat{Z}_1\hat{Z}_2+\hat{Z}_3\hat{Z}_4)\\
&+\left(\frac{h_{ab}}{2}+\frac{1}{4}(v_{aaab}+v_{abbb})\right)(\hat{X}_1\hat{X}_2+\hat{Y}_1\hat{Y}_2+\hat{X}_3\hat{X}_4+\hat{Y}_3\hat{Y}_4)\\
&+\frac{1}{4}v_{aabb}(\hat{X}_1\hat{X}_2\hat{X}_3\hat{X}_4+\hat{Y}_1\hat{Y}_2\hat{Y}_3\hat{Y}_4+\hat{X}_1\hat{X}_2\hat{Y}_3\hat{Y}_4+\hat{Y}_1\hat{Y}_2\hat{X}_3\hat{X}_4)\\
&-\frac{1}{4}v_{aaab}(\hat{Z}_1\hat{X}_3\hat{X}_4+\hat{Z}_1\hat{Y}_3\hat{Y}_4+\hat{X}_1\hat{X}_2\hat{Z}_3+\hat{Y}_1\hat{Y}_2\hat{Z}_3)\\
&-\frac{1}{4}v_{abbb}(\hat{Z}_2\hat{X}_3\hat{X}_4+\hat{Z}_2\hat{Y}_3\hat{Y}_4+\hat{X}_1\hat{X}_2\hat{Z}_4+\hat{Y}_1\hat{Y}_2\hat{Z}_4)\end{aligned}$$

$$\begin{aligned}\hat{H}_{\mathrm{cMQB}}=&\omega\hat{b}^\dagger\hat{b}+V_0^0+V_1^0(\hat{b}+\hat{b}^\dagger)+\left(V_0^1+V_1^1(\hat{b}+\hat{b}^\dagger)\right)(\hat{Z}_1+\hat{Z}_3)+\left(V_0^2+V_1^2(\hat{b}+\hat{b}^\dagger)\right)(\hat{Z}_2+\hat{Z}_4)\\
&+\left(V_0^3+V_1^3(\hat{b}+\hat{b}^\dagger)\right)\hat{Z}_1\hat{Z}_3+\left(V_0^4+V_1^4(\hat{b}+\hat{b}^\dagger)\right)\hat{Z}_2\hat{Z}_4\\
&+V_0^5(\hat{Z}_1\hat{Z}_4+\hat{Z}_2\hat{Z}_3)+V_0^6(\hat{Z}_1\hat{Z}_2+\hat{Z}_3\hat{Z}_4)\\
&+V_0^7(\hat{X}_1\hat{X}_2+\hat{Y}_1\hat{Y}_2+\hat{X}_3\hat{X}_4+\hat{Y}_3\hat{Y}_4)\\
&+V_0^8(\hat{X}_1\hat{X}_2\hat{X}_3\hat{X}_4+\hat{Y}_1\hat{Y}_2\hat{Y}_3\hat{Y}_4+\hat{X}_1\hat{X}_2\hat{Y}_3\hat{Y}_4+\hat{Y}_1\hat{Y}_2\hat{X}_3\hat{X}_4)\\
&+V_0^9(\hat{Z}_1\hat{X}_3\hat{X}_4+\hat{Z}_1\hat{Y}_3\hat{Y}_4+\hat{X}_1\hat{X}_2\hat{Z}_3+\hat{Y}_1\hat{Y}_2\hat{Z}_3)\\
&+V_0^{10}(\hat{Z}_2\hat{X}_3\hat{X}_4+\hat{Z}_2\hat{Y}_3\hat{Y}_4+\hat{X}_1\hat{X}_2\hat{Z}_4+\hat{Y}_1\hat{Y}_2\hat{Z}_4)\end{aligned}$$

$$\begin{aligned}\left|\Phi_1^{\mathrm{CSF}}\right\rangle&=|1010\rangle\\
\left|\Phi_2^{\mathrm{CSF}}\right\rangle&=|0101\rangle\\
\left|\Phi_3^{\mathrm{CSF}}\right\rangle&=\frac{1}{\sqrt{2}}(|1001\rangle+|0110\rangle)\end{aligned}$$

$$H_{\mathrm{el}}^{\mathrm{CSF}}=\begin{pmatrix}2h_{aa}+v_{aaaa} & v_{aabb} & \sqrt{2}(h_{ab}+v_{aaab})\\ v_{aabb} & 2h_{bb}+v_{bbbb} & \sqrt{2}(h_{ab}+v_{bbba})\\ \sqrt{2}(h_{ab}+v_{aaab}) & \sqrt{2}(h_{ab}+v_{bbba}) & h_{aa}+h_{bb}+v_{abab}+v_{aabb}\end{pmatrix}$$

$$\Phi_j^{\mathrm{BO}}(r_1,r_2;R)=\sum_i\Phi_i^{\mathrm{CSF}}(r_1,r_2;R)U_{ij}(R)$$

$$2\int dr_1\int dr_2\delta(r-r_1)|\Phi(r_1,r_2;R)|^2$$

$$D_{ij}=\left\langle\Phi_i^{\mathrm{BO}}\left|\frac{\partial}{\partial R}\Phi_j^{\mathrm{BO}}\right.\right\rangle$$

$$\hat{H}_{\mathrm{MS}}=\frac{\Omega}{2}\hat{S}_x(\hat{b}e^{i\delta t}+\hat{b}^\dagger e^{-i\delta t}),$$

$$R_{XX}(\pi/2) = \exp\left(-i\frac{\pi}{4}\hat{X}_p\hat{X}_q\right)$$

$$\hat{L} = \hat{n} + \left(a(t)\hat{b}^\dagger + a^*(t)\hat{b}\right)\hat{S}_x + |a(t)|^2\hat{S}_x^2$$

$$a(t) = -i\frac{\Omega}{2}\int^t e^{-i\delta t'}\,dt' = \frac{e^{-i\delta t}-1}{4}$$

$$\begin{aligned}\frac{d}{dt}\hat{\rho}_\mathrm{q} &\approx \gamma_\mathrm{mot}^\mathrm{d}\left\langle|a(t)|^2\right\rangle_\tau (2\langle\hat{n}\rangle+1)D\left[\hat{S}_x\right]\hat{\rho}_\mathrm{q} + \gamma_\mathrm{mot}^\mathrm{d}\left\langle|a(t)|^4\right\rangle_\tau D\left[\hat{S}_x^2\right]\hat{\rho}_\mathrm{q}\\ &\approx \frac{2\langle\hat{n}\rangle+1}{8}\gamma_\mathrm{mot}^\mathrm{d}D\left[\hat{S}_x\right]\hat{\rho}_\mathrm{q}\\ &\equiv \gamma^\mathrm{q}D\left[\hat{S}_x\right]\hat{\rho}_\mathrm{q}\end{aligned}$$

$$\langle f(t)\rangle_\tau \equiv \int^\tau f\,(t)dt/\tau$$

$$t_\mathrm{exp} = \left(t_\mathrm{CNOT}N_\mathrm{CNOT} + \Delta t_\mathrm{sim}N_\mathrm{op}\right)N_t$$

$$\alpha_\mathrm{vib} = \frac{t_\mathrm{exp}}{t_\mathrm{mol}} = N_\mathrm{CNOT}\frac{t_\mathrm{CNOT}}{\Delta t_\mathrm{mol}} + \frac{N_\mathrm{op}}{F}$$

$$\alpha_\mathrm{q} = \frac{t_\mathrm{CNOT}}{\Delta t_\mathrm{mol}}$$

$$\alpha_\mathrm{q}^\mathrm{eff} = \frac{2N_\mathrm{CNOT}}{N_\mathrm{q}}\alpha_\mathrm{q}$$

$$\gamma^\mathrm{q} \approx \frac{1}{8}\gamma_\mathrm{mot}^\mathrm{d}$$

$$\sum_\mathbf{n}\exp\left(-it\sum_p\left(h_{pp}+c\right)\hat{n}_p\right)|\mathbf{n}\rangle = \exp\left(-itcN_\mathrm{e}\right)\sum_\mathbf{n}\exp\left(-it\sum_p h_{pp}\hat{n}_p\right)|\mathbf{n}\rangle$$

$$\hat{H} = -\sum_I^{N_n}\frac{1}{2m_I}\nabla_{\mathbf{R}_I}^2 - \frac{1}{2}\sum_i^{N_e}\nabla_{\mathbf{r}_i}^2 + \sum_{i>j}\frac{1}{|\mathbf{r}_i-\mathbf{r}_j|} - \sum_i\sum_I\frac{Z_I}{|\mathbf{r}_i-\mathbf{R}_I|} + \sum_{I>J}\frac{Z_IZ_J}{|\mathbf{R}_I-\mathbf{R}_J|}.$$

$$\hat{H}\psi(\mathbf{r},\mathbf{R}) = E\psi(\mathbf{r},\mathbf{R})$$

$$\psi(\mathbf{r},\mathbf{R}) = \psi_e(\mathbf{r},\mathbf{R})\psi_n(\mathbf{r},\mathbf{R}),$$

$$\psi_n(\mathbf{r},\mathbf{R}) = \left(\sum_{m=1}^{N_b}c_m\exp\left[\sum_{I=1}^{N_n}\sum_{I\neq J}^{N_n}-\frac{\left(\alpha_{J,m}\right)^2}{d_{IJ}} - \left(\eta_{J,m}\right)^2 d_{IJ}\right]\right)^2$$

$$\psi_e(\mathbf{r},\mathbf{R}) = \sum_{n=1}^{N_\mathrm{def}}\det\left[\phi_i^n\left(\mathbf{r}_j;\mathbf{r},\mathbf{R}\right)\right]$$

$$\phi_i^n(\mathbf{r}_j;\mathbf{r},\mathbf{R}) = \Lambda_{ij}^n(\mathbf{r}_j;\mathbf{r},\mathbf{R})\Omega^n(\mathbf{r}_j;\mathbf{R})\Theta(\mathbf{r},\mathbf{R}).$$

$$\Omega^n(\mathbf{r}_j;\mathbf{R}) = \sum_I^{N_n} \exp\left(-|\alpha_{jI} d_{jI}|\right).$$

$$\Theta(\mathbf{r},\mathbf{R}) = \sum_{i>j}^{N_e} \exp\left(\frac{c d_{ij}}{1+d_{ij}}\right) + \sum_I^{N_n}\sum_i^{N_e} \exp\left(\frac{-Z_I d_{iI}}{1+d_{iI}}\right).$$

$$\mathcal{L} = \sum_i (E_L(\mathbf{r}_i,\mathbf{R}_i) - E)^2$$

$$E_L(\mathbf{r},\mathbf{R}) = \frac{\hat{H}\psi(\mathbf{r},\mathbf{R})}{\psi(\mathbf{r},\mathbf{R})}$$

$$\mathcal{L} = \sum_i \left(H\psi(\mathbf{r}_i,\mathbf{R}_i) - E\psi(\mathbf{r}_i,\mathbf{R}_i)\right)^2 + \mathcal{L}_{\text{reg}}$$

$$\{\boldsymbol{\alpha},\mathbf{c},\ldots\} = f\left(Z_i Z_j, Z_i + Z_j\right),$$

$$\chi_{lmk}(\vec{\mathbf{r}}_{ij}) = Y_{lm}(\vec{\mathbf{r}}_{ij})\sum_n^{N_\chi} \omega_{n,k}^{t+1} \exp\left[-\beta_n\left(d_{ij} - d_n\right)^2\right],$$

$$\varphi_{i,lmk}^0 = \sum_{j\neq i}^{N} c_j^0 \chi_{lmk}(\vec{\mathbf{r}}_{ij}).$$

$$\varphi_{i,lmk}^{t+1} = \sum_{j\neq i}^{N} c_j^t \sum_{m_f,m_i} C_{l_i,\,\mathrm{m}_i,l_f,\,\mathrm{m}_f}\varpi_{l_i,l_f,l}\chi_{l_i,\,\mathrm{m}_i,k}(\vec{\mathbf{r}}_{ij})\varphi_{j,l_f,\,\mathrm{m}_f,k}^t$$

$$\rho_{i,lk}^{t+1} = \sum_{m=-l}^{l} \left(\varphi_{i,lmk}^{t+1}\right)^2$$

$$E(\mathbf{R}) = \sum_{i=1}^{N} \hat{H}_e\psi(\mathbf{r}_i,\mathbf{R})/\psi(\mathbf{r}_i,\mathbf{R})/N$$

$$E_{\text{DBOC}} = \left\langle\left(-\sum_I^{N_n} \frac{1}{2m_I}\nabla_{\mathbf{R}_I}^2\psi_{el}\right)/\psi_{el}\right\rangle,$$

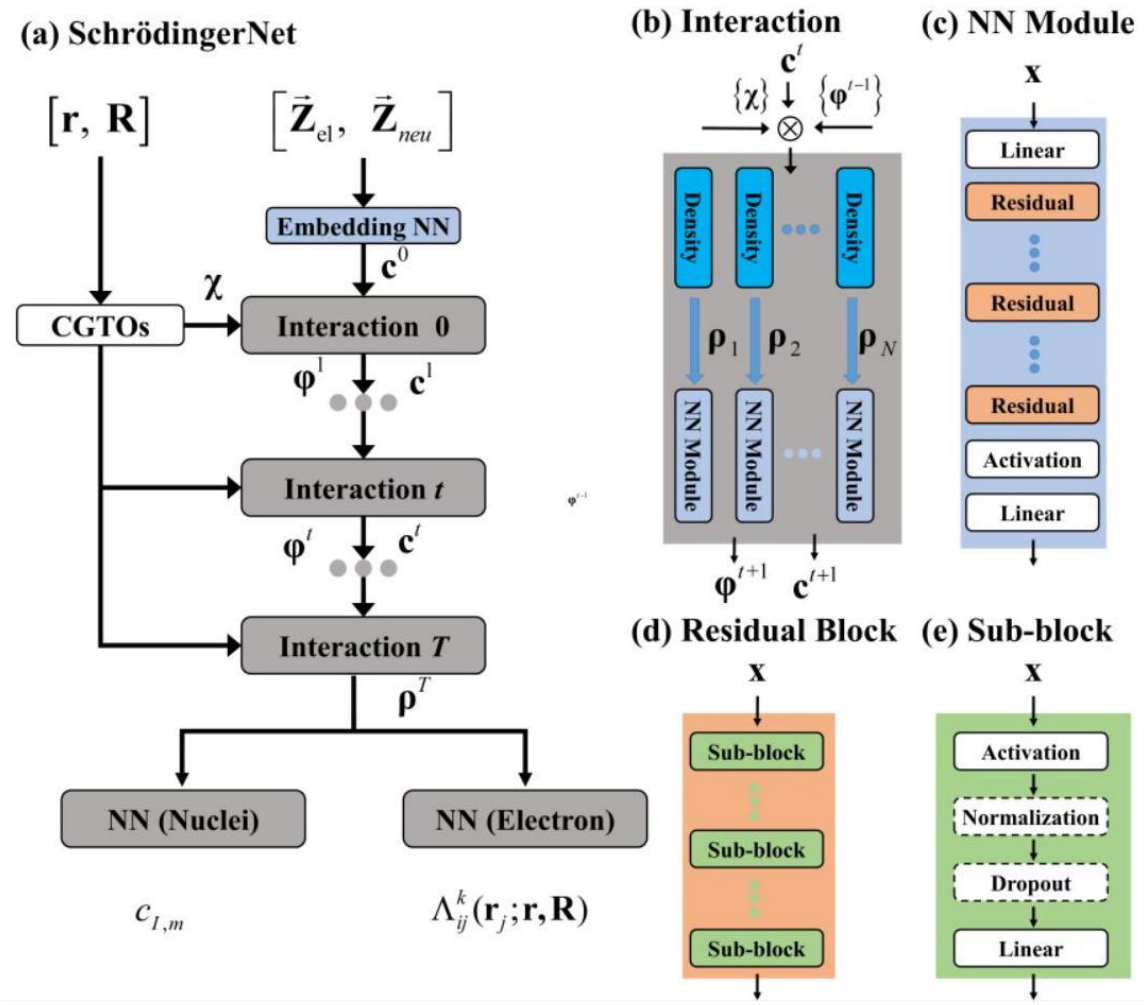
(a) SchrödingerNet
[r, R]
[Z_el, Z_neu]
Embedding NN
c^0
χ
CGTOs
Interaction 0
φ^1
c^1
Interaction t
φ^t
c^t
Interaction T
ρ^T
NN (Nuclei)
NN (Electron)
c_{I,m}
Λ^k_ij(r_j;r,R)
(b) Interaction
c^t
{χ}
{φ^{t-1}}
Density
Density
Density
ρ_1
ρ_2
ρ_N
NN Module
NN Module
NN Module
φ^{t+1}
c^{t+1}
(c) NN Module
x
Linear
Residual
Residual
Residual
Activation
Linear
(d) Residual Block
x
Sub-block
Sub-block
Sub-block
(e) Sub-block
x
Activation
Normalization
Dropout
Linear

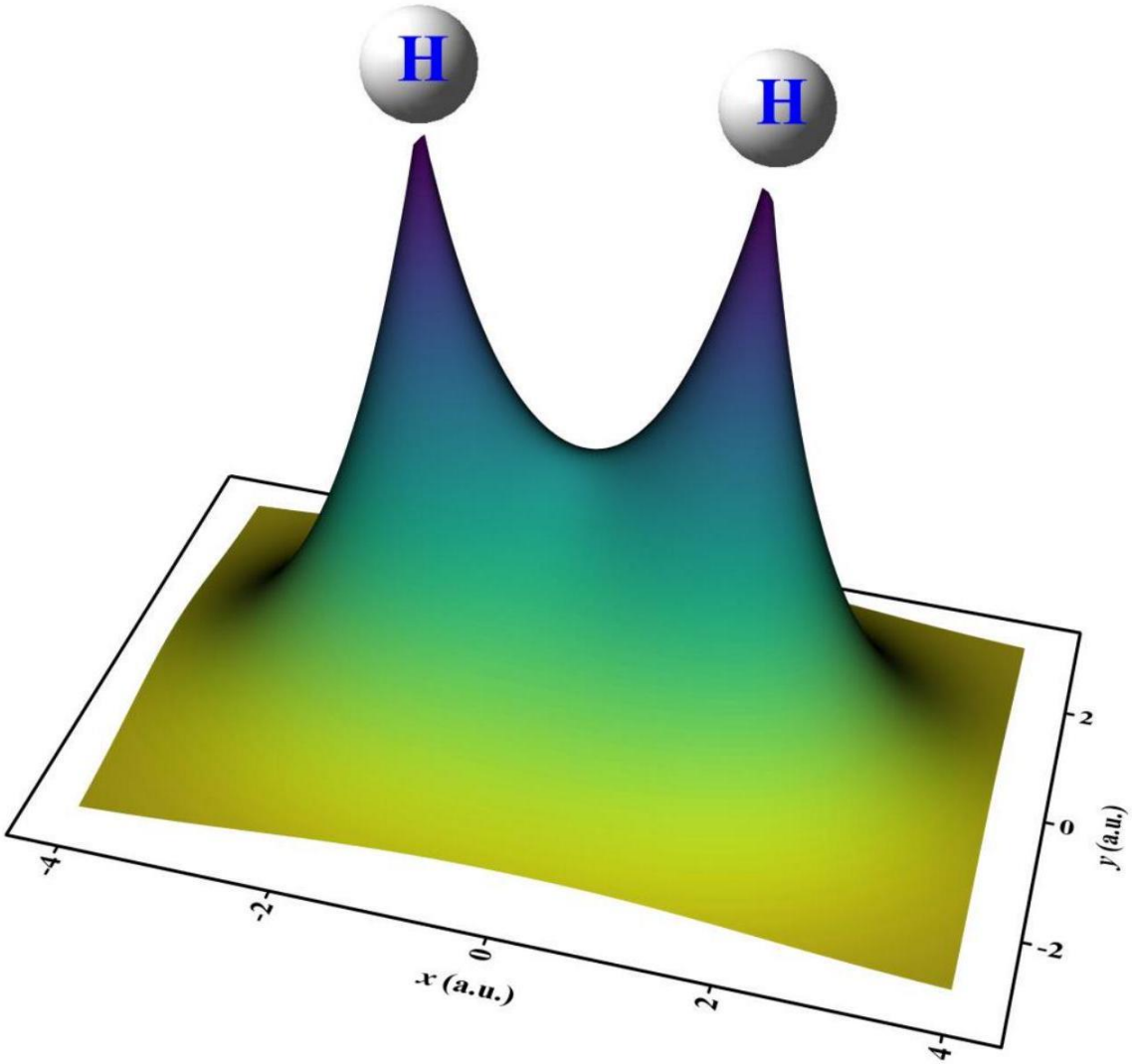
H
H
-4
-2
0
2
4
x (a.u.)
-2
0
2
y (a.u.)

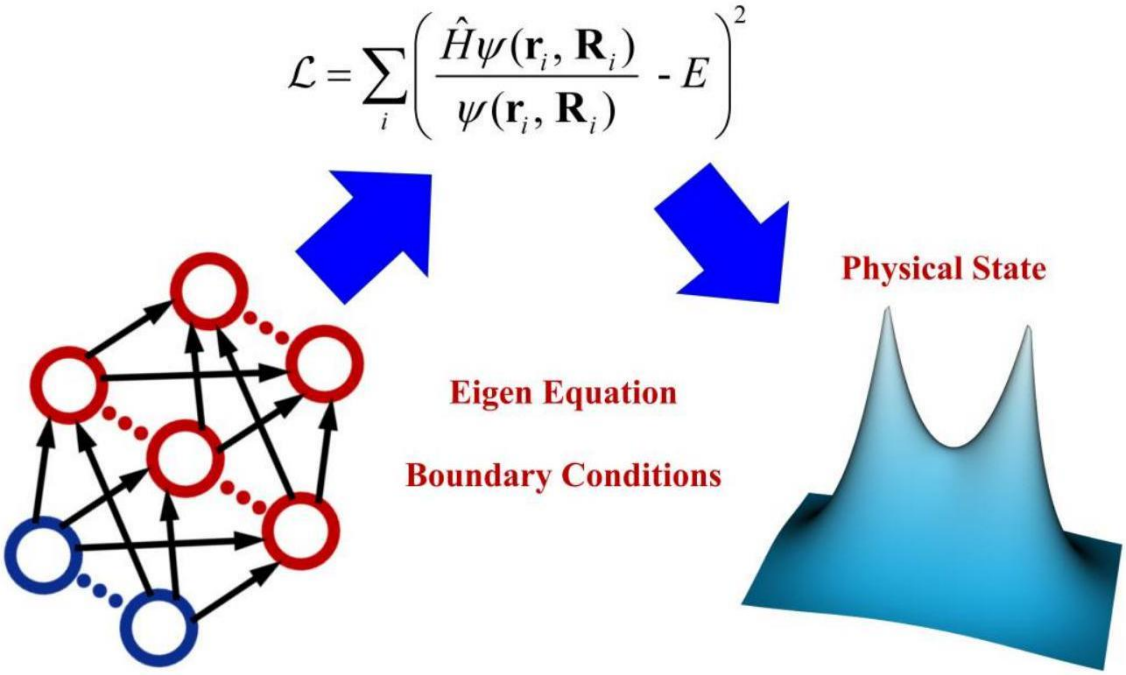

$$|\mathrm{HF}\rangle = \exp\left(\sum_{ai} \kappa_{ai} E_{ai}^{-}\right)|\Phi_0\rangle$$

$$E_{ai}^{-} = E_{ai} - E_{ia}, E_{ai} = \sum_{\sigma} a_{a\sigma}^{\dagger} a_{i\sigma}$$

$$\mathcal{E}_{\mathrm{HF}} = \langle \mathrm{HF}|H|\mathrm{HF}\rangle,$$

$$\mathcal{E}(\boldsymbol{\gamma}) = \langle \mathrm{HF}|\exp(-\gamma) H \exp(\gamma)|\mathrm{HF}\rangle$$

$$G_{ai}^{(0)}(\mathbf{0}) = \left.\frac{\partial \mathcal{E}}{\partial \gamma_{ai}}\right|_{\gamma=\mathbf{0}} = \langle \mathrm{HF}|[H, E_{ai}^{-}]|\mathrm{HF}\rangle$$

$$G_{ai,bj}^{(1)}(\mathbf{0}) = \left.\frac{\partial^2 \mathcal{E}}{\partial \gamma_{ai} \partial \gamma_{bj}}\right|_{\gamma=\mathbf{0}} = \frac{1}{2} P_{ai,bj} \langle \mathrm{HF}| \left[[H, E_{ai}^{-}], E_{bj}^{-}\right] |\mathrm{HF}\rangle,$$

$$\begin{pmatrix} \mathbf{A} & \mathbf{B} \\ \mathbf{B} & \mathbf{A} \end{pmatrix} \begin{pmatrix} \mathbf{X} \\ \mathbf{Y} \end{pmatrix} = \omega \begin{pmatrix} \mathbf{1} & \mathbf{0} \\ \mathbf{0} & -\mathbf{1} \end{pmatrix} \begin{pmatrix} \mathbf{X} \\ \mathbf{Y} \end{pmatrix}$$

$$A_{ia,jb} = \delta_{ij}\delta_{ab}(\varepsilon_a - \varepsilon_i) + 2g_{aijb} - g_{abji}$$
$$B_{ia,jb} = 2g_{aibj} - g_{ajbi}$$

$$G_{ai}^{(0)}(\gamma) = G_{ai}^{(0)}(\mathbf{0}) + \sum_{bj} G_{ai,bj}^{(1)}(\mathbf{0})\gamma_{bj} + \cdots = 0$$

$$G_n^{(0)}(\gamma) = G_n^{(0)}(\mathbf{0}) + \lambda_n \gamma_n + \cdots = 0.$$

$$\tilde{\mathbf{G}}^{(0)} = \mathbf{G}^{(0)} - \mathbf{r}_1\left(\mathbf{r}_1^T \mathbf{G}^{(0)}\right).$$

$$\kappa = \sum_{ai} \kappa_{ai} E_{ai}^{-} = \sum_{n} \kappa_n R_n$$

$$R_n = \sum_{ai} r_{ai,n} E_{ai}^{-}$$

$$\tilde{\kappa}_{ai} = \kappa_{ai} - r_{ai,1} \sum_{bj} r_{bj,1} \kappa_{bj}$$

$$\tilde{\mathbf{G}}^{(0)} = 0$$
$$\mathbf{G}^{(1)} \mathbf{r}_1 = \lambda_1 \mathbf{r}_1,$$

$$\{|\mathrm{HF}\rangle, |R_1\rangle, |\tilde{\nu}\rangle = |\nu\rangle - |R_1\rangle\langle R_1 \mid \nu\rangle\}$$

$$\frac{1}{\sqrt{2}} \sum_{ai} r_{ai,1} E_{ai} |\mathrm{HF}\rangle$$

$$\mathbf{H}^{\mathrm{FS}} = \begin{pmatrix} \langle \mathrm{HF}|H|\mathrm{HF}\rangle & \langle \mathrm{HF}|H|R_1\rangle & 0 \\ \langle R_1|H|\mathrm{HF}\rangle & \langle \mathrm{R}_1|H|R_1\rangle & \langle R_1|H|\tilde{\nu}\rangle \\ 0 & \langle \tilde{\mu}|H|R_1\rangle & \langle \tilde{\mu}|H|\tilde{\nu}\rangle \end{pmatrix},$$

$$\mathbf{H}^{\mathrm{FS}} \mathbf{x}_n = \mathcal{E}_n \mathbf{S}^{\mathrm{FS}} \mathbf{x}_n$$

$$\mathbf{S}^{\mathrm{FS}} = \begin{pmatrix} 1 & \langle \mathrm{HF} \mid R_1\rangle & \langle \mathrm{HF} \mid \tilde{\nu}\rangle \\ \langle R_1 \mid \mathrm{HF}\rangle & 1 & \langle R_1 \mid \tilde{\nu}\rangle \\ \langle \tilde{\mu} \mid \mathrm{HF}\rangle & \langle \tilde{\mu} \mid R_1\rangle & \langle \tilde{\mu} \mid \tilde{\nu}\rangle \end{pmatrix} = \begin{pmatrix} 1 & 0 & 0 \\ 0 & 1 & 0 \\ 0 & 0 & \langle \tilde{\mu} \mid \tilde{\nu}\rangle \end{pmatrix}$$

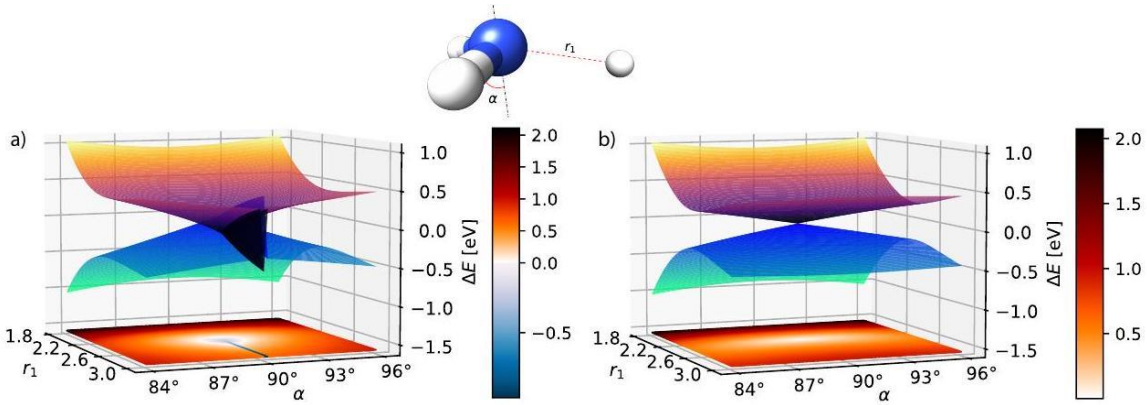

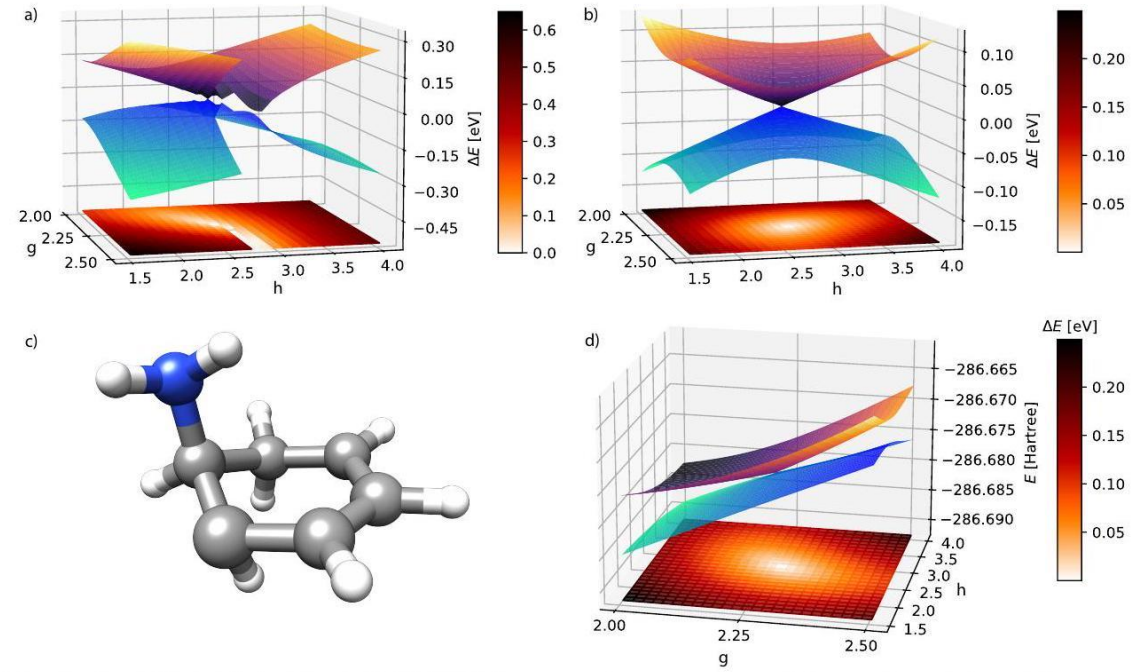

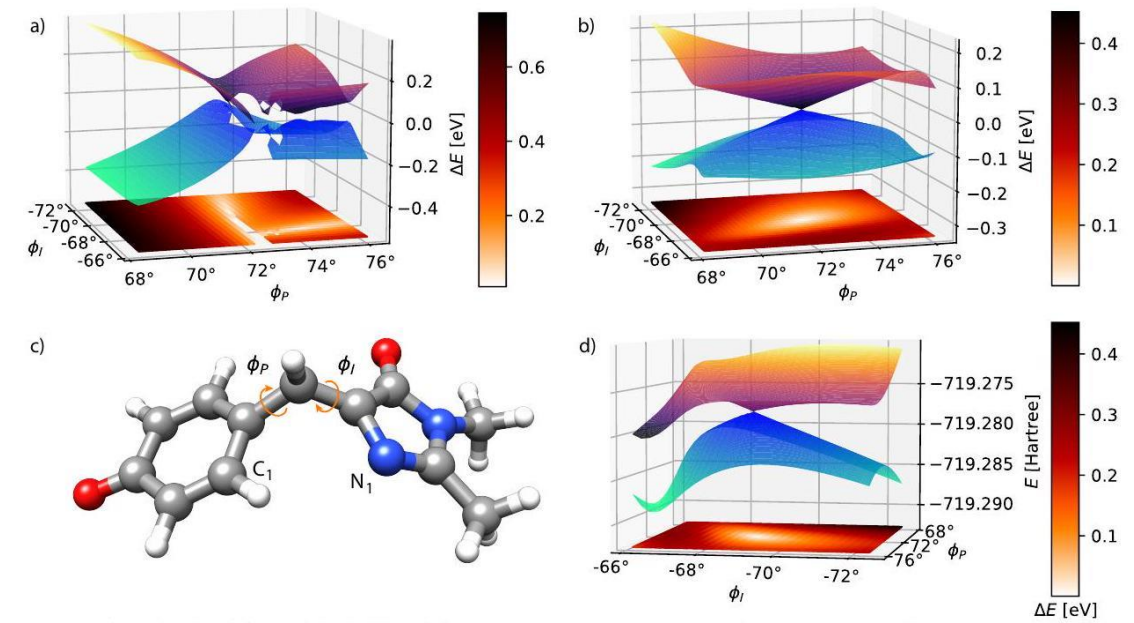

$$|\psi_A\rangle = |\mathrm{HF}_A\rangle x_0^A + |R_A\rangle x_1^A$$
$$|\psi_B\rangle = |\mathrm{HF}_B\rangle x_0^B + |R_B\rangle x_1^B$$

$$|\psi\rangle = |\mathrm{HF}\rangle x_0 + |R_1\rangle x_1 + |R_2\rangle x_2,$$

$$|\mathrm{HF}\rangle = |\mathrm{HF}_A\rangle|\mathrm{HF}_B\rangle$$
$$|R_1\rangle = |R_A\rangle|\mathrm{HF}_B\rangle$$
$$|R_2\rangle = |\mathrm{HF}_A\rangle|R_B\rangle.$$

$C_0 \leftarrow$ SAD guess
Initialize $n = 0$, $\boldsymbol{\kappa}^{[0]} = \mathbf{0}$ and $C^{[0]} = C_0$
while ($n < n_{\max}$ **and** $\|\tilde{\mathbf{G}}^{(0)}\|_{L_2} >$ threshold) **do**
  Solve the eigenvalue problem $\mathbf{G}^{(1)[n]}\mathbf{r}_i^{[n]} = \lambda_i^{[n]}\mathbf{r}_i^{[n]}, \quad i = 1, \ldots, n_{\text{excited}}$
  Construct $\mathbf{G}^{(0)[n]}$ and $\hat{P}^{[n]} = \mathcal{I} - \sum_{i=1}^{n_{\text{proj}}} \mathbf{r}_i^{[n]}\mathbf{r}_i^{[n]T}$
  $\tilde{\mathbf{G}}^{(0)[n]} \leftarrow \hat{P}^{[n]}\mathbf{G}^{(0)[n]}$
  Solve $\hat{P}^{[n]}\mathbf{G}^{(1)[n]}\hat{P}^{[n]}\Delta\boldsymbol{\kappa}^{[n]} = -\tilde{\mathbf{G}}^{(0)[n]}$ for $\Delta\boldsymbol{\kappa}^{[n]}$
  $\boldsymbol{\kappa}^{[n+1]} \leftarrow \hat{P}^{[n]}(\boldsymbol{\kappa}^{[n]} + \Delta\boldsymbol{\kappa}^{[n]})$
  $C^{[n+1]} \leftarrow C_0 \exp(\boldsymbol{\kappa}^{[n+1]})$
  $n \leftarrow n + 1$
end while
Construct and diagonalize the reduced matrix $\mathbf{H}^{\text{RS}}$
Solve the final eigenproblem $\mathbf{H}^{\text{FS}}\mathbf{x}_j = \mathcal{E}_j\mathbf{x}_j, \quad j = 1, \ldots, n_{\text{excited}} + 1$

$$\mathbf{H}^{\text{FS}} = \begin{pmatrix} \langle \text{HF}|H|\text{HF}\rangle & \langle \text{HF}|H|\text{R}_1\rangle & \langle \text{HF}|H|\tilde{\nu}\rangle \\ \langle \text{R}_1|H|\text{HF}\rangle & \langle \text{R}_1|H|\text{R}_1\rangle & \langle \text{R}_1|H|\tilde{\nu}\rangle \\ \langle \tilde{\mu}|H|\text{HF}\rangle & \langle \tilde{\mu}|H|\text{R}_1\rangle & \langle \tilde{\mu}|H|\tilde{\nu}\rangle \end{pmatrix} = \begin{pmatrix} E_0 & \mathbf{F}_{OV}\mathbf{r}_1 & 0 \\ \mathbf{F}_{OV}\mathbf{r}_1 & E_0 + \mathbf{r}_1^T\mathbf{A}\mathbf{r}_1 & V_\nu \\ 0 & V_\mu & Z_{\mu\nu} + \delta_{\mu\nu}E_0 \end{pmatrix}$$

$$\begin{aligned} V_\mu &= \langle \tilde{\mu}|H|\text{R}_1\rangle = \langle \mu|H|\text{R}_1\rangle - \langle \mu \mid \text{R}_1\rangle\langle \text{R}_1|H|\text{R}_1\rangle \\ &= \sum_\nu \left(E_0\delta_{\mu\nu} + A_{\mu\nu}\right)r_{1,\nu} - r_{1,\mu}(E_0 + \mathbf{r}_1^T\mathbf{A}\mathbf{r}_1) \\ &= A_{\mu\nu}r_{1,\nu} - r_{1,\mu}\mathbf{r}_1^T\mathbf{A}\mathbf{r}_1 \end{aligned}$$

$$\begin{aligned} Z_{\mu\nu} = \langle \tilde{\mu}|H|\tilde{\nu}\rangle - \delta_{\mu\nu}E_0 &= \langle \mu|H|\nu\rangle - \delta_{\mu\nu}E_0 - \langle \tilde{\mu}|H|\text{R}_1\rangle\langle \text{R}_1 \mid \nu\rangle + \\ &-\langle \mu \mid \text{R}_1\rangle\langle \text{R}_1|H|\tilde{\mu}\rangle - \langle \mu \mid \text{R}_1\rangle\langle \text{R}_1|H|\text{R}_1\rangle\langle \text{R}_1 \mid \nu\rangle \\ &= A_{\mu\nu} - r_{1,\mu}V_\nu - V_\mu r_{1,\nu} - r_{1,\mu}r_{1,\nu}(E_0 + \mathbf{r}_1^T\mathbf{A}\mathbf{r}_1) \end{aligned}$$

$$\mathbf{H}^{\text{RS}} = \begin{pmatrix} \langle \text{HF}|H|\text{HF}\rangle & \langle \text{HF}|H|\text{R}_1\rangle & \ldots & \langle \text{HF}|H|\text{R}_N\rangle \\ \langle \text{R}_1|H|\text{HF}\rangle & \langle \text{R}_1|H|\text{R}_1\rangle & \ldots & \langle \text{R}_1|H|\text{R}_N\rangle \\ \vdots & \vdots & \ddots & \vdots \\ \langle \text{R}_N|H|\text{HF}\rangle & \langle \text{R}_N|H|\text{R}_1\rangle & \ldots & \langle \text{R}_N|H|\text{R}_N\rangle \end{pmatrix} = \begin{pmatrix} E_0 & \mathbf{F}_{OV}\mathbf{r}_1 & \ldots & \mathbf{F}_{OV}\mathbf{r}_N \\ \mathbf{F}_{OV}\mathbf{r}_1 & E_0 + \mathbf{r}_1^T\mathbf{A}\mathbf{r}_1 & \ldots & \mathbf{r}_1^T\mathbf{A}\mathbf{r}_N \\ \vdots & \vdots & \ddots & \vdots \\ \mathbf{F}_{OV}\mathbf{r}_N & \mathbf{r}_N^T\mathbf{A}\mathbf{r}_1 & \ldots & E_0 + \mathbf{r}_N^T\mathbf{A}\mathbf{r}_N \end{pmatrix}$$

$$W_{IJ} = \langle \text{R}_I|H|\text{R}_J\rangle - \delta_{IJ}E_0 = \mathbf{r}_I^T\mathbf{A}\mathbf{r}_J$$

$$\mathbf{H}^{\text{FS}} = \begin{pmatrix} \langle \text{HF}|H|\text{HF}\rangle & \langle \text{HF}|H|\text{R}_1\rangle & \ldots & \langle \text{HF}|H|\text{R}_N\rangle & \langle \text{HF}|H|\tilde{\nu}\rangle \\ \langle \text{R}_1|H|\text{HF}\rangle & \langle \text{R}_1|H|\text{R}_1\rangle & \ldots & \langle \text{R}_1|H|\text{R}_N\rangle & \langle \text{R}_1|H|\tilde{\nu}\rangle \\ \vdots & \vdots & \ddots & \vdots & \vdots \\ \langle \text{R}_N|H|\text{HF}\rangle & \langle \text{R}_N|H|\text{R}_1\rangle & \ldots & \langle \text{R}_N|H|\text{R}_N\rangle & \langle \text{R}_N|H|\tilde{\nu}\rangle \\ \langle \tilde{\mu}|H|\text{HF}\rangle & \langle \tilde{\mu}|H|\text{R}_1\rangle & \ldots & \langle \tilde{\mu}|H|\text{R}_N\rangle & \langle \tilde{\mu}|H|\tilde{\nu}\rangle \end{pmatrix} = \begin{pmatrix} E_0 & \mathbf{F}_{OV}\mathbf{r}_1 & \ldots & \mathbf{F}_{OV}\mathbf{r}_N & X_\nu \\ \mathbf{F}_{OV}\mathbf{r}_1 & E_0 + \mathbf{r}_1^T\mathbf{A}\mathbf{r}_1 & \ldots & \mathbf{r}_1^T\mathbf{A}\mathbf{r}_N & Y_{1,\nu} \\ \vdots & \vdots & \ddots & \vdots & \vdots \\ \mathbf{F}_{OV}\mathbf{r}_N & \mathbf{r}_N^T\mathbf{A}\mathbf{r}_1 & \ldots & E_0 + \mathbf{r}_N^T\mathbf{A}\mathbf{r}_N & Y_{N,\nu} \\ 0 & V_{1,\mu} & \ldots & V_{N,\mu} & Z_{\mu\nu} + \delta_{\mu\nu}E_0 \end{pmatrix}$$

$$X_\nu = \langle \mathrm{HF}|H|\tilde{\nu}\rangle = \eta_\nu - \sum_I (\boldsymbol{\eta}^T \mathbf{r}_I)\mathrm{R}_{I\nu}$$

$$Y_{I,\nu} = \langle \mathrm{R}_I|H|\tilde{\nu}\rangle = \langle \mathrm{R}_I|H|\nu\rangle - \sum_J \left(E_0\delta_{IJ} + W_{IJ}\right)\mathrm{R}_{J\nu}$$

$$V_{I,\mu} = \langle \tilde{\mu}|H|\mathrm{R}_I\rangle = \langle \mu|H|\mathrm{R}_I\rangle - \sum_J \mathrm{R}_{J\mu}\left(E_0\delta_{IJ} + W_{JI}\right)$$

$$Z_{\mu\nu} = \langle \tilde{\mu}|H|\tilde{\nu}\rangle = \langle \mu|H|\nu\rangle - \delta_{\mu\nu}E_0 - \sum_I \mathrm{R}_{I\mu}Y_{I,\nu} - \sum_I V_{I,\mu}\mathrm{R}_{I\nu} - \sum_{IJ} \mathrm{R}_{I\mu}\left(E_0\delta_{IJ} + W_{IJ}\right)\mathrm{R}_{J\nu}$$

$$\mathbf{H}^{\mathrm{FS}}\mathbf{x}_n = \mathcal{E}_n\mathbf{S}^{\mathrm{FS}}\mathbf{x}_n$$

$$\mathbf{H}^{\mathrm{FS}} = \begin{pmatrix} \langle \mathrm{HF}|H|\mathrm{HF}\rangle & \langle \mathrm{HF}|H|\mathrm{R}_1\rangle & 0 \\ \langle \mathrm{R}_1|H|\mathrm{HF}\rangle & \langle \mathrm{R}_1|H|\mathrm{R}_1\rangle & \langle \mathrm{R}_1|H|\tilde{\nu}\rangle \\ 0 & \langle \tilde{\mu}|H|\mathrm{R}_1\rangle & \langle \tilde{\mu}|H|\tilde{\nu}\rangle \end{pmatrix}$$

$$\mathbf{S}^{\mathrm{FS}} = \begin{pmatrix} 1 & \langle \mathrm{HF} \mid R_1\rangle & \langle \mathrm{HF} \mid \tilde{\nu}\rangle \\ \langle R_1 \mid \mathrm{HF}\rangle & 1 & \langle R_1 \mid \tilde{\nu}\rangle \\ \langle \tilde{\mu} \mid \mathrm{HF}\rangle & \langle \tilde{\mu} \mid R_1\rangle & \langle \tilde{\mu} \mid \tilde{\nu}\rangle \end{pmatrix} = \begin{pmatrix} 1 & 0 & 0 \\ 0 & 1 & 0 \\ 0 & 0 & \langle \tilde{\mu} \mid \tilde{\nu}\rangle \end{pmatrix}.$$

$$\mathbf{H}^{\mathrm{FS}}\mathbf{x}_n = \mathcal{E}_n\mathbf{x}_n$$

$$\mathbf{S}^{\mathrm{FS}}\mathbf{x} - \mathbf{x} = \begin{pmatrix} 1 & 0 & 0 \\ 0 & 1 & 0 \\ 0 & 0 & \langle \tilde{\mu} \mid \tilde{\nu}\rangle \end{pmatrix}\begin{pmatrix} x_0 \\ x_1 \\ x_\nu \end{pmatrix} - \begin{pmatrix} x_0 \\ x_1 \\ x_\mu \end{pmatrix} = \begin{pmatrix} 0 \\ 0 \\ -r_{1,\mu}r_{1,\nu}x_\nu \end{pmatrix}$$

$$\langle \tilde{\mu}|\bar{H}|R_1\rangle x_1 + \sum_\nu \langle \tilde{\mu}|\bar{H}|\tilde{\nu}\rangle x_\nu = \mathcal{E}x_\mu$$

$$\begin{aligned} \sum_\mu r_{1,\mu}x_\mu &= \frac{1}{\mathcal{E}}\sum_\mu r_{1,\mu}\langle \tilde{\mu}|\left(\bar{H}|R_1\rangle x_1 + \sum_\nu \bar{H}|\tilde{\nu}\rangle x_\nu\right) \\ &= \frac{1}{\mathcal{E}}\sum_\mu r_{1,\mu}\left(\langle \mu| - r_{1,\mu}\langle R_1|\right)\left(\bar{H}|R_1\rangle x_1 + \sum_\nu \bar{H}|\tilde{\nu}\rangle x_\nu\right) \\ &= \frac{1}{\mathcal{E}}\left(\langle R_1| - \langle R_1|\right)\left(\bar{H}|R_1\rangle x_1 + \sum_\nu \bar{H}|\tilde{\nu}\rangle x_\nu\right) = 0. \end{aligned}$$

$$\mathbf{H}_A^{\mathrm{RS}} = \begin{pmatrix} \langle \mathrm{HF}_A|H_A|\mathrm{HF}_A\rangle & \langle \mathrm{HF}_A|H_A|R_A\rangle \\ \langle R_A|H_A|\mathrm{HF}_A\rangle & \langle \mathrm{R}_A|H_A|R_A\rangle \end{pmatrix} = \begin{pmatrix} E_0^A & c_A \\ c_A & E_1^A \end{pmatrix}$$

$$\mathbf{H}_B^{\mathrm{RS}} = \begin{pmatrix} \langle \mathrm{HF}_B|H_B|\mathrm{HF}_B\rangle & \langle \mathrm{HF}_B|H_B|R_B\rangle \\ \langle R_B|H_B|\mathrm{HF}_B\rangle & \langle \mathrm{R}_B|H_B|R_B\rangle \end{pmatrix} = \begin{pmatrix} E_0^B & c_B \\ c_B & E_1^B \end{pmatrix}.$$

$$\mathbf{H}^{\mathrm{RS}} = \begin{pmatrix} \langle \mathrm{HF}|H|\mathrm{HF}\rangle & \langle \mathrm{HF}|H|R_1\rangle & \langle \mathrm{HF}|H|R_2\rangle & \langle \mathrm{HF}|H|R_1R_2\rangle \\ \langle R_1|H|\mathrm{HF}\rangle & \langle R_1|H|R_1\rangle & \langle R_1|H|R_2\rangle & \langle R_1|H|R_1R_2\rangle \\ \langle R_2|H|\mathrm{HF}\rangle & \langle R_2|H|R_1\rangle & \langle R_2|H|R_2\rangle & \langle R_2|H|R_1R_2\rangle \\ \langle R_1R_2|H|\mathrm{HF}\rangle & \langle R_1R_2|H|R_1\rangle & \langle R_1R_2|H|R_2\rangle & \langle R_1R_2|H|R_1R_2\rangle \end{pmatrix}.$$

$$|\mathrm{HF}\rangle = |\mathrm{HF}_A\rangle|\mathrm{HF}_B\rangle$$
$$|R_1\rangle = |R_A\rangle|\mathrm{HF}_B\rangle$$
$$|R_2\rangle = |\mathrm{HF}_A\rangle|R_B\rangle$$
$$|R_1R_2\rangle = |R_A\rangle|R_B\rangle.$$

$$\mathbf{H}^{\mathrm{RS}} = \begin{pmatrix} E_0^A + E_0^B & c_A & c_B & 0 \\ c_A & E_1^A + E_0^B & 0 & c_B \\ c_B & 0 & E_0^A + E_1^B & c_A \\ 0 & c_B & c_A & E_1^A + E_1^B \end{pmatrix}.$$

$$\mathbf{H}_B^{\mathrm{RS}} \oplus \mathbf{H}_A^{\mathrm{RS}} = \mathbf{H}_B^{\mathrm{RS}} \otimes \mathbf{I}_2 + \mathbf{I}_2 \otimes \mathbf{H}_A^{\mathrm{RS}}$$

$$\iiint d\vec{r}_1 \iiint d\vec{r}_2\, \phi_\mu(\vec{r}_1)\phi_\nu(\vec{r}_1)\frac{1}{r_{12}}\phi_\lambda(\vec{r}_2)\phi_\sigma(\vec{r}_2) \xrightarrow[\text{Hypercontraction}]{\text{Tensor}}$$

$$(\mu\nu \mid \lambda\sigma) = \iiint d\vec{r}_1 \iiint d\vec{r}_2 \phi_\mu(\vec{r}_1)\phi_\nu(\vec{r}_1)\frac{1}{r_{12}}\phi_\lambda(\vec{r}_2)\phi_\sigma(\vec{r}_2)$$

$$F_{\mu\nu} = h_{\mu\nu} + J_{\mu\nu} - \frac{1}{2}K_{\mu\nu}$$

$$J_{\mu\nu} = \sum_{\lambda\sigma} (\mu\nu \mid \lambda\sigma) D_{\lambda\sigma}$$
$$K_{\mu\nu} = \sum_{\lambda\sigma} (\mu\lambda \mid \nu\sigma) D_{\lambda\sigma}$$

$$D_{\mu\nu} = 2\sum_i C_{i\mu}C_{i\nu}$$

$$(\mu\nu \mid \lambda\sigma) \approx \sum_P \sum_Q X_\mu^P X_\nu^P Z^{PQ} X_\lambda^Q X_\sigma^Q$$

$$O = \frac{1}{2}\left\| (\mu\nu \mid \lambda\sigma) - \sum_P \sum_Q X_\mu^P X_\nu^P Z^{PQ} X_\lambda^Q X_\sigma^Q \right\|_F^2$$

$$X_\mu^P = (\omega_P)^{\frac{1}{4}} \phi_\mu(\vec{r}_P)$$

$$(A \mid B) = \iiint d\vec{r}_1 \iiint d\vec{r}_2 \chi_A(\vec{r}_1)\frac{1}{r_{12}}\chi_B(\vec{r}_2)$$

$$(A \mid B) \approx \sum_P \sum_Q X_A^P \tilde{Z}^{PQ} X_B^Q$$

$$X_A^P = (\omega_P)^{\frac{1}{2}} \chi_A(\vec{r}_P)$$

$$O = \frac{1}{2}\left\| (A \mid B) - \sum_P \sum_Q X_A^P \tilde{Z}^{PQ} X_B^Q \right\|_F^2$$

$$Z^{PQ} \approx \tilde{Z}^{PQ} = \sum_{P'} \sum_{Q'} \left(\sum_A X_A^P X_A^{P'} \right)^{-1} X_A^{P'} (A \mid B) X_B^{Q'} \left(\sum_B X_B^Q X_B^{Q'} \right)^{-1}$$

$$O = \frac{1}{2}\left\| L_{AC} - \sum_P X_A^P Y_C^P \right\|_F^2$$

$$(A \mid B) = \sum_C L_{AC} L_{BC}$$

$$\sum_P X_A^P Y_C^P = L_{AC}$$

$$Z^{PQ} \approx \tilde{Z}^{PQ} = \sum_C Y_C^P Y_C^Q$$

Form $X_A^P = (\omega_P)^{\frac{1}{2}} \chi_A(\vec{r}_P)$

Form $(A|B)$

Compute Cholesky decomposition: $(A|B) = \sum_C L_A^C L_B^C$

Solve $\sum_P X_A^P Y_C^P = L_A^C$

Form $Z^{PQ} = \sum_C Y_C^P Y_C^Q$

Form $X_\mu^P = (\omega_P)^{\frac{1}{4}} \phi_\mu(\vec{r}_P)$

$$\text{Form } A_{\lambda}^{Q} = \sum_{\sigma} D_{\lambda\sigma} X_{\sigma}^{Q}$$

$$\text{Form } B^{Q} = \sum_{\lambda} A_{\lambda}^{Q} X_{\lambda}^{Q}$$

$$\text{Form } C^{P} = \sum_{Q} Z^{PQ} B^{Q}$$

$$\text{Form } E_{\nu}^{P} = X_{\nu}^{P} C^{P}$$

$$\text{Form } J_{\mu\nu} = \sum_{P} X_{\mu}^{P} E_{\nu}^{P}$$

$$\text{Form } A_{\sigma}^{Q} = \sum_{\lambda} X_{\lambda}^{Q} D_{\lambda\sigma}$$

$$\text{Form } B^{PQ} = \sum_{\sigma} X_{\sigma}^{P} A_{\sigma}^{Q}$$

$$\text{Form } C^{PQ} = Z^{PQ} B^{PQ}$$

$$\text{Form } E_{\nu}^{P} = \sum_{Q} C^{PQ} X_{\nu}^{Q}$$

$$\text{Form } K_{\mu\nu} = -\frac{1}{2} \sum_{P} X_{\mu}^{P} E_{\nu}^{P}$$

$$\mathcal{H}(x) = \sum_{s} \bar{\psi}_{s}(x) \mathcal{K}_{s} \psi_{s}(x) + \mathcal{V}(x)$$

$$\mathcal{K}_{\mathrm{s}} = -\frac{\boldsymbol{\nabla}^2}{2m_{\mathrm{s}}} - \mu_{\mathrm{s}}$$

$$\mathcal{V}(x) = -g\bar{\psi}_{\uparrow}(x)\bar{\psi}_{\downarrow}(x)\psi_{\downarrow}(x)\psi_{\uparrow}(x)$$

$$\mathcal{S}[\bar{\psi},\psi] = \int \mathrm{d}x \left[\sum_{\mathrm{s}} \bar{\psi}_{\mathrm{s}}(x)\partial_{\tau}\psi_{\mathrm{s}}(x) + \mathcal{H}(x)\right]$$

$$\int \mathrm{d}x = \int_0^{\beta} \mathrm{d}\tau \int \mathrm{d}\mathbf{x}$$

$$\mathcal{V}(x) = \mathcal{V}_{\mathrm{H}}(x) + \mathcal{V}_{\mathrm{F}}(x) + \mathcal{V}_{\mathrm{B}}(x)$$

$$\begin{aligned}
\mathcal{V}_{\mathrm{H}}(x) &= -g_{\mathrm{H}}\bar{\psi}_{\uparrow}(x)\psi_{\uparrow}(x)\bar{\psi}_{\downarrow}(x)\psi_{\downarrow}(x),\\
\mathcal{V}_{\mathrm{F}}(x) &= +g_{\mathrm{F}}\bar{\psi}_{\uparrow}(x)\psi_{\downarrow}(x)\bar{\psi}_{\downarrow}(x)\psi_{\uparrow}(x),\\
\mathcal{V}_{\mathrm{B}}(x) &= -g_{\mathrm{B}}\bar{\psi}_{\uparrow}(x)\bar{\psi}_{\downarrow}(x)\psi_{\downarrow}(x)\psi_{\uparrow}(x).
\end{aligned}$$

$$\mathcal{S}[\bar{\psi},\psi] = \mathcal{S}_{\mathrm{kin}}[\bar{\psi},\psi] + \mathcal{S}_{\mathrm{H}}[\bar{\psi},\psi] + \mathcal{S}_{\mathrm{F}}[\bar{\psi},\psi] + \mathcal{S}_{\mathrm{B}}[\bar{\psi},\psi]$$

$$\mathcal{S}_{\mathrm{kin}}[\bar{\psi},\psi] = \int \mathrm{d}x \sum_{\mathrm{s}} \bar{\psi}_{\mathrm{s}}(x)(\partial_{\tau} + \mathcal{K}_{\mathrm{s}})\psi_{\mathrm{s}}(x)$$

$$\mathcal{S}_{\mathrm{J}}[\bar{\psi},\psi] = \int \mathrm{d}x\mathcal{V}_{\mathrm{J}}(x)$$

$$\mathcal{Z} = \oint \mathcal{D}\bar{\psi}\mathcal{D}\psi \exp\left(-\mathcal{S}[\bar{\psi},\psi]\right)$$

$$\Omega(V,T,\mu) = -T\ln \mathcal{Z}$$

$$\mathcal{V}_{\mathrm{H}}(x) = -g_{\mathrm{H},\uparrow\downarrow}\rho_{\uparrow}(x)\rho_{\downarrow}(x) - g_{\mathrm{H},\downarrow\uparrow}\rho_{\downarrow}(x)\rho_{\uparrow}(x)$$

$$g_{\mathrm{H}} = g_{\mathrm{H},\uparrow\downarrow} + g_{\mathrm{H}\downarrow\uparrow}$$

$$\rho_{\mathrm{s}}(x) = \bar{\psi}_{\mathrm{s}}(x)\psi_{\mathrm{s}}(x)$$

$$\Delta_{\mathrm{H}}^{\mathrm{T}}(x) = \left(\Delta_{\mathrm{H},\downarrow}(x)\Delta_{\mathrm{H},\uparrow}(x)\right)$$

$$\boldsymbol{j}_{\mathrm{H}}(x) = \begin{pmatrix}\rho_{\uparrow}(x)\\ \rho_{\downarrow}(x)\end{pmatrix}$$

$$e^{-\mathcal{S}_{\mathrm{H}}[\bar{\psi},\psi]} = \mathcal{N}_{\mathrm{H}}\oint \mathcal{D}\boldsymbol{\Delta}_{\mathrm{H}} e^{-\mathcal{S}_{\mathrm{aux}}^{\mathrm{H}}[\boldsymbol{\Delta}_{\mathrm{H}};\bar{\psi},\psi]}$$

$$\begin{aligned}
\mathcal{S}_{\mathrm{aux}}^{\mathrm{H}}[\boldsymbol{\Delta}_{\mathrm{H}};\bar{\psi},\psi] = \int \mathrm{d}x \Big[&\frac{1}{2}\boldsymbol{\Delta}_{\mathrm{H}}^{\mathrm{T}}(x)\mathcal{M}_{\mathrm{H}}\boldsymbol{\Delta}_{\mathrm{H}}(x)\\
&+\boldsymbol{\Delta}_{\mathrm{H}}^{\mathrm{T}}(x)\boldsymbol{j}_{\mathrm{H}}(x)\Big]
\end{aligned}$$

$$\mathcal{M}_{\mathrm{H}} = \frac{1}{2}\begin{pmatrix}0 & 1/g_{\mathrm{H},\uparrow\downarrow}\\ 1/g_{\mathrm{H},\downarrow\uparrow} & 0\end{pmatrix}$$

$$\mathcal{S}_{\mathrm{aux}}^{\mathrm{H}}[\Delta_{\mathrm{H}};\bar{\psi},\psi]=\int\ \mathrm{d}x\left\{\frac{\Delta_{\mathrm{H},\downarrow}(x)\Delta_{\mathrm{H},\uparrow}(x)}{4g_{\mathrm{H},\uparrow\downarrow}}+\frac{\Delta_{\mathrm{H},\uparrow}(x)\Delta_{\mathrm{H},\downarrow}(x)}{4g_{\mathrm{H},\downarrow\uparrow}}+\Delta_{\mathrm{H},\uparrow}(x)\bar{\psi}_{\downarrow}(x)\psi_{\downarrow}(x)+\Delta_{\mathrm{H},\downarrow}(x)\bar{\psi}_{\uparrow}(x)\psi_{\uparrow}(x)\right\}.$$

$$e^{-\mathcal{S}_{\mathrm{B}}[\bar{\psi},\psi]}=\mathcal{N}_{\mathrm{B}}\oint\ \mathcal{D}\bar{\Delta}_{\mathrm{B}}\mathcal{D}\Delta_{\mathrm{B}}e^{-\mathcal{S}_{\mathrm{aux}}^{\mathrm{B}}[\bar{\Delta}_{\mathrm{B}},\Delta_{\mathrm{B}},\bar{\psi},\psi]}$$

$$\mathcal{S}_{\mathrm{aux}}^{\mathrm{B}}[\bar{\Delta}_{\mathrm{B}},\Delta_{\mathrm{B}},\bar{\psi},\psi]=\int\ \mathrm{d}x[\bar{\Delta}_{\mathrm{B}}(x)\mathcal{M}_{\mathrm{B}}\Delta_{\mathrm{B}}(x)$$
$$+\bar{j}_{\mathrm{B}}(x)\Delta_{\mathrm{B}}(x)+j_{\mathrm{B}}(x)\bar{\Delta}_{\mathrm{B}}(x)]$$

$$j_{\mathrm{B}}(x)=\psi_{\downarrow}(x)\psi_{\uparrow}(x)$$

$$\mathcal{Z}_{\mathrm{H}}[\bar{\psi},\psi]=e^{-\mathcal{S}_{\mathrm{H}}[\bar{\psi},\psi]}$$

$$\mathcal{Z}_{\mathrm{B}}[\bar{\psi},\psi]=e^{-\mathcal{S}_{\mathrm{B}}[\bar{\psi},\psi]}$$

$$\mathcal{Z}=\oint\ \mathcal{D}\bar{\psi}\mathcal{D}\psi\exp\left(-\mathcal{S}_{\mathrm{kin}}[\bar{\psi},\psi]\right)\mathcal{Z}_{\mathrm{HB}}[\bar{\psi},\psi]$$

$$\mathcal{Z}_{\mathrm{HB}}[\bar{\psi},\psi]=\mathcal{Z}_{\mathrm{H}}[\bar{\psi},\psi]\mathcal{Z}_{\mathrm{B}}[\bar{\psi},\psi].$$

$$\mathcal{Z}=\oint\mathcal{D}\bar{\psi}\mathcal{D}\psi\oint\ \mathcal{D}\{\Delta\}\exp\left(-\mathcal{S}_{\mathrm{HB}}[\bar{\psi},\psi;\{\Delta\}]\right)$$

$$\mathcal{D}\Delta_{\mathrm{H,s}}\mathcal{D}\bar{\Delta}_{\mathrm{B}}\mathcal{D}\Delta_{\mathrm{B}}$$

$$\mathcal{S}_{\mathrm{HB}}[\bar{\psi},\psi;\{\Delta\}]=\mathcal{S}_{\mathrm{kin}}[\bar{\psi},\psi]+\mathcal{S}_{\mathrm{aux}}^{\mathrm{H}}\left[\Delta_{\mathrm{H,\,s}};\bar{\psi},\psi\right]$$
$$+\mathcal{S}_{\mathrm{aux}}^{\mathrm{B}}[\bar{\Delta}_{\mathrm{B}},\Delta_{\mathrm{B}};\bar{\psi},\psi]$$

$$\mathcal{S}_{\mathrm{HB}}[\bar{\psi},\psi;\{\Delta\}]=\int\ \mathrm{d}x\left\{\sum_{\mathrm{s}}\ \bar{\psi}_{\mathrm{s}}(x)(\partial_{\tau}+\mathcal{K}_{s})\psi_{\mathrm{s}}(x)+\Delta_{\mathrm{H},\uparrow}(x)\bar{\psi}_{\downarrow}(x)\psi_{\downarrow}(x)+\Delta_{\mathrm{H},\downarrow}(x)\bar{\psi}_{\uparrow}(x)\psi_{\uparrow}(x)\right.$$
$$\left.+\bar{\Delta}_{\mathrm{B}}(x)\psi_{\downarrow}(x)\psi_{\uparrow}(x)+\Delta_{\mathrm{B}}(x)\bar{\psi}_{\uparrow}(x)\bar{\psi}_{\downarrow}(x)+\frac{\bar{\Delta}_{\mathrm{B}}(x)\Delta_{\mathrm{B}}(x)}{g_{\mathrm{B}}}+\frac{\Delta_{\mathrm{H},\downarrow}(x)\Delta_{\mathrm{H},\uparrow}(x)}{4g_{\mathrm{H},\uparrow\downarrow}}+\frac{\Delta_{\mathrm{H},\uparrow}(x)\Delta_{\mathrm{H},\downarrow}(x)}{4g_{\mathrm{H},\downarrow\uparrow}}\right\}$$

$$\mu_{\uparrow}=\mu_{\downarrow}=\mu$$

$$m_{\uparrow}=m_{\downarrow}=m$$

$$\mathcal{K}_{\uparrow}=\mathcal{K}_{\downarrow}=\mathcal{K}=-\nabla^{2}/(2m)-\mu$$

$$\Delta_{\mathrm{H},\uparrow}=\Delta_{\mathrm{H},\downarrow}=\Delta_{\mathrm{H}}$$

$$g_{\mathrm{H},\uparrow\downarrow}=g_{\mathrm{H},\downarrow\uparrow}=g_{\mathrm{H}}/2$$

$$\mathcal{S}_{\mathrm{HB}}[\bar{\psi},\psi;\{\Delta\}]=\int\ \mathrm{d}x\left\{\sum_{\mathrm{s}}\ \bar{\psi}_{\mathrm{s}}(x)(\partial_{\tau}+\mathcal{K})\psi_{\mathrm{s}}(x)+\bar{\Delta}_{\mathrm{B}}(x)\psi_{\downarrow}(x)\psi_{\uparrow}(x)+\Delta_{\mathrm{B}}(x)\bar{\psi}_{\uparrow}(x)\bar{\psi}_{\downarrow}(x)\right.$$
$$\left.+\Delta_{\mathrm{H}}(x)[\bar{\psi}_{\downarrow}(x)\psi_{\downarrow}(x)+\bar{\psi}_{\uparrow}(x)\psi_{\uparrow}(x)]+\frac{\bar{\Delta}_{\mathrm{B}}(x)\Delta_{\mathrm{B}}(x)}{g_{\mathrm{B}}}+\frac{\Delta_{\mathrm{H}}(x)\Delta_{\mathrm{H}}(x)}{g_{\mathrm{H}}}\right\}$$

$$\bar{\Psi}(x)=(\bar{\psi}_{\uparrow}(x)\ \psi_{\downarrow}(x))$$

$$\mathcal{S}_{\mathrm{HB}}[\bar{\Psi},\Psi,\{\Delta\}] = \int \mathrm{d}x[\bar{\Psi}(x)\mathbf{A}\Psi(x) + \frac{\bar{\Delta}_{\mathrm{B}}(x)\Delta_{\mathrm{B}}(x)}{g_{\mathrm{B}}} + \frac{\Delta_{\mathrm{H}}(x)\Delta_{\mathrm{H}}(x)}{g_{\mathrm{H}}}],$$

$$\mathbf{A} = \begin{pmatrix} \partial_\tau + \mathcal{K} + \Delta_{\mathrm{H}}(x) & \Delta_{\mathrm{B}}(x) \\ \bar{\Delta}_{\mathrm{B}}(x) & \partial_\tau - \mathcal{K} - \Delta_{\mathrm{H}}(x) \end{pmatrix}$$

$$\mathcal{S}_{\mathrm{eff}}(\{\Delta\}) = -\ln\left[\mathrm{Det}(\beta\mathbf{A})\right] + \int \frac{\mathrm{d}x}{\beta V}\left[\beta V \frac{|\Delta_{\mathrm{B}}(x)|^2}{g_{\mathrm{B}}} + \beta V \frac{\Delta_{\mathrm{H}}(x)^2}{g_{\mathrm{H}}}\right]$$

$$\mathcal{Z} = \oint \mathcal{D}\{\Delta\}\exp\left(-\mathcal{S}_{\mathrm{eff}}[\{\Delta\}]\right)$$

$$\mathcal{Z}_0 = \exp\left(-\mathcal{S}_0[\{\Delta_0\}]\right)$$

$$\mathcal{S}_0[\{\Delta_0\}] = -\int \frac{\mathrm{d}x}{\beta V}\ln\left[\det(\beta\mathbf{A}_0)\right] + \beta V\left(\frac{|\Delta_{\mathrm{B},0}|^2}{g_{\mathrm{B}}} + \frac{\Delta_{\mathrm{H},0}^2}{g_{\mathrm{H}}}\right).$$

$$\mathbf{A}_0 = \begin{pmatrix} \partial_\tau + \mathcal{K} + \Delta_{\mathrm{H},0} & \Delta_{\mathrm{B},0} \\ \bar{\Delta}_{\mathrm{B},0} & \partial_\tau - \mathcal{K} - \Delta_{\mathrm{H},0} \end{pmatrix}$$

$$\mathcal{S}_0[\{\Delta_0\}] = -\sum_k \ln\left[\det\left(\beta\tilde{\mathbf{A}}_{0,k}\right)\right] + \beta V\left(\frac{|\Delta_{\mathrm{B},0}|^2}{g_B} + \frac{\Delta_{\mathrm{H},0}^2}{g_H}\right).$$

$$\partial_\tau \to -ik_n, -i\boldsymbol{\nabla} \to \mathbf{k}$$

$$\mathcal{K} \to \mathbf{k}^2/2m - \mu$$

$$\tilde{\mathbf{A}}_{0,k} = -ik_n\mathbf{I} + \left(\xi_{\mathbf{k}} + \Delta_{\mathrm{H},0}\right)\boldsymbol{\sigma}_z + \Delta_{\mathrm{B},0}\boldsymbol{\sigma}^+ + \bar{\Delta}_{\mathrm{B},0}\boldsymbol{\sigma}^-$$

$$\xi_{\mathbf{k}} = \mathbf{k}^2/(2m) - \mu$$

$$\boldsymbol{\sigma}^\pm = \left(\boldsymbol{\sigma}_x \pm i\boldsymbol{\sigma}_y\right)/2$$

$$\det\left(\beta\tilde{\mathbf{A}}_{0,k}\right) = \beta^2(ik_n - E_{\mathbf{k}})(ik_n + E_{\mathbf{k}})$$

$$E_{\mathbf{k}} = \sqrt{\left(\xi_{\mathbf{k}} + \Delta_{\mathrm{H},0}\right)^2 + |\Delta_{\mathrm{B},0}|^2}$$

$$\Delta_{\mathrm{H},0} = -\frac{g_{\mathrm{H}}}{2\beta V}\sum_k \left[c_{\mathrm{H},+}(k) - c_{\mathrm{H},-}(k)\right]$$

$$\Delta_{\mathrm{B},0} = -\frac{g_{\mathrm{B}}}{\beta V}\sum_k c_{\mathrm{B}}(k)$$

$$c_{\mathrm{H},\pm}(k) = -\frac{ik_n \pm (\xi_{\mathbf{k}} + \Delta_{\mathrm{H},0})}{(ik_n)^2 - E_{\mathbf{k}}^2} e^{ik_n 0^{\pm}}$$

$$c_{\mathrm{B}}(k) = \frac{\Delta_{\mathrm{B},0}}{(ik_n)^2 - E_{\mathbf{k}}^2}$$

$$h_0 = \frac{|\Delta_{\mathrm{H},0}|}{|\Delta_{\mathrm{B},0}| + |\Delta_{\mathrm{H},0}|}$$

$$b_0 = \frac{|\Delta_{\mathrm{B},0}|}{|\Delta_{\mathrm{B},0}| + |\Delta_{\mathrm{H},0}|}$$

$$\Delta_{\mathrm{H},0} = -\frac{g_{\mathrm{H},0}}{2V} \sum_{\mathbf{k}} \left[1 - \frac{\tilde{\xi}_{\mathbf{k}}}{E_{\mathbf{k}}} \tanh\left(\frac{\beta E_{\mathbf{k}}}{2}\right)\right]$$

$$\Delta_{\mathrm{B},0} = g_{\mathrm{B},0} \Delta_{\mathrm{B},0} \frac{1}{V} \sum_{\mathbf{k}} \frac{\tanh\left(\frac{\beta E_{\mathbf{k}}}{2}\right)}{2E_{\mathbf{k}}}$$

$$\frac{\Omega_0}{V} = \frac{|\Delta_{\mathrm{B},0}|^2}{g_{\mathrm{B},0}} + \frac{\Delta_{\mathrm{H},0}^2}{g_{\mathrm{H},0}} - \frac{1}{V} \sum_{\mathbf{k}} \left(E_{\mathbf{k}} - \tilde{\xi}_{\mathbf{k}}\right) - \frac{1}{V} \sum_{\mathbf{k}} \frac{2}{\beta} \ln\left(1 + e^{-\beta E_{\mathbf{k}}}\right)$$

$$N = -\partial\Omega/\partial\mu|_{T,V}$$

$$N_0 = -\partial\Omega_0/\partial\mu|_{T,V}$$

$$n_0 = \frac{1}{V} \sum_{\mathbf{k}} \left[1 - \frac{\tilde{\xi}_{\mathbf{k}}}{E_{\mathbf{k}}} \tanh\left(\frac{\beta}{2} E_{\mathbf{k}}\right)\right]$$

$$\Delta_{\mathrm{H},0} = -\frac{g_{\mathrm{H},0} n_0}{2}$$

$$\Delta_{\mathrm{H},0} = -\frac{|\Delta_{\mathrm{H},0}|}{|\Delta_{\mathrm{H},0}| + |\Delta_{\mathrm{B},0}|} \frac{g n_0}{2}$$

$$\Delta_{\mathrm{H},0} = -|\Delta_{\mathrm{H},0}|$$

$$\Delta_{\mathrm{H},0} = -\frac{g n_0}{2} + |\Delta_{\mathrm{B},0}| \leq 0$$

$$|\Delta_{\mathrm{B},0}| \geq g n_0/2, \Delta_{\mathrm{H},0}$$

$$g \geq 2|\Delta_{\mathrm{B},0}|/n_0$$

$$\Delta_{\mathrm{H},0} = \min\left(0; -\frac{g n_0}{2} + |\Delta_{\mathrm{B},0}|\right)$$

$$\sum_{\mathbf{k}} \to V \int \mathrm{d}^3\mathbf{k}/(2\pi)^3$$

$$\Delta_{\mathrm{B},0}\left[\frac{1}{g_{\mathrm{B},0}}-\int\frac{\mathrm{d}^3k}{(2\pi)^3}\frac{\tanh\left(\frac{\beta E_{\mathbf{k}}}{2}\right)}{2E_{\mathbf{k}}}\right]=0$$

$$\frac{1}{g_{\mathrm{B},0}}-\int\frac{\mathrm{d}^3k}{(2\pi)^3}\frac{\tanh\left(\frac{\beta E_{\mathbf{k}}}{2}\right)}{2E_{\mathbf{k}}}=0$$

$$q\cot\,\delta(\mathbf{q})=\frac{4\pi}{mg}-\frac{2k_{\mathrm{c}}}{\pi}+\frac{2}{\pi k_{\mathrm{c}}}q^2+\mathcal{O}(q^4)$$

$$q\cot\,\delta(\mathbf{q})=-\frac{1}{a_{\mathrm{s}}}+\frac{r_{\mathrm{e}}}{2}q^2+\mathcal{O}(q^4)$$

$$\frac{1}{g(k_{\mathrm{c}})}=-\frac{m}{4\pi a_{\mathrm{s}}}+\frac{m}{2\pi^2}k_{\mathrm{c}}$$

$$k_{\mathrm{c}}(r_{\mathrm{e}})=\frac{4}{\pi r_{\mathrm{e}}}.$$

$$g_*(r_{\mathrm{e}})=\pi^3 r_{\mathrm{e}}/(2m)$$

$$a_{\mathrm{s}}=\frac{\pi^2}{8}r_{\mathrm{e}}\frac{g/g_*(r_{\mathrm{e}})}{g/g_*(r_{\mathrm{e}})-1}$$

$$\frac{k_{\mathrm{F}}a_{\mathrm{s}}}{k_{\mathrm{F}}r_{\mathrm{e}}}=\frac{\pi^2}{8}\frac{g/g_*(r_{\mathrm{e}})}{g/g_*(r_{\mathrm{e}})-1}$$

$$\frac{1}{g_{\mathrm{B},0}(k_{\mathrm{c,\,B}})}=-\frac{m}{4\pi a_{\mathrm{s}}}+\frac{m}{2\pi^2}k_{\mathrm{c,\,B}}$$

$$k_{\mathrm{c,\,B}}=\frac{4}{\pi r_{\mathrm{e,\,B}}}$$

$$k_{\mathrm{c,\,B}}=\frac{k_{\mathrm{c}}}{b_0}-\frac{\pi}{2a_{\mathrm{s}}}\frac{h_0}{b_0}$$

$$\frac{k_{\mathrm{c,\,B}}}{k_{\mathrm{c}}}=\frac{1}{b_0}\left(1-\frac{\pi h_0}{2k_{\mathrm{c}}a_{\mathrm{s}}}\right)=\frac{1}{b_0}\left(1-h_0\frac{\pi^2}{8}\frac{k_{\mathrm{F}}r_{\mathrm{e}}}{k_{\mathrm{F}}a_{\mathrm{s}}}\right)$$

$$\frac{r_{\mathrm{e,\,B}}}{r_{\mathrm{e}}}=\frac{b_0}{1-h_0\frac{\pi^2}{8}\frac{k_{\mathrm{F}}r_{\mathrm{e}}}{k_{\mathrm{F}}a_{\mathrm{s}}}}$$

$$\frac{\left|\Delta_{\mathrm{B},0}\right|^2}{g_{\mathrm{B},0}}+\frac{\Delta_{\mathrm{H},0}^2}{g_{\mathrm{H},0}}=\frac{\left|\Delta_{\mathrm{B},0}\right|^2}{g}+\frac{\Delta_{\mathrm{H},0}^2}{g}+\frac{2}{g}\left|\Delta_{\mathrm{B},0}\right|\left|\Delta_{\mathrm{H},0}\right|$$

$$\Delta_{\mathrm{H},0} = \min\left(0; \frac{n_0}{2}\left[\frac{m}{4\pi a_{\mathrm{s}}} - \frac{2m}{\pi^3 r_{\mathrm{e}}}\right]^{-1} + \left|\Delta_{\mathrm{B},0}\right|\right)$$

$$\Delta_{\mathrm{B},0}\left\{\frac{m}{4\pi a_{\mathrm{s}}} - \int_I \frac{\mathrm{d}^3 k}{(2\pi)^3}\left[\frac{m}{\mathbf{k}^2} - \frac{\tanh\left(\frac{\beta}{2}E_{\mathbf{k}}\right)}{2E_{\mathbf{k}}}\right]\right\} = 0$$

$$(k_{\mathrm{F}} r_{\mathrm{e}})_{\mathrm{c}} = \frac{8}{\pi^2}\left[\frac{1}{k_{\mathrm{F}} a_{\mathrm{s}}} + \frac{4\varepsilon_{\mathrm{F}}}{3\pi\left|\Delta_{\mathrm{B},0}\right|}\right]^{-1},$$

$$\frac{k_{\mathrm{c,\,B}}}{k_{\mathrm{F}}} = \frac{2}{3}\frac{\varepsilon_{\mathrm{F}}}{\left|\Delta_{\mathrm{B},0}\right|} - \frac{\pi}{2|k_{\mathrm{F}} a_{\mathrm{s}}|},$$

$$\frac{\left|\Delta_{\mathrm{B},0}\right|}{\varepsilon_{\mathrm{F}}} = \frac{8}{e^2}\left(1 - \frac{12}{e^2} e^{-\frac{\pi}{2|k_{\mathrm{F}} a_{\mathrm{S}}|}}\right)\exp\left(-\frac{\pi}{2|k_{\mathrm{F}} a_{\mathrm{S}}|}\right),$$

$$\begin{aligned}\frac{\Delta_{\mathrm{H},0}}{\varepsilon_{\mathrm{F}}} =& -\frac{\pi}{6} k_{\mathrm{F}} r_{\mathrm{e}}\left[1 - \frac{\pi^2}{8}\left(\frac{k_{\mathrm{F}} r_{\mathrm{e}}}{|k_{\mathrm{F}} a_{\mathrm{s}}|}\right) + \mathcal{O}\left(\frac{k_{\mathrm{F}} r_{\mathrm{e}}}{|k_{\mathrm{F}} a_{\mathrm{s}}|}\right)^2\right] \\ &+ \frac{8}{e^2}\left(1 - \frac{12}{e^2} e^{-\frac{\pi}{2|k_{\mathrm{F}} a_{\mathrm{s}}|}}\right)\exp\left(-\frac{\pi}{2|k_{\mathrm{F}} a_{\mathrm{s}}|}\right)\end{aligned}$$

$$\begin{aligned}\frac{\Delta_{\mathrm{H},0}}{\varepsilon_{\mathrm{F}}} =& -\frac{4}{3\pi}|k_{\mathrm{F}} a_{\mathrm{s}}|\left[1 - \frac{8}{\pi^2}\frac{|k_{\mathrm{F}} a_{\mathrm{s}}|}{k_{\mathrm{F}} r_{\mathrm{e}}} + \mathcal{O}\left(\frac{|k_{\mathrm{F}} a_{\mathrm{s}}|}{k_{\mathrm{F}} r_{\mathrm{e}}}\right)^2\right] \\ &+ \frac{8}{e^2}\left(1 - \frac{12}{e^2} e^{-\frac{\pi}{2|k_{\mathrm{F}} a_{\mathrm{s}}}}\right)\exp\left(-\frac{\pi}{2|k_{\mathrm{F}} a_{\mathrm{s}}|}\right)\end{aligned}$$

$$\frac{\mu}{\varepsilon_{\mathrm{F}}} = 1 - \frac{\pi}{6} k_{\mathrm{F}} r_{\mathrm{e}}\left[1 - \frac{\pi^2}{8}\frac{k_{\mathrm{F}} r_{\mathrm{e}}}{|k_{\mathrm{F}} a_{\mathrm{s}}|} + \mathcal{O}\left(\frac{k_{\mathrm{F}} r_{\mathrm{e}}}{|k_{\mathrm{F}} a_{\mathrm{s}}|}\right)^2\right]$$

$$\frac{\mu}{\varepsilon_{\mathrm{F}}} = 1 - \frac{4|k_{\mathrm{F}} a_{\mathrm{s}}|}{3\pi}\left[1 - \frac{8}{\pi^2}\frac{|k_{\mathrm{F}} a_{\mathrm{s}}|}{k_{\mathrm{F}} r_{\mathrm{e}}} + \mathcal{O}\left(\frac{|k_{\mathrm{F}} a_{\mathrm{s}}|}{k_{\mathrm{F}} r_{\mathrm{e}}}\right)^2\right]$$

$$\begin{aligned}\frac{\mathcal{E}}{\varepsilon_{\mathrm{F}} N} =& -\frac{3\pi}{8}\left[\frac{\left|\Delta_{\mathrm{B},0}\right|^2}{\varepsilon_{\mathrm{F}}^2 k_{\mathrm{F}} a_{\mathrm{s}}} - \frac{\Delta_{\mathrm{H},0}^2}{\varepsilon_{\mathrm{F}}^2}\left(\frac{1}{k_{\mathrm{F}} a_{\mathrm{s}}} - \frac{8}{\pi^2}\frac{1}{k_{\mathrm{F}} r_{\mathrm{e}}}\right)\right] \\ &+ \frac{\mu(n) - \Delta_{\mathrm{H},0}}{\varepsilon_{\mathrm{F}}} - \frac{3}{4\varepsilon_{\mathrm{F}}^{5/2}}\int_0^\infty \mathrm{d}\epsilon\sqrt{\epsilon}(E - \tilde{\xi})\end{aligned}$$

$$\tilde{\xi} = \epsilon - \mu(n) + \Delta_{\mathrm{H},0}$$

$$E = \sqrt{(\tilde{\xi})^2 + \left|\Delta_{\mathrm{B},0}\right|^2}$$

$$\frac{\mathcal{E}}{\varepsilon_{\mathrm{F}}N}=\frac{3}{5}-\frac{3\pi}{8}\left(\frac{1}{|k_{\mathrm{F}}a_{\mathrm{s}}|}+\frac{8}{\pi^2}\frac{1}{k_{\mathrm{F}}r_{\mathrm{e}}}\right)\frac{|\Delta_{\mathrm{H},0}|^2}{\varepsilon_{\mathrm{F}}^2}$$
$$-\frac{3}{8}\left(1-\frac{\pi}{2}k_{\mathrm{F}}r_{\mathrm{e,\,B}}\right)\frac{|\Delta_{\mathrm{B},0}|^2}{\varepsilon_{\mathrm{F}}^2}$$

$$\frac{\mathcal{E}}{\varepsilon_{\mathrm{F}}N}=\left[\frac{3}{5}-\frac{\pi}{12}\left(1-\frac{\pi^2}{8}\frac{k_{\mathrm{F}}r_{\mathrm{e}}}{|k_{\mathrm{F}}a_{\mathrm{s}}|}\right)k_{\mathrm{F}}r_{\mathrm{e}}\right]+\mathcal{O}\left(\frac{k_{\mathrm{F}}r_{\mathrm{e}}}{|k_{\mathrm{F}}a_{\mathrm{s}}|}\right)^2$$
$$-\frac{24}{e^4}\left\{1-\frac{12}{e^2}[f(k_{\mathrm{F}}a_{\mathrm{s}})]^{1/2}\right\}^3 f(k_{\mathrm{F}}a_{\mathrm{s}})$$

$$f(k_{\mathrm{F}}a_{\mathrm{s}})=\exp\left(-\frac{\pi}{|k_{\mathrm{F}}a_{\mathrm{s}}|}\right)$$

$$\frac{\mathcal{E}}{\varepsilon_{\mathrm{F}}N}=\left[\frac{3}{5}-\frac{2}{3\pi}\left(1-\frac{6}{\pi}\frac{|k_{\mathrm{F}}a_{\mathrm{s}}|}{k_{\mathrm{F}}r_{\mathrm{e}}}\right)|k_{\mathrm{F}}a_{\mathrm{s}}|\right]+\mathcal{O}\left(\frac{|k_{\mathrm{F}}a_{\mathrm{s}}|}{k_{\mathrm{F}}r_{\mathrm{e}}}\right)^2$$
$$-\frac{24}{e^4}\left\{1-\frac{12}{e^2}[f(k_{\mathrm{F}}a_{\mathrm{s}})]^{1/2}\right\}^3 f(k_{\mathrm{F}}a_{\mathrm{s}})$$

$$\frac{k_{\mathrm{c,\,B}}}{k_{\mathrm{F}}}=\frac{4}{\pi k_{\mathrm{F}}r_{\mathrm{e}}}$$

$$\frac{|\Delta_{\mathrm{B},0}|}{\varepsilon_{\mathrm{F}}}=\frac{8}{e^2}\exp\left(-\frac{\pi}{4}k_{\mathrm{F}}r_{\mathrm{e}}\right)\exp\left(-\frac{\pi}{2|k_{\mathrm{F}}a_{\mathrm{s}}|}\right)$$

$$(k_{\mathrm{F}}r_{\mathrm{e}})_{\mathrm{c}}=\frac{48}{\pi e^2}e^{-\frac{\pi}{2|k_{\mathrm{F}}a_{\mathrm{s}}|}}$$

$$\mu=\varepsilon_{\mathrm{F}}-\mathcal{O}\left(|\Delta_{\mathrm{B},0}|^2/\varepsilon_{\mathrm{F}}\right)$$

$$\frac{\mathcal{E}}{\varepsilon_{\mathrm{F}}N}=\frac{3}{5}-\frac{24}{e^4}\left(1-\frac{\pi}{2}k_{\mathrm{F}}r_{\mathrm{e}}\right)\exp\left(-\frac{\pi}{2}k_{\mathrm{F}}r_{\mathrm{e}}\right)f(k_{\mathrm{F}}a_{\mathrm{s}})$$

$$f(k_{\mathrm{F}}a_{\mathrm{s}})=\exp\left(-\frac{\pi}{|k_{\mathrm{F}}a_{\mathrm{s}}|}\right)$$

$$\frac{\Delta_{\mathrm{H},0}}{\varepsilon_{\mathrm{F}}}=\min\left(0;-\frac{\pi}{6}k_{\mathrm{F}}r_{\mathrm{e}}+\frac{|\Delta_{\mathrm{B},0}|}{\varepsilon_{\mathrm{F}}}\right)$$

$$\frac{|\Delta_{\mathrm{B},0}|}{\varepsilon_{\mathrm{F}}}=\frac{4}{\sqrt{3\pi}}\frac{1}{\sqrt{k_{\mathrm{F}}a_{\mathrm{s}}}}\left[1+\frac{1}{4}\frac{k_{\mathrm{F}}r_{\mathrm{e}}}{k_{\mathrm{F}}a_{\mathrm{s}}}+\mathcal{O}\left(\frac{k_{\mathrm{F}}r_{\mathrm{e}}}{k_{\mathrm{F}}a_{\mathrm{s}}}\right)^2\right]$$

$$\frac{E_{\mathrm{b}}}{\varepsilon_{\mathrm{F}}}=\frac{1}{(k_{\mathrm{F}}a_{\mathrm{s}})^2}\left(1+\frac{k_{\mathrm{F}}r_{\mathrm{e}}}{k_{\mathrm{F}}a_{\mathrm{s}}}+\mathcal{O}\left(\frac{k_{\mathrm{F}}r_{\mathrm{e}}}{k_{\mathrm{F}}a_{\mathrm{s}}}\right)^2\right),$$

$$\frac{\mu}{\varepsilon_{\mathrm{F}}}=-\frac{E_b}{2\varepsilon_{\mathrm{F}}}+\frac{2}{3\pi}k_{\mathrm{F}}a_{\mathrm{s}}\left(1+\frac{k_{\mathrm{F}}r_{\mathrm{e}}}{k_{\mathrm{F}}a_{\mathrm{s}}}\right)+\mathcal{O}\left(\frac{k_{\mathrm{F}}r_{\mathrm{e}}}{k_{\mathrm{F}}a_{\mathrm{s}}}\right)^2.$$

$$\xi_{\text{pair}}^2 = \frac{\int d\mathbf{r}\bar{\chi}(\mathbf{r})r^2\chi(\mathbf{r})}{\int d\mathbf{r}\bar{\chi}(\mathbf{r})\chi(\mathbf{r})}$$

$$\xi_{\text{pair}}^2 = -\frac{\int d\mathbf{k}\bar{\Phi}_{\mathbf{k}}\nabla_{\mathbf{k}}^2\Phi_{\mathbf{k}}}{\int d\mathbf{k}\bar{\Phi}_{\mathbf{k}}\Phi_{\mathbf{k}}}$$

$$\left(k_{\text{F}}\xi_{\text{pair}}\right)^2 = \frac{\varepsilon_{\text{F}}}{4\sqrt{2}}\frac{5\left|\Delta_{\text{B},0}\right|^2 + 2\mu_{\text{H},0}\left[\mu_{\text{H},0} + E_{\mathbf{0}}\right]}{\left|\Delta_{\text{B},0}\right|^2 E_{\mathbf{0}}},$$

$$E_{\mathbf{0}} = \sqrt{\mu_{\text{H},0}^2 + \left|\Delta_{\text{B},0}\right|^2}$$

$$k_{\text{F}}\xi_{\text{pair}} = \frac{e^2}{8\sqrt{2}}\left[1 + \frac{12}{e^2}\exp\left(-\frac{\pi}{2|k_{\text{F}}a_{\text{s}}|}\right)\right] \times \exp\left(+\frac{\pi}{2|k_{\text{F}}a_{\text{s}}|}\right)$$

$$k_{\text{F}}\xi_{\text{pair}} = \frac{e^2}{8\sqrt{2}}\exp\left(\frac{\pi}{4}k_{\text{F}}r_{\text{e}}\right)\exp\left(+\frac{\pi}{2|k_{\text{F}}a_{\text{s}}|}\right)$$

$$k_{\text{F}}\xi_{\text{pair}} = \frac{k_{\text{F}}a_{\text{s}}}{\sqrt{2}}\left(1 - \frac{1}{2}\frac{k_{\text{F}}r_{\text{e}}}{k_{\text{F}}a_{\text{s}}}\right)$$

$$\mathcal{S}_{\text{fluct}}\left[\{\Delta_0\};\{\eta\}\right] = \int \mathrm{d}x\left[\frac{|\eta_{\text{B}}(\mathbf{x})|^2}{g_{\text{B}}} + \frac{\eta_{\text{H}}(\mathbf{x})^2}{g_{\text{H}}}\right] + \frac{1}{2}\int \frac{\mathrm{d}x}{\beta V}\mathrm{tr}\{[\mathbf{A}_0^{-1}\delta\mathbf{A}(\mathbf{x})]^2\}$$

$$\delta\mathbf{A}(\mathbf{x}) = \begin{pmatrix}\eta_{\text{H}}(\mathbf{x}) & \eta_{\text{B}}(\mathbf{x}) \\ \bar{\eta}_{\text{B}}(\mathbf{x}) & -\eta_{\text{H}}(\mathbf{x})\end{pmatrix}$$

$$\xi_{\text{Pair}}^2 = -\frac{\langle\Phi_{\mathbf{k}}|\nabla_{\mathbf{k}}^2|\Phi_{\mathbf{k}}\rangle}{\langle\Phi_{\mathbf{k}} \mid \Phi_{\mathbf{k}}\rangle} = -\frac{\sum_{\mathbf{k}}\bar{\Phi}_{\mathbf{k}}\nabla_{\mathbf{k}}^2\Phi_{\mathbf{k}}}{\sum_{\mathbf{k}}|\Phi_{\mathbf{k}}|^2},$$

$$\Phi_{\mathbf{k}} = \frac{\Delta_{\text{B},0}}{2E_{\mathbf{k}}}$$

$$\langle\Phi_{\mathbf{k}}|\nabla_{\mathbf{k}}^2|\Phi_{\mathbf{k}}\rangle = \sum_{\mathbf{k}}\bar{\Phi}_{\mathbf{k}}\nabla_{\mathbf{k}}^2\Phi_{\mathbf{k}}$$

$$\langle\Phi_{\mathbf{k}} \mid \Phi_{\mathbf{k}}\rangle = \sum_{\mathbf{k}}|\Phi_{\mathbf{k}}|^2$$

$$\langle\Phi_{\mathbf{k}} \mid \Phi_{\mathbf{k}}\rangle = \frac{\left|\Delta_{\text{B},0}\right|^2}{4}\int \frac{\mathrm{d}^3k}{\left(\frac{k^2}{2m} - \mu_{\text{H},0}\right)^2 + \left|\Delta_{\text{B},0}\right|^2}$$

$$\langle \Phi_{\mathbf{k}} \mid \Phi_{\mathbf{k}} \rangle = \int_{-\infty}^{\infty} \mathrm{d}u \frac{\left|\Delta_{\mathrm{B},0}\right|^2 \sqrt{2}\pi (m)^{3/2} u^2}{\left(u^2 - \mu_{\mathrm{H},0}\right)^2 + \left|\Delta_{\mathrm{B},0}\right|^2}$$

$$\gamma = |\gamma| e^{i\frac{\theta}{2}}$$

$$|\gamma| = \left(\mu_{\mathrm{H},0}^2 + \left|\Delta_{\mathrm{B},0}\right|^2\right)^{1/4},$$

$$\theta = \arctan\left(\frac{\left|\Delta_{\mathrm{B},0}\right|}{\mu_{\mathrm{H},0}}\right)$$

$$\langle \Phi_{\mathbf{k}} \mid \Phi_{\mathbf{k}} \rangle = \int_{-\infty}^{\infty} \mathrm{d}z \frac{\left|\Delta_{\mathrm{B},0}\right|^2 \sqrt{2}\pi (m)^{3/2} z^2}{(z^2 - \gamma^2)(z^2 - \bar{\gamma}^2)}$$

$$\oint_{\Gamma_R} \mathrm{d}z f(z) = \int_{-R}^{R} \mathrm{d}z f(z) + \int_{C_R} \mathrm{d}z f(z).$$

$$\begin{aligned} \int_{\mathbb{R}} \mathrm{d}z f(z) &= \oint_{\Gamma_\infty} \mathrm{d}z f(z) \\ &= 2i\pi \sum_{z_0 \in \mathcal{P}_+} \mathrm{Res}_{z=z_0} f(z) \end{aligned}$$

$$f(z) = \frac{z^2}{(z^2 - \gamma^2)(z^2 - \bar{\gamma}^2)}$$

$$\langle \Phi_{\mathbf{k}} \mid \Phi_{\mathbf{k}} \rangle = \left|\Delta_{\mathrm{B},0}\right|^2 \pi^2 (2m)^{3/2} i \sum_{z_0 \in \mathcal{P}_+} \mathrm{Res}_{z=z_0} f(z)$$

$$\begin{aligned} \mathrm{Res}_{z=\gamma} f(z) &= \frac{1}{2} \frac{\gamma}{\gamma^2 - \bar{\gamma}^2} \\ \mathrm{Res}_{z=-\bar{\gamma}} f(z) &= -\frac{1}{2} \frac{\bar{\gamma}}{\gamma^2 - \bar{\gamma}^2} \end{aligned}$$

$$\langle \Phi_{\mathbf{k}} \mid \Phi_{\mathbf{k}} \rangle = \left|\Delta_{\mathrm{B},0}\right|^2 \sqrt{2}\pi (m)^{3/2} 2i\pi \frac{1}{4i|\gamma| \sin(\theta/2)}$$

$$\langle \Phi_{\mathbf{k}} \mid \Phi_{\mathbf{k}} \rangle = 2\pi^2 \left(\frac{m}{2}\right)^{3/2} \left|\Delta_{\mathrm{B},0}\right| \sqrt{\mu_{\mathrm{H},0} + |\gamma|^2}$$

$$\begin{aligned} \langle \Phi_{\mathbf{k}} | \nabla_{\mathbf{k}}^2 | \Phi_{\mathbf{k}} \rangle &= \int \mathrm{d}^3 k \bar{\Phi}_{\mathbf{k}} \nabla_{\mathbf{k}}^2 \Phi_{\mathbf{k}} \\ &= -\int \mathrm{d}^3 k |\nabla_{\mathbf{k}} \Phi_{\mathbf{k}}|^2 \end{aligned}$$

$$\langle \Phi_{\mathbf{k}} | \nabla_{\mathbf{k}}^2 | \Phi_{\mathbf{k}} \rangle = -2\sqrt{2m}\pi \left|\Delta_{\mathrm{B},0}\right|^2 \int_{-\infty}^{\infty} du g(u)$$

$$g(u) = \frac{u^4\left(u^2 - \mu_{\mathrm{H},0}\right)^2}{\left[\left(u^2 - \mu_{\mathrm{H},0}\right)^2 + \left|\Delta_{\mathrm{B},0}\right|^2\right]^3}$$

$$\langle \Phi_{\mathbf{k}} | \nabla_{\mathbf{k}}^2 | \Phi_{\mathbf{k}} \rangle = -4i\pi^2\sqrt{2m}\left|\Delta_{\mathrm{B},0}\right|^2 \sum_{z_0 \in \mathcal{P}_+} \mathrm{Res}_{z=z_0} g(z).$$

$$\mathrm{Res}_{z=z_0} g(z) = \frac{1}{(n-1)!} \lim_{z \to z_0} \frac{\mathrm{d}^{n-1}}{dz^{n-1}} [(z - z_0)^n g(z)]$$

$$\sum_{z_0=\gamma,-\bar{\gamma}} \mathrm{Res}_{z=z_0} g(z) = -\frac{|\gamma|^2(\gamma^2 + \bar{\gamma}^2 - 5|\gamma|^2) + 6|\gamma|^2\mu_{\mathrm{H},0} - 3\mu_{\mathrm{H},0}^2}{16|\gamma|^2(\gamma - \bar{\gamma})^5}$$

$$\sum_{z_0=\gamma,-\bar{\gamma}} \mathrm{Res}_{z=z_0} g(z) = \frac{\sqrt{2}\left(\mu_{\mathrm{H},0} + |\gamma|^2\right)^{5/2}}{128i|\gamma|^2\left|\Delta_{\mathrm{B},0}\right|^5}\left(|\gamma|^2 - \mu_{\mathrm{H},0}\right)\left(5|\gamma|^2 - 3\mu_{\mathrm{H},0}\right)$$

$$\langle \Phi_{\mathbf{k}} | \nabla_{\mathbf{k}}^2 | \Phi_{\mathbf{k}} \rangle = -\frac{\pi^2}{16}\sqrt{m}\frac{\left(\mu_{\mathrm{H},0} + |\gamma|^2\right)^{5/2}\left(|\gamma|^2 - \mu_{\mathrm{H},0}\right)\left(5|\gamma|^2 - 3\mu_{\mathrm{H},0}\right)}{|\gamma|^2\left|\Delta_{\mathrm{B},0}\right|^3}$$

$$H := -\sum_{i=1}^{N} \Delta_{x_i} - \sum_{i=1}^{N}\sum_{l=1}^{n} \frac{Z_l}{|x_i - R_l|} + \sum_{1 \le i < j \le N} \frac{1}{|x_i - x_j|},$$

$$\Psi := (N!)^{-1/2} \sum_{\sigma \in S_N} (\mathrm{sgn}\sigma)\varphi_1\left(x_{\sigma(1)}\right) \cdots \varphi_N\left(x_{\sigma(N)}\right)$$

$$\mathcal{W} := \left\{\Phi = {}^t(\varphi_1, \dots, \varphi_N) \in \bigoplus_{i=1}^{N} H^2(\mathbb{R}^3) : \langle \varphi_i, \varphi_j \rangle = \delta_{ij}\right\}$$

$$\Phi = {}^t(\varphi_1, \dots, \varphi_N)$$

$$\bigoplus_{i=1}^{N} H^2(\mathbb{R}^3)$$

$$\textstyle\sum_{i=1}^{N} \langle \varphi_i, (1 - \Delta)^2 \tilde{\varphi}_i \rangle \text{ for } \Phi = {}^t(\varphi_1, \dots, \varphi_N)$$

$$\hat{\mathcal{E}}(\Phi) = \sum_{i=1}^{N} \langle \varphi_i, h\varphi_i \rangle + \frac{1}{2}\iint \rho(x)\frac{1}{|x - y|}\rho(y)dxdy - \frac{1}{2}\iint \frac{1}{|x - y|}|\rho(x, y)|^2 dxdy$$

$$h := -\Delta + V, V(x) := -\sum_{l=1}^{n} \frac{Z_l}{|x - R_l|}$$

$$\rho(x) := \sum_{i=1}^{N} |\varphi_i(x)|^2$$

$$\rho(x,y) := \sum_{i=1}^{N} \varphi_i(x)\varphi_i^*(y),$$

$$\mathcal{F}(\Phi)\varphi_i = \sum_{j=1}^{N} \epsilon_{ij}\varphi_j, 1 \leq i \leq N$$

$$R^{\Phi}(x) := \sum_{i=1}^{N} \int |x-y|^{-1}|\varphi_i(y)|^2 dy = \sum_{i=1}^{N} Q_{ii}^{\Phi}(x)$$

$$Q_{ij}^{\Phi}(x) := \int |x-y|^{-1}\varphi_j^*(y)\varphi_i(y)dy$$

$$S^{\Phi} := \sum_{i=1}^{N} S_{ii}^{\Phi}$$

$$\left(S_{ij}^{\Phi}w\right)(x) := \left(\int |x-y|^{-1}\varphi_j^*(y)w(y)dy\right)\varphi_i(x)$$

$$\Phi^{\text{New}} := {}^t\left(\varphi_1^{\text{New}}, \dots, \varphi_N^{\text{New}}\right) \text{ by } \varphi_i^{\text{New}} = \textstyle\sum_{j=1}^{N} A_{ij}\varphi_j^{\text{Old}}$$

$$\Phi^{\text{Old}} := {}^t\left(\varphi_1^{\text{Old}}, \dots, \varphi_N^{\text{Old}}\right), \Phi^{\text{New}}$$

$$\mathcal{F}(\Phi)\varphi_i = \epsilon_i\varphi_i, 1 \leq i \leq N$$

$$\mathcal{F}(\tilde{\Phi})\varphi_i = \epsilon_i\varphi_i, i = 1 \leq i \leq N$$

$$\mathcal{F}\left(\Phi^k\right)\varphi_i^{k+1} = \epsilon_i^{k+1}\varphi_i^{k+1}, 1 \leq i \leq N$$

$$\Phi^{k+1} := {}^t\left(\varphi_1^{k+1}, \dots, \varphi_N^{k+1}\right)$$

$$(D_{\Phi}w)(x) := \sum_{i=1}^{N} \left(\int \varphi_i^*(y)w(y)dy\right)\varphi_i(x)$$

$$\mathcal{P} := \{D \in \mathcal{T}_2 : \text{Ran}D \subset H^2(\mathbb{R}^3), D^2 = D = D^*, \text{Tr}(D) = N\}$$

$$\|D\|_2 := \left(\text{Tr}(D^*D)\right)^{1/2}$$

$$(G(D)w)(x) := \text{Tr}(|x-y|^{-1}D)w(x) - D(|x-y|^{-1}w(y)),$$

$$\mathcal{G}(\Phi) = G(D_{\Phi}).$$

$$\hat{\mathcal{E}}(\Phi) = \hat{E}(D_{\Phi}),$$

$$\hat{E}(D) := \mathrm{Tr}(hD) + \frac{1}{2}\mathrm{Tr}(G(D)D).$$

$$\Psi = \begin{vmatrix} \varphi_1(x_1) & \cdots & \varphi_1(x_N) \\ \vdots & \ddots & \vdots \\ \varphi_N(x_1) & \cdots & \varphi_N(x_N) \end{vmatrix},$$

$$E(D, \tilde{D}) := \mathrm{Tr}(hD) + \mathrm{Tr}(h\tilde{D}) + \mathrm{Tr}(G(D)\tilde{D})$$

$$\begin{aligned} \mathcal{E}(\Phi, \tilde{\Phi}) &:= \sum_{i=1}^{N} \langle \varphi_i, h\varphi_i \rangle + \sum_{i=1}^{N} \langle \tilde{\varphi}_i, h\tilde{\varphi}_i \rangle + \sum_{i=1}^{N} \langle \tilde{\varphi}_i, \mathcal{G}(\Phi)\tilde{\varphi}_i \rangle \\ &= \sum_{i=1}^{N} \langle \varphi_i, h\varphi_i \rangle + \sum_{i=1}^{N} \langle \tilde{\varphi}_i, \mathcal{F}(\Phi)\tilde{\varphi}_i \rangle \\ &= \sum_{i=1}^{N} \langle \varphi_i, \mathcal{F}(\tilde{\Phi})\varphi_i \rangle + \sum_{i=1}^{N} \langle \tilde{\varphi}_i, h\tilde{\varphi}_i \rangle \end{aligned}$$

$$\mathcal{E}(\Phi, \tilde{\Phi}) = E(D_\Phi, D_{\tilde{\Phi}})$$

$$\Phi^{k+1} = {}^t\left(\varphi_1^{k+1}, \dots, \varphi_N^{k+1}\right)\mathcal{E}\left(\Phi^k, \Phi\right)\left\{\left(D_{\Phi^{kj}}, D_{\Phi^{kj}+1}\right)\right\}\left\{\left(D_{\Phi^k}, D_{\Phi^{k+1}}\right)\right\}$$

$$|f(x) - f(x_0)|^{1-\theta} \leq \kappa \|\nabla f(x)\|$$

$$-\Delta u = u^2$$

$$\left\{\left(D_{\Phi^k}, D_{\Phi^{k+1}}\right)\right\}\left\{\left(A_{2k}\Phi^{2k}, A_{2k+1}\Phi^{2k+1}\right)\right\}$$

$$\Xi^\infty := \lim_{k\to\infty} A_{2k}\Phi^{2k}$$

$$\left\|\langle x \rangle \varphi_i^0(x)\right\| \leq C_0, 1 \leq i \leq N$$

$$\begin{aligned} \lim_{k\to\infty} \left\|D_{\Phi^{2k}} - D_{\Xi^\infty}\right\|_2 &= 0 \\ \lim_{k\to\infty} \left\|D_{\Phi^{2k+1}} - D_{\tilde{\Xi}^\infty}\right\|_2 &= 0 \end{aligned}$$

$$\begin{aligned} \lim_{k\to\infty} \left\|A_{2k}\Phi^{2k} - \Xi^\infty\right\|_{\oplus_{i=1}^N H^2(\mathbb{R}^3)} &= 0 \\ \lim_{k\to\infty} \left\|A_{2k+1}\Phi^{2k+1} - \tilde{\Xi}^\infty\right\|_{\oplus_{i=1}^N H^2(\mathbb{R}^3)} &= 0 \end{aligned}$$

$$\mathcal{E}\left(\Phi^k, \Phi^{k+1}\right) \leq \mathcal{E}\left(\Phi^k, \Phi^{k-1}\right) = \mathcal{E}\left(\Phi^{k-1}, \Phi^k\right)$$

$$\Phi = {}^t(\varphi_1, \dots, \varphi_N) \in \bigoplus_{i=1}^{N} H^2(\mathbb{R}^3)$$

$$\left\langle w, \left(Q_{ii}^\Phi - S_{ii}^\Phi\right)w \right\rangle = \int |x-y|^{-1}\left|\hat{\Psi}_i\right|^2 dxdy \geq 0$$

$$\hat{\Psi}_i := 2^{-1/2}(w(x)\varphi_i(y) - \varphi_i(x)w(y))$$

$$\mu := \lim_{k\to\infty} \mathcal{E}\left(\Phi^k, \Phi^{k+1}\right) \geq 2\inf\sigma(h)$$

$$\begin{matrix} \mathcal{F}(\tilde{\Phi})\varphi_i = \epsilon_i \varphi_i \\ \mathcal{F}(\Phi)\tilde{\varphi}_i = \tilde{\epsilon}_i \tilde{\varphi}_i \end{matrix} \; 1 \leq i \leq N$$

$$\begin{aligned} & d\left(\left(\Phi^k, \Phi^{k+1}\right), \Gamma_{\gamma,\mu}\right) \\ & := \inf_{(\Phi,\tilde{\Phi})\in\Gamma_{\gamma,\mu}} \left(\left\|\Phi^k - \Phi\right\|_{\oplus_{i=1}^N H^2(\mathbb{R}^3)} + \left\|\Phi^{k+1} - \tilde{\Phi}\right\|_{\oplus_{i=1}^N H^2(\mathbb{R}^3)}\right) \end{aligned}$$

$$\left(\Phi^k, \Phi^{k+1}\right)\Gamma_{\gamma,\mu}\left(\bigoplus_{i=1}^N H^2(\mathbb{R}^3)\right)\bigoplus\left(\bigoplus_{i=1}^N H^2(\mathbb{R}^3)\right)$$

$$\left\|\langle x\rangle \varphi_i^0(x)\right\| \leq C_0, 1 \leq i \leq N,$$

$$\mathcal{E}\left(\Phi^k, \Phi^{k+1}\right) - \mathcal{E}\left(\Phi^{k+1}, \Phi^{k+2}\right) \geq 2^{-1}\gamma\left\|D_{\Phi^{k+2}} - D_{\Phi^k}\right\|_2^2$$

$$\begin{aligned} & \mathcal{E}\left(\Phi^k, \Phi^{k+1}\right) - \mathcal{E}\left(\Phi^{k+1}, \Phi^{k+2}\right) \\ & = \sum_{i=1}^N \left(\left\langle \varphi_i^k, \mathcal{F}\left(\Phi^{k+1}\right)\varphi_i^k\right\rangle - \left\langle \varphi_i^{k+2}, \mathcal{F}\left(\Phi^{k+1}\right)\varphi_i^{k+2}\right\rangle\right) \\ & \geq \sum_{i=1}^N \left\{\left(\epsilon_N^{k+2} + \gamma\right)\left\|\left(1 - E_{k+1}\left(\epsilon_N^{k+2} + \gamma/2\right)\right)\varphi_i^k\right\|^2 \right. \\ & \left. + \left\langle \varphi_i^k, \mathcal{F}\left(\Phi^{k+1}\right)E_{k+1}\left(\epsilon_N^{k+2} + \gamma/2\right)\varphi_i^k\right\rangle - \epsilon_i^{k+2}\right\}, \end{aligned}$$

$$\left\|\left(1 - E_{k+1}\left(\epsilon_N^{k+2} + \gamma/2\right)\right)\varphi_i^k\right\|^2 = 1 - \sum_{j=1}^N \left|\left\langle \varphi_j^{k+2}, \varphi_i^k\right\rangle\right|^2$$

$$\left\langle \varphi_i^k, \mathcal{F}\left(\Phi^{k+1}\right)E_{k+1}\left(\epsilon_N^{k+2} + \gamma/2\right)\varphi_i^k\right\rangle = \sum_{j=1}^N \epsilon_j^{k+2}\left|\left\langle \varphi_j^{k+2}, \varphi_i^k\right\rangle\right|^2$$

$$\begin{aligned} & \left(\epsilon_N^{k+2} + \gamma\right)\sum_{i=1}^N \left\{\left(1 - \sum_{j=1}^N \left|\left\langle \varphi_j^{k+2}, \varphi_i^k\right\rangle\right|^2\right)\right\} - \sum_{i=1}^N \left\{\epsilon_i^{k+2}\left(1 - \sum_{j=1}^N \left|\left\langle \varphi_i^{k+2}, \varphi_j^k\right\rangle\right|^2\right)\right\} \\ & \geq \gamma\left(N - \sum_{i,j=1}^N \left|\left\langle \varphi_j^{k+2}, \varphi_i^k\right\rangle\right|^2\right) \end{aligned}$$

$$\mathcal{E}\left(\Phi^k, \Phi^{k+1}\right) - \mathcal{E}\left(\Phi^{k+1}, \Phi^{k+2}\right) \geq \gamma\left(N - \sum_{i,j=1}^N \left|\left\langle \varphi_j^{k+2}, \varphi_i^k\right\rangle\right|^2\right)$$

$$\begin{aligned}
&\left\|D_{\Phi^{k+2}} - D_{\Phi^k}\right\|_2^2 \\
&= \mathrm{Tr}\left(D^*_{\Phi^{k+2}} D_{\Phi^{k+2}}\right) - \mathrm{Tr}\left(D^*_{\Phi^{k+2}} D_{\Phi^k}\right) - \mathrm{Tr}\left(D^*_{\Phi^k} D_{\Phi^{k+2}}\right) + \mathrm{Tr}\left(D^*_{\Phi^k} D_{\Phi^k}\right) \\
&= 2N - 2\sum_{i,j=1}^{N} \left|\left\langle \varphi_j^{k+2}, \varphi_i^k \right\rangle\right|^2 \\
&\leq 2\gamma^{-1}\left(\mathcal{E}\left(\Phi^k, \Phi^{k+1}\right) - \mathcal{E}\left(\Phi^{k+1}, \Phi^{k+2}\right)\right)
\end{aligned}$$

$$\|D_\Phi - D_{\tilde{\Phi}}\|_2 \geq \|A\Phi - \tilde{A}\tilde{\Phi}\|_{\oplus_{i=1}^N L^2(\mathbb{R}^3)}$$

$$\hat{B}_{ij} = \langle \varphi_i, \tilde{\varphi}_j \rangle$$

$$\begin{aligned}
\|D_\Phi - D_{\tilde{\Phi}}\|_2^2 = \|D_{A\Phi} - D_{\tilde{A}\tilde{\Phi}}\|_2^2 &= 2\left(N - \sum_{i,j=1}^{N} \left|\left\langle \xi_i, \tilde{\xi}_j \right\rangle\right|^2\right) \\
&= 2\left(N - \sum_{i=1}^{N} \lambda_i^2\right) \geq 2\left(N - \sum_{i=1}^{N} \lambda_i\right) \\
&= 2\left(N - \sum_{i=1}^{N} \left\langle \xi_i, \tilde{\xi}_i \right\rangle\right) = \|\Xi - \tilde{\Xi}\|^2_{\oplus_{i=1}^N L^2(\mathbb{R}^3)} \\
&= \|A\Phi - \tilde{A}\tilde{\Phi}\|^2_{\oplus_{i=1}^N L^2(\mathbb{R}^3)}
\end{aligned}$$

$$\sigma_{\text{ess}}\left(\mathcal{F}\left(\Phi^{k-1}\right)\right) = [0, \infty)$$

$$\epsilon_N^k \leq \inf \sigma_{ess}\left(\mathcal{F}\left(\Phi^{k-1}\right)\right) - \gamma = -\gamma$$

$$\mathcal{F}\left(\Phi^k\right)\varphi_i^{k+1} = \epsilon_i^{k+1}\varphi_i^{k+1}$$

$$\mathcal{F}(\tilde{\Phi})\varphi_i = \epsilon_i \varphi_i, 1 \leq i \leq N$$

$$\tilde{\Phi} \in \bigoplus_{i=1}^{N} H^2(\mathbb{R}^3)$$

$$\epsilon_i = \left\langle \varphi_i, \mathcal{F}(\tilde{\Phi})\varphi_i \right\rangle \geq \langle \varphi_i, h\varphi_i \rangle \geq \inf \sigma(h)$$

$$\int \frac{1}{|x|}|w(x)|^2 dx \leq \left\|\frac{1}{|x|}w(x)\right\| \|w\| \leq 2\|\nabla w\|\|w\| \leq \delta\|\nabla w\|^2 + \delta^{-1}\|w\|,$$

$$|\langle w, Vw \rangle| \leq \sum_l Z_l(\delta\|\nabla w\|^2 + \delta^{-1}\|w\|^2)$$

$$\begin{aligned}
\|\nabla w\|^2 &= \langle w, (-\Delta + V)w \rangle - \langle w, Vw \rangle \\
&\leq \langle w, hw \rangle + \sum_l Z_l(\delta\|\nabla w\|^2 + \delta^{-1}\|w\|^2)
\end{aligned}$$

$$\|\nabla w\|^2 \leq C\langle w, hw \rangle + C\delta^{-1}\sum_l Z_l\|w\|^2$$

$$\|\nabla w\|^2 \leq C\langle w, \mathcal{F}(\tilde{\Phi})w\rangle + C\delta^{-1}\sum_l Z_l\|w\|^2$$

$$\mathcal{F}(\tilde{\Phi})\varphi_i = \epsilon_i\varphi_i, \|\varphi_i\| = 1$$

$$\|\nabla\varphi_i\|^2 \leq \tilde{C}_v^2, 1 \leq i \leq N$$

$$\tilde{C}_v := \left(C\nu + C\delta^{-1}\sum_l Z_l\right)^{1/2}$$

$$\left\|\langle x\rangle\varphi_i^0(x)\right\| \leq C_0, 1 \leq i \leq N$$

$$\left\|\langle x\rangle\varphi_i^k(x)\right\| \leq \mathcal{C}, 1 \leq i \leq N$$

$$\left\|\langle x\rangle\varphi_i^k(x)\right\|^2 \leq C_k, 1 \leq i \leq N$$

$$\mathrm{Re}\left\langle\left(-\Delta\varphi_i^{k+1}\right), \rho_m^2\varphi_i^{k+1}\right\rangle = \left\|\nabla\left(\rho_m\varphi_i^{k+1}\right)\right\|^2 - \left\|(\nabla\rho_m)\varphi_i^{k+1}\right\|^2$$

$$\begin{aligned}
0 &= \mathrm{Re}\left\langle\left(-\Delta + V(x) + R^{\Phi^k}(x) - \epsilon_i^{k+1}\right)\varphi_i^{k+1} - S^{\Phi^k}\varphi_i^{k+1}, \rho_m^2\varphi_i^{k+1}\right\rangle \\
&= \left\|\nabla\left(\rho_m\varphi_i^{k+1}\right)\right\|^2 - \left\|(\nabla\rho_m)\varphi_i^{k+1}\right\|^2 \\
&\quad + \left\langle\left(V(x) + R^{\Phi^k}(x) - \epsilon_i^{k+1}\right)\varphi_i^{k+1}, \rho_m^2\varphi_i^{k+1}\right\rangle \\
&\quad - \mathrm{Re}\left\langle S^{\Phi^k}\varphi_i^{k+1}, \rho_m^2\varphi_i^{k+1}\right\rangle \\
&\geq -\left\|(\nabla\rho_m)\varphi_i^{k+1}\right\|^2 + \left\langle\left(V(x) + R^{\Phi^k}(x) - \epsilon_i^{k+1}\right)\varphi_i^{k+1}, \rho_m^2\varphi_i^{k+1}\right\rangle \\
&\quad - \mathrm{Re}\left\langle S^{\Phi^k}\varphi_i^{k+1}, \rho_m^2\varphi_i^{k+1}\right\rangle \\
&\geq -1 + \left\langle\left(V(x) + R^{\Phi^k}(x) - \epsilon_i^{k+1}\right)\varphi_i^{k+1}, \rho_m^2\varphi_i^{k+1}\right\rangle - \mathrm{Re}\left\langle S^{\Phi^k}\varphi_i^{k+1}, \rho_m^2\varphi_i^{k+1}\right\rangle
\end{aligned}$$

$$|\rho_m(x) - \rho_m(y)| = \left|\int_0^1 (x-y)\cdot\nabla\rho_m(t(x-y)+y)dt\right| \leq |x-y|$$

$$\begin{aligned}
&\left|\left\langle S_{jj}^{\Phi^k}\varphi_i^{k+1}, \rho_m^2\varphi_i^{k+1}\right\rangle - \left\langle S_{jj}^{\Phi^k}\rho_m\varphi_i^{k+1}, \rho_m\varphi_i^{k+1}\right\rangle\right| \\
&= \left|\int |x-y|^{-1}\varphi_j^k(y)\overline{\varphi_i^{k+1}}(y)\rho_m(x)(\rho_m(x) - \rho_m(y))\overline{\varphi_j^k}(x)\varphi_i^{k+1}(x)dxdy\right| \\
&\leq \int \left|\varphi_j^k(y)\overline{\varphi_i^{k+1}}(y)\rho_m(x)\overline{\varphi_j^k}(x)\varphi_i^{k+1}(x)\right| dxdy \\
&\leq \left\||\rho_m|^{1/2}\varphi_j^k\right\|\left\||\rho_m|^{1/2}\varphi_i^{k+1}\right\|
\end{aligned}$$

$$\begin{aligned}
\left\||\rho_m|^{1/2}\varphi_i^{k+1}\right\| &= \left(\int |\rho_m(x)||\varphi_i^{k+1}(x)|^2 dx\right)^{1/2} \\
&\leq \left\|\rho_m\varphi_i^{k+1}\right\|^{1/2}\left\|\varphi_i^{k+1}\right\|^{1/2} = \left\|\rho_m\varphi_i^{k+1}\right\|^{1/2}
\end{aligned}$$

$$
\begin{aligned}
&\left|\left\langle S_{jj}^{\Phi^k}\varphi_i^{k+1},\rho_m^2\varphi_i^{k+1}\right\rangle-\left\langle S_{jj}^{\Phi^k}\rho_m\varphi_i^{k+1},\rho_m\varphi_i^{k+1}\right\rangle\right|\\
&\le\left\|\rho_m\varphi_j^k\right\|^{1/2}\left\|\rho_m\varphi_i^{k+1}\right\|^{1/2}\\
&\le(2\gamma)^{-1}N+(2N)^{-1}\gamma\left\|\rho_m\varphi_j^k\right\|\left\|\rho_m\varphi_i^{k+1}\right\|\\
&\le(2\gamma)^{-1}N+(4N)^{-1}\gamma\left\|\rho_m\varphi_j^k\right\|^2+(4N)^{-1}\gamma\left\|\rho_m\varphi_i^{k+1}\right\|^2\\
&\le(2\gamma)^{-1}N+(4N)^{-1}\gamma C_k+(4N)^{-1}\gamma\left\|\rho_m\varphi_i^{k+1}\right\|^2
\end{aligned}
$$

$$
\begin{aligned}
&\left|\left\langle S^{\Phi^k}\varphi_i^{k+1},\rho_m^2\varphi_i^{k+1}\right\rangle-\left\langle S^{\Phi^k}\rho_m\varphi_i^{k+1},\rho_m\varphi_i^{k+1}\right\rangle\right|\\
&\le(2\gamma)^{-1}N^2+4^{-1}\gamma C_k+4^{-1}\gamma\left\|\rho_m\varphi_i^{k+1}\right\|^2
\end{aligned}
$$

$$
\left\langle w,\left(R^{\Phi^k}-S^{\Phi^k}\right)w\right\rangle=\rho_m\varphi_i^{k+1}
$$

$$
\begin{aligned}
0\ge&-1-(2\gamma)^{-1}N^2-4^{-1}\gamma C_k-4^{-1}\gamma\left\|\rho_m\varphi_i^{k+1}\right\|^2\\
&+\left\langle\left(V(x)-\epsilon_i^{k+1}\right)\varphi_i^{k+1},\rho_m^2\varphi_i^{k+1}\right\rangle\\
\ge&-1-(2\gamma)^{-1}N^2-4^{-1}\gamma C_k+\left\langle\left(V(x)+(3/4)\gamma\right)\varphi_i^{k+1},\rho_m^2\varphi_i^{k+1}\right\rangle
\end{aligned}
$$

$$
\begin{aligned}
&2^{-1}\gamma\int_{|x|>r_0}\rho_m^2(x)\left|\varphi_i^{k+1}(x)\right|^2dx\\
&\le1+(2\gamma)^{-1}N^2+4^{-1}\gamma C_k+\int_{|x|\le r_0}|V(x)+(3/4)\gamma|\rho_m^2(x)\left|\varphi_i^{k+1}(x)\right|^2dx\\
&\le1+(2\gamma)^{-1}N^2+4^{-1}\gamma C_k+(1+r_0^2)\left(2\sum_l Z_l\left\|\nabla\varphi_i^{k+1}\right\|+(3/4)\gamma\right)\\
&\le1+(2\gamma)^{-1}N^2+4^{-1}\gamma C_k+(1+r_0^2)\left(2\sum_l Z_l\tilde{C}_b+(3/4)\gamma\right)
\end{aligned}
$$

$$
\begin{aligned}
\int_{|x|>r_0}\langle x\rangle^2\left|\varphi_i^{k+1}(x)\right|^2dx&=\liminf_{m\to\infty}\int_{|x|>r_0}\rho_m^2(x)\left|\varphi_i^{k+1}(x)\right|^2dx\\
&\le2^{-1}C_k+\hat{C}
\end{aligned}
$$

$$
\hat{C}:=2\gamma^{-1}\left\{1+(2\gamma)^{-1}N^2+(1+r_0^2)\left(2\sum_l Z_l\tilde{C}_b+(3/4)\gamma\right)\right\}
$$

$$
\int_{|x|\le r_0}\langle x\rangle^2\left|\varphi_i^{k+1}(x)\right|^2dx\le1+r_0^2
$$

$$
\left\|\langle x\rangle\varphi_i^{k+1}\right\|^2=\int\langle x\rangle^2\left|\varphi_i^{k+1}(x)\right|^2dx\le2^{-1}C_k+\hat{C}+1+r_0^2
$$

$$
C_k=2^{-k}C_0+\check{C}\sum_{j=0}^{k-1}2^{-j}\le C_0+2\check{C}
$$

$$
\left\{\left(\Phi^k,\Phi^{k+1}\right)\right\}d\left(\left(\Phi^k,\Phi^{k+1}\right),\Gamma_{\gamma,\mu}\right)\left\{\left(\Phi^{k_j},\Phi^{k_j+1}\right)\right\}d\left(\left(\Phi^{k_j},\Phi^{k_j+1}\right),\Gamma_{\gamma,\mu}\right)\ge\delta
$$

$$\{\Phi^{k_j}\}\bigoplus_{i=1}^{N} L^2(B_p)$$

$$\left\|\Phi^{k_{j_1}}-\Phi^{k_{j_2}}\right\|_{\oplus_{i=1}^{N} L^2(B_p)}\to 0$$

$$\left\|\Phi^{k_{j_1}}-\Phi^{k_{j_2}}\right\|_{\oplus_{i=1}^{N} L^2(B_{j_0})}< j_0^{-1}$$

$$\left\|\langle x\rangle\Phi^{k}\right\|_{\oplus_{i=1}^{N} L^2(\mathbb{R}^3)}\leq \tilde{C}$$

$$\left\|\Phi^{k_j}\right\|_{\oplus_{i=1}^{N} L^2(\mathbb{R}^3\setminus B_j)}\leq j^{-1}\left\|\langle x\rangle\Phi^{k_j}\right\|_{\oplus_{i=1}^{N} L^2(\mathbb{R}^3\setminus B_j)}\leq \tilde{C}j^{-1}$$

$$\begin{aligned}&\left\|\Phi^{k_{j_1}}-\Phi^{k_{j_2}}\right\|_{\oplus_{i=1}^{N} L^2(\mathbb{R}^3)}\\&\leq \left\|\Phi^{k_{j_1}}-\Phi^{k_{j_2}}\right\|_{\oplus_{i=1}^{N} L^2(B_{j_0})}+\left\|\Phi^{k_{j_1}}-\Phi^{k_{j_2}}\right\|_{\oplus_{i=1}^{N} L^2(\mathbb{R}^3\setminus B_{j_0})}\\&\leq j_0^{-1}+2\tilde{C}j_0^{-1}\end{aligned}$$

$$\{\Phi^{k_j-1}\}\bigoplus_{i=1}^{N} L^2(\mathbb{R}^3)$$

$$\{(\Phi^{k_j-1},\Phi^{k_j})\}\left(\bigoplus_{i=1}^{N} L^2(\mathbb{R}^3)\right)\oplus\left(\bigoplus_{i=1}^{N} L^2(\mathbb{R}^3)\right)\{(\Phi^{k_j-1},\Phi^{k_j})\}$$

$$\mathcal{F}(\Phi^{k_j-1})\varphi_i^{k_j}=\epsilon_i^{k_j}$$

$$\begin{aligned}&\left\|h\left(\varphi_i^{k_{j_1}}-\varphi_i^{k_{j_2}}\right)\right\|\\&\leq\left\|\left(\epsilon_i^{k_{j_1}}-R^{\Phi^{k_{j_1}-1}}+S^{\Phi^{k_{j_1}-1}}\right)\varphi_i^{k_{j_1}}-\left(\epsilon_i^{k_{j_2}}-R^{\Phi^{k_{j_2}-1}}+S^{\Phi^{k_{j_2}-1}}\right)\varphi_i^{k_{j_2}}\right\|.\end{aligned}$$

$$\begin{aligned}\left|\int|x-y|^{-1}\left(\varphi_i^{k_{j_1}-1}-\varphi_i^{k_{j_2}-1}\right)^{*}(y)\varphi_i^{k_{j_1}}(y)dy\right|&\leq 2\left\|\varphi_i^{k_{j_1}-1}-\varphi_i^{k_{j_2}-1}\right\|\left\|\nabla\varphi_i^{k_{j_1}}\right\|\\&\leq 2\tilde{C}_b\left\|\varphi_i^{k_{j_1}-1}-\varphi_i^{k_{j_2}-1}\right\|\end{aligned}$$

$$\begin{aligned}&\left\|h\left(\varphi_i^{k_{j_1}}-\varphi_i^{k_{j_2}}\right)\right\|\\&\leq\hat{C}_1\left(\left\|\Phi^{k_{j_1}}-\Phi^{k_{j_2}}\right\|_{\oplus_{i=1}^{N} L^2(\mathbb{R}^3)}+\left\|\Phi^{k_{j_1}-1}-\Phi^{k_{j_2}-1}\right\|_{\oplus_{i=1}^{N} L^2(\mathbb{R}^3)}\right.\\&\left.+\left|\mathbf{e}^{k_{j_1}}-\mathbf{e}^{k_{j_2}}\right|\right)\end{aligned}$$

$$\bigoplus_{i=1}^{N} H^2(\mathbb{R}^3)$$

$$\{(\mathbf{e}^{k_j},\mathbf{e}^{k_j+1})\}\{(\Phi^{k_j},\Phi^{k_j+1})\}\left(\bigoplus_{i=1}^{N} H^2(\mathbb{R}^3)\right)\bigoplus\left(\bigoplus_{i=1}^{N} H^2(\mathbb{R}^3)\right)$$

$$\{(\Phi^{k_j},\Phi^{k_j+1})\}\{(\mathbf{e}^{k_j},\mathbf{e}^{k_j+1})\}$$

$$\left(\Phi^{\infty},\tilde{\Phi}^{\infty}\right):=\lim_{j\to\infty}\left\{\left(\Phi^{k_j},\Phi^{k_j+1}\right)\right\}$$

$$\left(\mathbf{e}^{\infty},\tilde{\mathbf{e}}^{\infty}\right):=\lim_{j\to\infty}\left\{\left(\mathbf{e}^{k_j},\mathbf{e}^{k_j+1}\right)\right\}$$

$$\mathcal{F}\left(\Phi^{k_j}\right)\varphi_i^{k_j+1}=\epsilon_i^{k_j+1}\varphi_i^{k_j+1}$$

$$\mathcal{F}(\Phi^{\infty})\tilde{\varphi}_i^{\infty}=\tilde{\epsilon}_i^{\infty}\tilde{\varphi}_i^{\infty}$$

$$\mathcal{F}\left(\Phi^{k_j-1}\right)\varphi_i^{k_j}=\epsilon_i^{k_j}\varphi_i^{k_j}$$

$$\lim_{j\to\infty}\left\|\mathcal{F}\left(\Phi^{k_j+1}\right)\varphi_i^{k_j}-\mathcal{F}\left(\Phi^{k_j-1}\right)\varphi_i^{k_j}\right\|=\lim_{j\to\infty}\|\mathcal{G}\left(\Phi^{k_j+1}\right)\varphi_i^{k_j}-\mathcal{G}\left(\Phi^{k_j-1}\right)\varphi_i^{k_j}\|=0$$

$$\begin{aligned}&\left\|\check{A}_{k_j+1}^{+}\Phi^{k_j+1}-\check{A}_{k_j-1}^{-}\Phi^{k_j-1}\right\|_{\oplus_{i=1}^{N}L^2(\mathbb{R}^3)}^2\\&\leq\left\|D_{\Phi^{k_j+1}}-D_{\Phi^{k_j-1}}\right\|_2^2\\&\leq 2\gamma^{-1}\left(\mathcal{E}\left(\Phi^{k_j-1},\Phi^{k_j}\right)-\mathcal{E}\left(\Phi^{k_j},\Phi^{k_j+1}\right)\right)\leq\delta\end{aligned}$$

$$\begin{aligned}\left\|\check{A}_{k_j+1}^{+}\Phi^{k_j+1}\right\|_{\oplus_{i=1}^{N}H^1(\mathbb{R}^3)}&=\left\|\Phi^{k_j+1}\right\|_{\oplus_{i=1}^{N}H^1(\mathbb{R}^3)}\leq\hat{C}_2\\\left\|\check{A}_{k_j-1}^{-}\Phi^{k_j-1}\right\|_{\oplus_{i=1}^{N}H^1(\mathbb{R}^3)}&=\left\|\Phi^{k_j-1}\right\|_{\oplus_{i=1}^{N}H^1(\mathbb{R}^3)}\leq\hat{C}_2\end{aligned}$$

$$\begin{aligned}&\|\mathcal{G}\left(\Phi^{k_j+1}\right)\varphi_i^{k_j}-\mathcal{G}\left(\Phi^{k_j-1}\right)\varphi_i^{k_j}\|\\&\quad=\left\|\mathcal{G}\left(\check{A}_{k_j+1}^{+}\Phi^{k_j+1}\right)\varphi_i^{k_j}-\mathcal{G}\left(\check{A}_{k_j-1}^{-}\Phi^{k_j-1}\right)\varphi_i^{k_j}\right\|\\&\leq\hat{C}_3\left\|\check{A}_{k_j+1}^{+}\Phi^{k_j+1}-\check{A}_{k_j-1}^{-}\Phi^{k_j-1}\right\|_{\oplus_{i=1}^{N}L^2(\mathbb{R}^3)}\\&\quad\cdot\left(\left\|\check{A}_{k_j+1}^{+}\Phi^{k_j+1}\right\|_{\oplus_{i=1}^{N}H^1(\mathbb{R}^3)}+\left\|\check{A}_{k_j-1}^{-}\Phi^{k_j-1}\right\|_{\oplus_{i=1}^{N}H^1(\mathbb{R}^3)}+\left\|\varphi_i^{k_j}\right\|_{H^1(\mathbb{R}^3)}\right)\\&\leq 3\hat{C}_2\hat{C}_3\left\|\check{A}_{k_j+1}^{+}\Phi^{k_j+1}-\check{A}_{k_j-1}^{-}\Phi^{k_j-1}\right\|_{\oplus_{i=1}^{N}L^2(\mathbb{R}^3)}\leq 3\hat{C}_2\hat{C}_3\delta^{1/2}\end{aligned}$$

$$\lim_{j\to\infty}\left\|\mathcal{G}\left(\Phi^{k_j+1}\right)\varphi_i^{k_j}-\mathcal{G}\left(\Phi^{k_j-1}\right)\varphi_i^{k_j}\right\|=0$$

$$\lim_{j\to\infty}\mathcal{F}\left(\Phi^{k_j-1}\right)\varphi_i^{k_j}=\lim_{j\to\infty}\mathcal{F}\left(\Phi^{k_j+1}\right)\varphi_i^{k_j}=\mathcal{F}\left(\tilde{\Phi}^{\infty}\right)\varphi_i^{\infty}$$

$$\mathcal{F}\left(\tilde{\Phi}^{\infty}\right)\varphi_i^{\infty}=\epsilon_i^{\infty}\varphi_i^{\infty}$$

$$\left(\bigoplus_{i=1}^{N}H^2(\mathbb{R}^3)\right)\bigoplus\left(\bigoplus_{i=1}^{N}H^2(\mathbb{R}^3)\right)$$

$$\|\langle x\rangle\Phi\|_{\oplus_{i=1}^{N}L^2(\mathbb{R}^3)},\|\langle x\rangle\tilde{\Phi}\|_{\oplus_{i=1}^{N}L^2(\mathbb{R}^3)}\leq C_{\gamma}'$$

$$0 \geq -1 - (2\gamma)^{-1}N^2 - (4N)^{-1}\gamma \sum_{j=1}^{N} \left\|\rho_m \tilde{\varphi}_j\right\|^2 - 4^{-1}\gamma \|\rho_m \varphi_i\|^2$$
$$+\langle (V(x) - \epsilon_i)\varphi_i, \rho_m^2 \varphi_i \rangle, 1 \leq i \leq N$$

$$0 \geq -1 - (2\gamma)^{-1}N^2 - (4N)^{-1}\gamma \sum_{j=1}^{N} \|\rho_m \varphi_i\|^2 - 4^{-1}\gamma \|\rho_m \tilde{\varphi}_i\|^2$$
$$+\langle (V(x) - \tilde{\epsilon}_i)\tilde{\varphi}_i, \rho_m^2 \tilde{\varphi}_i \rangle, 1 \leq i \leq N$$

$$0 \geq -2N - \gamma^{-1}N^3 + \sum_{i=1}^{N} \langle (V(x) + \gamma/2)\varphi_i, \rho_m^2 \varphi_i \rangle + \sum_{i=1}^{N} \langle (V(x) + \gamma/2)\varphi_i, \rho_m^2 \varphi_i \rangle$$

$$4^{-1}\gamma \sum_{i=1}^{N} \int_{|x|>r_1} \rho_m^2(x)(|\varphi_i(x)|^2 + |\tilde{\varphi}_i(x)|^2)dx$$
$$\leq 2N + \gamma^{-1}N^3 + \sum_{i=1}^{N} \int_{|x|\leq r_1} \rho_m^2(x)(|V(x)| + \gamma/2)(|\varphi_i(x)|^2 + |\tilde{\varphi}_i(x)|^2)dx$$
$$\leq 2N + \gamma^{-1}N^3 + N(1 + r_1^2)\left(4\sum_{l} Z_l \tilde{C}_b + \gamma\right)$$

$$4^{-1}\gamma \sum_{i=1}^{N} \int_{|x|>r_1} \langle x \rangle^2(|\varphi_i(x)|^2 + |\tilde{\varphi}_i(x)|^2)dx$$
$$\leq 2N + \gamma^{-1}N^3 + N(1 + r_1^2)\left(4\sum_{l} Z_l \tilde{C}_b + \gamma\right)$$

$$\int_{|x|\leq r_1} \langle x \rangle^2(|\varphi_i(x)|^2 + |\tilde{\varphi}_i(x)|^2)dx \leq 2(1 + r_1^2)$$

$$\sum_{i=1}^{N} (\|\langle x \rangle \varphi_i\|^2 + \|\langle x \rangle \tilde{\varphi}_i\|^2)$$
$$\leq 4\gamma^{-1}\left(2N + \gamma^{-1}N^3 + N(1 + r_1^2)\left(4\sum_{l} Z_l \tilde{C}_b + \gamma\right)\right) + 2N(1 + r_1^2)$$

$$C_\gamma' := \left\{4\gamma^{-1}\left(2N + \gamma^{-1}N^3 + N(1 + r_1^2)\left(4\sum_{l} Z_l \tilde{C}_b + \gamma\right)\right)\right.$$
$$\left. +2N(1 + r_1^2)\right\}^{1/2}$$

$$\left(\bigoplus_{i=1}^{N} H^2(\mathbb{R}^3)\right) \bigoplus \left(\bigoplus_{i=1}^{N} H^2(\mathbb{R}^3)\right)$$

$$\begin{aligned} \mathcal{F}(\tilde{\Phi}^{k_j})\varphi_i^{k_j} &= \epsilon_i^{k_j}\varphi_i^{k_j} \\ \mathcal{F}(\Phi^{k_j})\tilde{\varphi}_i^{k_j} &= \tilde{\epsilon}_i^{k_j}\tilde{\varphi}_i^{k_j} \end{aligned} \quad 1 \leq i \leq N$$

$$\mathcal{F}(\tilde{\Phi}^{\infty})\varphi_i^{\infty} = \epsilon_i^{\infty}\varphi_i^{\infty}$$
$$\mathcal{F}(\Phi^{\infty})\tilde{\varphi}_i^{\infty} = \tilde{\epsilon}_i^{\infty}\tilde{\varphi}_i^{\infty} \quad 1 \le i \le N$$

$$Y_1 := \left(\bigoplus_{i=1}^{N} H^2(\mathbb{R}^3)\right) \bigoplus \left(\bigoplus_{i=1}^{N} H^2(\mathbb{R}^3)\right) \bigoplus \mathbb{R}^N \bigoplus \mathbb{R}^N$$

$$Y_2 := \left(\bigoplus_{i=1}^{N} L^2(\mathbb{R}^3)\right) \bigoplus \left(\bigoplus_{i=1}^{N} L^2(\mathbb{R}^3)\right) \bigoplus \mathbb{R}^N \bigoplus \mathbb{R}^N$$

$$f(\Phi, \tilde{\Phi}, \mathbf{e}, \tilde{\mathbf{e}}) := \mathcal{E}(\Phi, \tilde{\Phi}) - \sum_{i=1}^{N} \epsilon_i(\|\varphi_i\|^2 - 1) - \sum_{i=1}^{N} \tilde{\epsilon}_i(\|\tilde{\varphi}_i\|^2 - 1)$$

$$\left\langle\left\langle[\Phi^1, \tilde{\Phi}^1, \mathbf{e}^1, \tilde{\mathbf{e}}^1], [\Phi^2, \tilde{\Phi}^2, \mathbf{e}^2, \tilde{\mathbf{e}}^2]\right\rangle\right\rangle := 2\sum_{i=1}^{N} \mathrm{Re}\langle\varphi_i^1, \varphi_i^2\rangle + 2\sum_{i=1}^{N} \mathrm{Re}\langle\tilde{\varphi}_i^1, \tilde{\varphi}_i^2\rangle + \sum_{i=1}^{N} \epsilon_i^1\epsilon_i^2 + \sum_{i=1}^{N} \tilde{\epsilon}_i^1\tilde{\epsilon}_i^2$$

$$df([\Phi^0, \tilde{\Phi}^0, \mathbf{e}^0, \tilde{\mathbf{e}}^0], [\Phi^1, \tilde{\Phi}^1, \mathbf{e}^1, \tilde{\mathbf{e}}^1]) = \left\langle\left\langle[\Phi^1, \tilde{\Phi}^1, \mathbf{e}^1, \tilde{\mathbf{e}}^1], F(\Phi^0, \tilde{\Phi}^0, \mathbf{e}^0, \tilde{\mathbf{e}}^0)\right\rangle\right\rangle$$

$$\begin{aligned} &F\,(\Phi, \tilde{\Phi}, \mathbf{e}, \tilde{\mathbf{e}}) \\ &\quad = \left[\,{}^t\big(F_1(\Phi, \tilde{\Phi}, \mathbf{e}), \dots, F_N(\Phi, \tilde{\Phi}, \mathbf{e})\big),\ {}^t\big(F_1(\tilde{\Phi}, \Phi, \tilde{\mathbf{e}}), \dots, F_N(\tilde{\Phi}, \Phi, \tilde{\mathbf{e}})\big)\right. \\ &\quad \left.(1 - \|\varphi_1\|^2, \dots, 1 - \|\varphi_N\|^2), (1 - \|\tilde{\varphi}_1\|^2, \dots, 1 - \|\tilde{\varphi}_N\|^2)\right] \end{aligned}$$

$$F_i: \left(\bigoplus_{i=1}^{N} H^2(\mathbb{R}^3)\right) \bigoplus \left(\bigoplus_{i=1}^{N} H^2(\mathbb{R}^3)\right) \bigoplus \mathbb{R}^N \to L^2(\mathbb{R}^3)$$

$$F_i(\Phi, \tilde{\Phi}, \mathbf{e}) := \mathcal{F}(\tilde{\Phi})\varphi_i - \epsilon_i\varphi_i$$

$$F'(\Phi', \tilde{\Phi}', \mathbf{e}', \tilde{\mathbf{e}}') = L + M$$

$$G(\Phi, \tilde{\Phi}): \left(\bigoplus_{i=1}^{N} H^2(\mathbb{R}^3)\right) \bigoplus \left(\bigoplus_{i=1}^{N} H^2(\mathbb{R}^3)\right) \to L^2(\mathbb{R}^3)$$

$$G'_{\varphi_i} = G'_{\varphi_i}(\Phi', \tilde{\Phi}'): H^2(\mathbb{R}^3) \to L^2(\mathbb{R}^3)$$

$$\begin{aligned} &G'_{\varphi_i}(\Phi', \tilde{\Phi}')h \\ &:= \lim_{t \to 0}\left[G(\varphi_1' \dots, \varphi_i' + th, \dots, \varphi_N', \tilde{\Phi}') - G(\varphi_1' \dots, \varphi_i', \dots, \varphi_N', \tilde{\Phi}')\right]/t \end{aligned}$$

$$G'_{\tilde{\varphi}_i} = G'_{\tilde{\varphi}_i}(\Phi', \tilde{\Phi}'): H^2(\mathbb{R}^3) \to L^2(\mathbb{R}^3)$$

$$\check{F}(\Phi, \tilde{\Phi}): \left(\bigoplus_{i=1}^{N} H^2(\mathbb{R}^3)\right) \bigoplus \left(\bigoplus_{i=1}^{N} H^2(\mathbb{R}^3)\right) \to \left(\bigoplus_{i=1}^{N} L^2(\mathbb{R}^3)\right) \bigoplus \left(\bigoplus_{i=1}^{N} L^2(\mathbb{R}^3)\right)$$

$$\check{F}(\Phi,\tilde{\Phi}) := \left[{}^t\left(F_1(\Phi,\tilde{\Phi},\mathbf{e}'),\dots,F_N(\Phi,\tilde{\Phi},\mathbf{e}')\right),\ {}^t\left(F_1(\tilde{\Phi},\Phi,\tilde{\mathbf{e}}'),\dots,F_N(\tilde{\Phi},\Phi,\tilde{\mathbf{e}}')\right)\right].$$

$$\check{F}'(\Phi',\tilde{\Phi}'):\left(\bigoplus_{i=1}^{N} H^2(\mathbb{R}^3)\right)\bigoplus\left(\bigoplus_{i=1}^{N} H^2(\mathbb{R}^3)\right)\to\left(\bigoplus_{i=1}^{N} L^2(\mathbb{R}^3)\right)\bigoplus\left(\bigoplus_{i=1}^{N} L^2(\mathbb{R}^3)\right)$$

$$\check{F}'(\Phi',\tilde{\Phi}') = \begin{pmatrix} K(\tilde{\Phi}',\mathbf{e}') & T^{\Phi',\tilde{\Phi}'} \\ T^{\tilde{\Phi}',\Phi'} & K(\Phi',\tilde{\mathbf{e}}') \end{pmatrix}$$

$$K(\tilde{\Phi}',\mathbf{e}') := \operatorname{diag}\left[\mathcal{F}(\tilde{\Phi}')-\epsilon_1',\dots,\mathcal{F}(\tilde{\Phi}')-\epsilon_N'\right]$$

$$T_{ij}^{\Phi',\tilde{\Phi}'} = \left[F_i(\Phi,\tilde{\Phi},\mathbf{e}')\right]'_{\tilde{\varphi}_j} = \hat{S}_{ij}^{\Phi',\tilde{\Phi}'} + \check{S}_{ij}^{\Phi',\tilde{\Phi}'} - Q_{ij}^{\Phi',\tilde{\Phi}'} - \check{S}_{ji}^{\tilde{\Phi}',\Phi'}$$

$$\left(\hat{S}_{ij}^{\Phi',\tilde{\Phi}'}w\right)(x) := \left(\int |x-y|^{-1}\tilde{\varphi}_j'(y)w(y)dy\right)\varphi_i'(x)$$
$$\left(\check{S}_{ij}^{\Phi',\tilde{\Phi}'}w\right)(x) := \left(\int |x-y|^{-1}\bar{w}(y)\tilde{\varphi}_j'(y)dy\right)\varphi_i'(x)$$
$$\left(Q_{ij}^{\Phi',\tilde{\Phi}'}w\right)(x) := \left(\int |x-y|^{-1}\overline{\tilde{\varphi}_j'}(y)\varphi_i'(y)dy\right)w(x)$$

$$\check{F}'(\Phi',\tilde{\Phi}') = \mathcal{K} + \mathcal{T}$$

$$\mathcal{K} := \begin{pmatrix} K(\tilde{\Phi}',\mathbf{e}') & 0 \\ 0 & K(\Phi',\tilde{\mathbf{e}}') \end{pmatrix}, \mathcal{T} := \begin{pmatrix} 0 & T^{\Phi',\tilde{\Phi}'} \\ T^{\tilde{\Phi}',\Phi'} & 0 \end{pmatrix}$$

$$\mathcal{T} = \hat{\mathcal{S}} + \check{\mathcal{S}} - \mathcal{Q} - {}^t\check{\mathcal{S}}$$

$$\mathcal{K} = \mathcal{H} + \mathcal{R} - \mathcal{S},$$

$$\mathcal{H} := \operatorname{diag}[h-\epsilon_1',\dots,h-\epsilon_N',h-\tilde{\epsilon}_1',\dots,h-\tilde{\epsilon}_N']$$
$$\mathcal{R} := \operatorname{diag}\left[R^{\tilde{\Phi}'},\dots,R^{\tilde{\Phi}'},R^{\Phi'},\dots,R^{\Phi'}\right]$$
$$\mathcal{S} := \operatorname{diag}\left[S^{\tilde{\Phi}'},\dots,S^{\tilde{\Phi}'},S^{\Phi'},\dots,S^{\Phi'}\right]$$

$$\left(\bigoplus_{i=1}^{N} L^2(\mathbb{R}^3)\right)\bigoplus\left(\bigoplus_{i=1}^{N} L^2(\mathbb{R}^3)\right)$$

$$W := {}^t(w_1,\dots,w_N,\tilde{w}_1,\dots,\tilde{w}_N) \in \left(\bigoplus_{i=1}^{N} L^2(\mathbb{R}^3)\right)\bigoplus\left(\bigoplus_{i=1}^{N} L^2(\mathbb{R}^3)\right)$$

$$\begin{aligned}\langle W,(\mathcal{R}-\mathcal{Q})W\rangle =&\sum_{i=1}^{N}\left\langle w_i,R^{\tilde{\Phi}'}w_i\right\rangle+\sum_{i=1}^{N}\left\langle \tilde{w}_i,R^{\Phi'}\tilde{w}_i\right\rangle\\&-\sum_{i,j=1}^{N}\left\langle w_i,Q_{ij}^{\Phi',\tilde{\Phi}'}\tilde{w}_j\right\rangle-\sum_{i,j=1}^{N}\left\langle \tilde{w}_i,Q_{ij}^{\tilde{\Phi}',\Phi'}w_j\right\rangle\\=&\sum_{i,j=1}^{N}\left\{\left\langle w_i,Q_{jj}^{\tilde{\Phi}'}w_i\right\rangle+\left\langle \tilde{w}_j,Q_{ii}^{\Phi'}\tilde{w}_j\right\rangle\right.\\&\left.-\left\langle w_i,Q_{ij}^{\Phi',\tilde{\Phi}'}\tilde{w}_j\right\rangle-\left\langle \tilde{w}_j,Q_{ji}^{\tilde{\Phi}',\Phi'}w_i\right\rangle\right\}.\end{aligned}$$

$$\begin{aligned}&\int |x-y|^{-1}\left|w_i(x)\tilde{\varphi}_j'(y)-\tilde{w}_j(x)\varphi_i'(y)\right|^2dxdy\\&=\left\langle w_i,Q_{jj}^{\tilde{\Phi}'}w_i\right\rangle+\left\langle \tilde{w}_j,Q_{ii}^{\Phi'}\tilde{w}_j\right\rangle-\left\langle w_i,Q_{ij}^{\Phi',\tilde{\Phi}'}\tilde{w}_j\right\rangle-\left\langle \tilde{w}_j,Q_{ji}^{\tilde{\Phi}',\Phi'}w_i\right\rangle\end{aligned}$$

$$h=hE(-\epsilon/2)+h(1-E(-\epsilon/2))$$

$$\begin{aligned}\mathcal{H}_1:=&\mathrm{diag}[h(1-E(-\epsilon/2))-\epsilon_1',\dots,h(1-E(-\epsilon/2))-\epsilon_N'\\&h(1-E(-\epsilon/2))-\tilde{\epsilon}_1',\dots,h(1-E(-\epsilon/2))-\tilde{\epsilon}_N']\end{aligned}$$

$$\mathcal{H}_2:=\mathrm{diag}[hE(-\epsilon/2),\dots,hE(-\epsilon/2),hE(-\epsilon/2),\dots,hE(-\epsilon/2)].$$

$$\check{F}'\left(\Phi',\tilde{\Phi}'\right)=\mathcal{H}_1+\mathcal{H}_2+\mathcal{R}-\mathcal{S}+\hat{\mathcal{S}}+\check{\mathcal{S}}-\mathcal{Q}-{}^t\check{\mathcal{S}}=\mathcal{L}+\mathcal{M}$$

$$\mathcal{L}:=\mathcal{H}_1+\mathcal{R}-\mathcal{Q}$$

$$\mathcal{M}:=\mathcal{H}_2-\mathcal{S}+\hat{\mathcal{S}}+\check{\mathcal{S}}-{}^t\mathfrak{S}$$

$$\left(\bigoplus_{i=1}^{N}L^2(\mathbb{R}^3)\right)\bigoplus\left(\bigoplus_{i=1}^{N}L^2(\mathbb{R}^3)\right)$$

$$\mathrm{Ran}\mathcal{L}=\left(\bigoplus_{i=1}^{N}L^2(\mathbb{R}^3)\right)\bigoplus\left(\bigoplus_{i=1}^{N}L^2(\mathbb{R}^3)\right)$$

$$\left(\bigoplus_{i=1}^{N}H^2(\mathbb{R}^3)\right)\bigoplus\left(\bigoplus_{i=1}^{N}H^2(\mathbb{R}^3)\right)\left(\bigoplus_{i=1}^{N}L^2(\mathbb{R}^3)\right)\bigoplus\left(\bigoplus_{i=1}^{N}L^2(\mathbb{R}^3)\right)$$

$$\hat{F}(\mathbf{e},\tilde{\mathbf{e}}):={}^t\left(F_1\left(\Phi',\tilde{\Phi}',\mathbf{e}\right),\dots,F_N\left(\Phi',\tilde{\Phi}',\mathbf{e}\right),F_1\left(\tilde{\Phi}',\Phi',\tilde{\mathbf{e}}\right),\dots,F_N\left(\tilde{\Phi}',\Phi',\tilde{\mathbf{e}}\right)\right)$$

$$\begin{aligned}&F'(\Phi',\tilde{\Phi}',\mathbf{e}',\tilde{\mathbf{e}}')[\Phi,\tilde{\Phi},\mathbf{e},\tilde{\mathbf{e}}]\\&=\left[\tilde{F}'\left(\Phi',\tilde{\Phi}'\right)[\Phi,\tilde{\Phi}]+\hat{F}'(\mathbf{e}',\tilde{\mathbf{e}}')[\mathbf{e},\tilde{\mathbf{e}}]\right.\\&\quad\left.-2\mathrm{Re}\langle\varphi_1,\varphi_1'\rangle,\dots,-2\mathrm{Re}\langle\varphi_N,\varphi_N'\rangle,-2\mathrm{Re}\langle\tilde{\varphi}_1,\tilde{\varphi}_1'\rangle,\dots,-2\mathrm{Re}\langle\tilde{\varphi}_N,\tilde{\varphi}_N'\rangle\right]\\&=L[\Phi,\tilde{\Phi},\mathbf{e},\tilde{\mathbf{e}}]+M[\Phi,\tilde{\Phi},\mathbf{e},\tilde{\mathbf{e}}]\end{aligned}$$

$$L[\Phi,\tilde{\Phi},\mathbf{e},\tilde{\mathbf{e}}]:=[\mathcal{L}[\Phi,\tilde{\Phi}],\mathbf{e},\tilde{\mathbf{e}}]$$
$$M[\Phi,\tilde{\Phi},\mathbf{e},\tilde{\mathbf{e}}]$$
$$:=\left[\mathcal{M}[\Phi,\tilde{\Phi}]-\left[\mathbf{e}\Phi',\tilde{\mathbf{e}}\tilde{\Phi}'\right],-2\mathrm{Re}\langle\varphi_1,\varphi_1'\rangle-\epsilon_1,\dots,-2\mathrm{Re}\langle\varphi_N,\varphi_N'\rangle-\epsilon_N,\right.$$
$$\left.-2\mathrm{Re}\langle\tilde{\varphi}_1,\tilde{\varphi}_1'\rangle-\tilde{\epsilon}_1,\dots,-2\mathrm{Re}\langle\tilde{\varphi}_N,\tilde{\varphi}_N'\rangle-\tilde{\epsilon}_N\right]$$

$$F(x+h)=\sum_{m=0}^{\infty}\frac{1}{m!}d^mF(x,h^m)$$

$$|f(x)-f(x^c)|^{1-\theta}\le\kappa\|F(x)\|_Z$$

$$\|\tilde{x}\|_X=\|F'(x^c)^{-1}F'(x^c)\tilde{x}\|_X\le\check{C}_1\|F'(x^c)\tilde{x}\|_{\tilde{Z}}=\check{C}_1\|F'(x^c)\tilde{x}\|_Z$$

$$F(x)=F(x^c)+F'(x^c)(x-x^c)+o(\|x-x^c\|_X)=F'(x^c)(x-x^c)+o(\|x-x^c\|_X)$$

$$\|F(x)\|_Z\ge\check{C}_1^{-1}\|x-x^c\|_X-\tau\|x-x^c\|_X\ge\check{C}_2\|x-x^c\|_X$$

$$f(x)=f(x^c)+\int_0^1(1-t)d^2f(x^c+t(x-x^c),(x-x^c)^2)dt$$

$$|f(x)-f(x^c)|\le\check{C}_3\|x-x^c\|_X^2$$

$$\begin{aligned}
&|f\big(x_1,\omega(x_1)\big)-f(x_1^c,x_2^c)|^{1-\theta}\\
&\quad=\left|f\big(x_1,\omega(x_1)\big)-f\big(x_1^c,\omega(x_1^c)\big)\right|^{1-\theta}\\
&\quad=\left|f\big(x_1^c+\mathbf{t}\cdot\mathbf{v},\omega(x_1^c+\mathbf{t}\cdot\mathbf{v})\big)-f\big(x_1^c,\omega(x_1^c)\big)\right|^{1-\theta}\\
&\quad=\kappa_1\sum_{j=1}^{\nu}|\left\langle\left\langle v_j,F\big(x_1^c+\mathbf{t}\cdot\mathbf{v},\omega(x_1^c+\mathbf{t}\cdot\mathbf{v})\big)\right\rangle\right\rangle\\
&\quad+\left\langle\left\langle\omega'(x_1^c+\mathbf{t}\cdot\mathbf{v})[v_j],F\big(x_1^c+\mathbf{t}\cdot\mathbf{v},\omega(x_1^c+\mathbf{t}\cdot\mathbf{v})\big)\right\rangle\right\rangle|\\
&\quad\le\kappa_2\left\|F\big(x_1^c+\mathbf{t}\cdot\mathbf{v},\omega(x_1^c+\mathbf{t}\cdot\mathbf{v})\big)\right\|_Z\\
&\quad=\kappa_2\left\|F\big(x_1,\omega(x_1)\big)\right\|_Z
\end{aligned}$$

$$\left\|\omega'(x_1^c+\mathbf{t}\cdot\mathbf{v})[v_j]\right\|_Z\le\left\|\omega'(x_1^c+\mathbf{t}\cdot\mathbf{v})[v_j]\right\|_X\le C$$

$$\left[P_{\tilde{Z}}F_{x_2}'(x_1^c,x_2^c)\right]^{-1}:\tilde{Z}\to X_2$$

$$(P_{\tilde{Z}}\circ F)'(x)=P_{\tilde{Z}}F'(x))$$

$$\begin{aligned}
\|\tilde{x}_2\|_{X_2}&=\left\|\left[P_{\tilde{Z}}F_{x_2}'(x_1^c,x_2^c)\right]^{-1}P_{\tilde{Z}}F_{x_2}'(x_1^c,x_2^c)\tilde{x}_2\right\|_{X_2}\\
&\le\check{C}_4\left\|P_{\tilde{Z}}F_{x_2}'(x_1^c,x_2^c)\tilde{x}_2\right\|_{\tilde{Z}}=\check{C}_4\left\|P_{\tilde{Z}}F_{x_2}'(x_1^c,x_2^c)\tilde{x}_2\right\|_Z
\end{aligned}$$

$$\begin{aligned}
&\left\|P_{\tilde{Z}}F_{x_2}'\big(x_1,\omega(x_1)\big)\tilde{x}_2\right\|_Z\\
&\ge\left\|P_{\tilde{Z}}F_{x_2}'(x_1^c,x_2^c)\tilde{x}_2\right\|_Z-\left\|\left(P_{\tilde{Z}}F_{x_2}'\big(x_1,\omega(x_1)\big)-P_{\tilde{Z}}F_{x_2}'(x_1^c,x_2^c)\right)\tilde{x}_2\right\|_Z\\
&\ge\check{C}_5\|\tilde{x}_2\|_{X_2}
\end{aligned}$$

$$
\begin{aligned}
&P_{\tilde{Z}}F(x_1,x_2)\\
&= P_{\tilde{Z}}F\big(x_1,\omega(x_1)\big) + P_{\tilde{Z}}F'_{x_2}\big(x_1,\omega(x_1)\big)\big(x_2-\omega(x_1)\big) + o\big(\|x_2-\omega(x_1)\|_{X_2}\big)\\
&= P_{\tilde{Z}}F'_{x_2}\big(x_1,\omega(x_1)\big)\big(x_2-\omega(x_1)\big) + o\big(\|x_2-\omega(x_1)\|_{X_2}\big)
\end{aligned}
$$

$$
\|P_{\tilde{Z}}F(x_1,x_2)\|_Z \geq \check{C}_6\|x_2-\omega(x_1)\|_{X_2},
$$

$$
\begin{aligned}
\big\|F\big(x_1,\omega(x_1)\big)\big\|_Z &\leq \|F(x_1,x_2)\|_Z + \big\|F(x_1,x_2)-F\big(x_1,\omega(x_1)\big)\big\|_Z\\
&\leq \|F(x_1,x_2)\|_Z + \check{C}_7\|x_2-\omega(x_1)\|_{X_2}\\
&\leq \big(1+\check{C}_7\check{C}_6^{-1}\big)\|F(x_1,x_2)\|_Z
\end{aligned}
$$

$$
\begin{aligned}
&f(x_1,x_2)-f\big(x_1,\omega(x_1)\big)\\
&= \Big\langle\big\langle x_2-\omega(x_1), P_{\tilde{Z}^\perp}F\big(x_1,\omega(x_1)\big)\big\rangle\Big\rangle + O\big(\|x_2-\omega(x_1)\|_{X_2}^2\big)
\end{aligned}
$$

$$
\big|f(x_1,x_2)-f\big(x_1,\omega(x_1)\big)\big| \leq \check{C}_8\|x_2-\omega(x_1)\|_{X_2}^2
$$

$$
\big|f(x_1,x_2)-f\big(x_1,\omega(x_1)\big)\big|^{1/2} \leq \check{C}_6^{-1}\check{C}_8^{1/2}\|F(x_1,x_2)\|_Z
$$

$$
\begin{aligned}
&|\,f(x_1,x_2)-f(x^c)|^{1-\theta}\\
&\quad= \big|f(x_1,x_2)-f\big(x_1,\omega(x_1)\big)+f\big(x_1,\omega(x_1)\big)-f(x^c)\big|^{1-\theta}\\
&\quad\leq 2^{1-\theta}\left(\big|f(x_1,x_2)-f\big(x_1,\omega(x_1)\big)\big|^{1-\theta}+\big|f\big(x_1,\omega(x_1)\big)-f(x^c)\big|^{1-\theta}\right)\\
&\quad\leq 2^{1-\theta}\left(\big|f(x_1,x_2)-f\big(x_1,\omega(x_1)\big)\big|^{1/2}+\big|f\big(x_1,\omega(x_1)\big)-f(x^c)\big|^{1-\theta}\right)\\
&\quad\leq 2^{1-\theta}\left(\check{C}_6^{-1}\check{C}_8^{1/2}+\kappa_2\big(1+\check{C}_7\check{C}_6^{-1}\big)\right)\|F(x_1,x_2)\|_Z
\end{aligned}
$$

$$
\kappa = 2^{1-\theta}\left(\check{C}_6^{-1}\check{C}_8^{1/2}+\kappa_2(1+\check{C}_7\check{C}_6^{-1}\right)
$$

$$
\sum_{k=1}^{k_0}\alpha_{k+1} = \sum_{k=1}^{k_0}\frac{\alpha_{k+1}}{\alpha_k^{1/2}}\alpha_k^{1/2} \leq \left(\sum_{k=1}^{k_0}\frac{\alpha_{k+1}^2}{\alpha_k}\right)^{1/2}\left(\sum_{k=1}^{k_0}\alpha_k\right)^{1/2}
$$

$$
\sum_{k=1}^{k_0}\alpha_k \leq \alpha_1 + \sum_{k=1}^{k_0}\alpha_{k+1} \leq \alpha_1 + \left(\sum_{k=1}^{k_0}\frac{\alpha_{k+1}^2}{\alpha_k}\right)^{1/2}\left(\sum_{k=1}^{k_0}\alpha_k\right)^{1/2}
$$

$$
\left(\sum_{k=1}^{k_0}\alpha_k\right)^{1/2} \leq \alpha_1\left(\sum_{k=1}^{k_0}\alpha_k\right)^{-1/2} + \left(\sum_{k=1}^{k_0}\frac{\alpha_{k+1}^2}{\alpha_k}\right)^{1/2} \leq \alpha_1^{1/2} + \left(\sum_{k=1}^{k_0}\frac{\alpha_{k+1}^2}{\alpha_k}\right)^{1/2}
$$

$$
\sum_{k=1}^{\infty}\frac{\alpha_{k+1}^2}{\alpha_k}
$$

$$
\sum_{k=1}^{k_0}\alpha_k \leq C^2
$$

$$\sum_{k=1}^{\infty} \alpha_k \leq C^2$$

$$\mathcal{F}\left(\Xi^{k-1}\right)\xi_i^k = \sum_{j=1}^{N} \epsilon_{ij}^k \xi_j^k$$

$$\begin{aligned}&\left\|\Xi^{k+1} - \Xi^{k-1}\right\|_{\oplus_{i=1}^N H^2(\mathbb{R}^3)}\\&\leq \beta_\zeta \left(\left\|\Xi^k - \Xi^{k-2}\right\|_{\oplus_{i=1}^N L^2(\mathbb{R}^3)} + \left\|\Xi^{k+1} - \Xi^{k-1}\right\|_{\oplus_{i=1}^N L^2(\mathbb{R}^3)}\right)\end{aligned}$$

$$\left\|\nabla \xi_i^k\right\| \leq \tilde{C}_\zeta', 1 \leq i \leq N$$

$$\mathcal{F}\left(\Xi^{k-2}\right)\xi_i^{k-1} = \sum_{j=1}^{N} \epsilon_{ij}^{k-1} \xi_j^{k-1}$$

$$\mathcal{F}\left(\Xi^{k}\right)\xi_i^{k+1} = \sum_{j=1}^{N} \epsilon_{ij}^{k+1} \xi_j^{k+1}$$

$$\begin{aligned}&\left\|h\left(\xi_i^{k+1} - \xi_i^{k-1}\right)\right\|\\&= \left\|\mathcal{G}\left(\Xi^k\right)\xi_i^{k+1} - \sum_{j=1}^{N} \epsilon_{ij}^{k+1}\xi_j^{k+1} - \mathcal{G}\left(\Xi^{k-2}\right)\xi_i^{k-1} - \sum_{j=1}^{N} \epsilon_{ij}^{k-1}\xi_j^{k-1}\right\|\\&\leq \tilde{\beta}_\zeta \left(\left\|\Xi^k - \Xi^{k-2}\right\|_{\oplus_{i=1}^N L^2(\mathbb{R}^3)} + \left\|\Xi^{k+1} - \Xi^{k-1}\right\|_{\oplus_{i=1}^N L^2(\mathbb{R}^3)}\right.\\&\left.+ \sum_{j=1}^{N} \left|\epsilon_{ij}^{k+1} - \epsilon_{ij}^{k-1}\right|\right)\end{aligned}$$

$$\epsilon_{ij}^{k-1} = \left\langle \xi_j^{k-1}, \mathcal{F}\left(\Xi^{k-2}\right)\xi_i^{k-1}\right\rangle$$
$$\epsilon_{ij}^{k+1} = \left\langle \xi_j^{k+1}, \mathcal{F}\left(\Xi^{k}\right)\xi_i^{k+1}\right\rangle$$

$$\left|\epsilon_{ij}^{k+1} - \epsilon_{ij}^{k-1}\right| \leq \hat{\beta}_\zeta \left(\left\|\Xi^k - \Xi^{k-2}\right\|_{\oplus_{i=1}^N L^2(\mathbb{R}^3)} + \left\|\xi_i^{k+1} - \xi_i^{k-1}\right\| + \left\|\xi_j^{k+1} - \xi_j^{k-1}\right\|\right)$$

$$\left\|D_{\Phi^{k+1}} - D_{\Phi^{k-1}}\right\|_2 = 0$$

$$\mathcal{F}\left(\Phi^{k+1}\right) = \mathcal{F}\left(\Phi^{k-1}\right)$$

$$\left\|A_{k+2t+1}\Phi^{k+2t+1} - \Phi^{k+1}\right\| = 0$$

$$\left\|D_{\Phi^{k+1}} - D_{\Phi^{k-1}}\right\|_2 > \mathcal{E}\left(\Phi^k, \Phi^{k+1}\right)$$

$$\mu = \mathcal{E}\left(\Phi^k, \Phi^{k+1}\right) \geq \mathcal{E}\left(\Phi^{k+1}, \Phi^{k+2}\right) \geq \mu$$

$$\mathcal{E}\left(\Phi^k, \Phi^{k+1}\right) = \mathcal{E}\left(\Phi^{k+1}, \Phi^{k+2}\right)$$

$$\mathcal{E}\left(\Phi^k, \Phi^{k+1}\right) - \mathcal{E}\left(\Phi^{k+1}, \Phi^{k+2}\right) \geq 2^{-1}\gamma\left\|D_{\Phi^{k+2}} - D_{\Phi^k}\right\|_2^2$$

$$p^{\tilde{\theta}} - q^{\tilde{\theta}} \geq \frac{\tilde{\theta}}{p^{1-\tilde{\theta}}}(p-q)$$

$$p = \mathcal{E}\left(\Phi^k, \Phi^{k+1}\right) - \mu, q = \mathcal{E}\left(\Phi^{k+1}, \Phi^{k+2}\right) - \mu$$

$$\begin{aligned}&\left(\mathcal{E}\left(\Phi^k, \Phi^{k+1}\right) - \mu\right)^{\tilde{\theta}} - \left(\mathcal{E}\left(\Phi^{k+1}, \Phi^{k+2}\right) - \mu\right)^{\tilde{\theta}} \\ &\geq \frac{\tilde{\theta}}{\left(\mathcal{E}\left(\Phi^k, \Phi^{k+1}\right) - \mu\right)^{1-\tilde{\theta}}}\left(\mathcal{E}\left(\Phi^k, \Phi^{k+1}\right) - \mathcal{E}\left(\Phi^{k+1}, \Phi^{k+2}\right)\right)\end{aligned}$$

$$\left(\mathcal{E}\left(\Phi^k, \Phi^{k+1}\right) - \mathcal{E}\left(\Phi^{k+1}, \Phi^{k+2}\right)\right) \|\varphi_i^k\|, \|\varphi_i^{k+1}\| = 1, 1 \leq i \leq N$$

$$\mathcal{E}\left(\Phi^k, \Phi^{k+1}\right) = f\left(\Phi^k, \Phi^{k+1}, \mathbf{e}^k, \mathbf{e}^{k+1}\right)$$

$$\tilde{\Gamma}_{\gamma,\mu} := \left\{[\Phi, \tilde{\Phi}, \mathbf{e}, \tilde{\mathbf{e}}] : [\Phi, \tilde{\Phi}] \in \Gamma_{\gamma,\mu}, \epsilon_i := \left\langle \varphi_i, \mathcal{F}(\tilde{\Phi})\varphi_i \right\rangle, \tilde{\epsilon}_i := \langle \tilde{\varphi}_i, \mathcal{F}(\Phi)\tilde{\varphi}_i \rangle\right\}$$

$$\left(\bigoplus_{i=1}^{N} H^2(\mathbb{R}^3)\right) \bigoplus \left(\bigoplus_{i=1}^{N} H^2(\mathbb{R}^3)\right) \oplus \mathbb{R}^N \bigoplus \mathbb{R}^N$$

$$\lim_{k\to\infty} \left|\left\langle \varphi_i^k, \mathcal{F}\left(\Phi^{k+1}\right)\varphi_i^k \right\rangle - \left\langle \varphi_i^k, \mathcal{F}\left(\Phi^{k-1}\right)\varphi_i^k \right\rangle\right| = 0$$

$$\epsilon_i^k = \left\langle \varphi_i^k, \mathcal{F}\left(\Phi^{k-1}\right)\varphi_i^k \right\rangle$$

$$\lim_{k\to\infty} \tilde{d}\left([\Phi^k, \Phi^{k+1}, \mathbf{e}^k, \mathbf{e}^{k+1}], \tilde{\Gamma}_{\gamma,\mu}\right) = 0$$

$$d^2 f(z_1, [z_2, z_3]) = d^2 f(z_1, [z_3, z_2]) = \left\langle \langle z_2, F'(z_1) z_3 \rangle \right\rangle = \left\langle \langle z_3, F'(z_1) z_2 \rangle \right\rangle = \left\langle \langle F'(z_1) z_2, z_3 \rangle \right\rangle$$

$$|f(\Phi, \tilde{\Phi}, \mathbf{e}, \tilde{\mathbf{e}}) - \mu|^{1-\theta} \leq \kappa \|F(\Phi, \tilde{\Phi}, \mathbf{e}, \tilde{\mathbf{e}})\|_{Y_2},$$

$$\left|f\left(\Phi^k, \Phi^{k+1}, \mathbf{e}^k, \mathbf{e}^{k+1}\right) - \mu\right|^{1-\tilde{\theta}} \leq \tilde{\kappa} \left\|F\left(\Phi^k, \Phi^{k+1}, \mathbf{e}^k, \mathbf{e}^{k+1}\right)\right\|_{Y_2},$$

$$\|\varphi_i^k\|, \|\varphi_i^{k+1}\| = 1, 1 \leq i \leq N$$

$$\mathcal{F}\left(\Phi^k\right)\varphi_i^{k+1} = \epsilon_i^{k+1}\varphi_i^{k+1}, 1 \leq i \leq N$$

$$\left\|F\left(\Phi^k, \Phi^{k+1}, \mathbf{e}^k, \mathbf{e}^{k+1}\right)\right\|_{Y_2} = \left(\sum_{i=1}^{N} \left\|\mathcal{F}\left(\Phi^{k+1}\right)\varphi_i^k - \epsilon_i^k \varphi_i^k\right\|_{L^2(\mathbb{R}^3)}^2\right)^{1/2}$$

$$\begin{aligned}\left\|F\left(\Phi^k, \Phi^{k+1}, \mathbf{e}^k, \mathbf{e}^{k+1}\right)\right\|_{Y_2} &= \left(\sum_{i=1}^{N} \left\|\mathcal{F}\left(\Phi^{k+1}\right)\varphi_i^k - \mathcal{F}\left(\Phi^{k-1}\right)\varphi_i^k\right\|_{L^2(\mathbb{R}^3)}^2\right)^{1/2} \\ &= \left(\sum_{i=1}^{N} \left\|\mathcal{G}\left(\Phi^{k+1}\right) - \mathcal{G}\left(\Phi^{k-1}\right)\right)\varphi_i^k\right\|_{L^2(\mathbb{R}^3)}^2\right)^{1/2}\end{aligned}$$

$$\left\|D_{\Phi^{k+1}}-D_{\Phi^{k-1}}\right\|_2 \geq \left\|A_{k+1}^{+}\Phi^{k+1}-A_{k-1}^{-}\Phi^{k-1}\right\|_{\oplus_{i=1}^{N} L^2(\mathbb{R}^3)}$$
$$= \left\|\tilde{\Xi}_{+}^{k+1}-\tilde{\Xi}_{-}^{k-1}\right\|_{\oplus_{i=1}^{N} L^2(\mathbb{R}^3)}$$

$$\tilde{\Xi}_{+}^{k+1}:=A_{k+1}^{+}\Phi^{k+1}, \tilde{\Xi}_{-}^{k-1}:=A_{k-1}^{-}\Phi^{k-1}$$

$$\mathcal{G}\left(\Phi^{k+1}\right)=\mathcal{G}\left(\tilde{\Xi}_{+}^{k+1}\right), \mathcal{G}\left(\Phi^{k-1}\right)=\mathcal{G}\left(\tilde{\Xi}_{-}^{k-1}\right)$$

$$\sum_{i=1}^{N} \|\mathcal{G}\left(\Phi^{k+1}\right)-\mathcal{G}\left(\Phi^{k-1}\right)\Bigg)\varphi_i^k\|_{L^2(\mathbb{R}^3)}^2=\sum_{i=1}^{N} \|\mathcal{G}\left(\tilde{\Xi}_{+}^{k+1}\right)-\mathcal{G}\left(\tilde{\Xi}_{-}^{k-1}\right)\Bigg)\varphi_i^k\|_{L^2(\mathbb{R}^3)}^2$$
$$\leq \check{C}\left\|\tilde{\Xi}_{+}^{k+1}-\tilde{\Xi}_{-}^{k-1}\right\|_{\oplus_{i=1}^{N} L^2(\mathbb{R}^3)}^2$$
$$\leq \check{C}\left\|D_{\Phi^{k+1}}-D_{\Phi^{k-1}}\right\|_2^2$$

$$\left|f\left(\Phi^k,\Phi^{k+1},\mathbf{e}^k,\mathbf{e}^{k+1}\right)-\mu\right|^{1-\tilde{\theta}} \leq \tilde{\kappa}\check{C}^{1/2}\left\|D_{\Phi^{k+1}}-D_{\Phi^{k-1}}\right\|_2,$$

$$\left(\mathcal{E}\left(\Phi^k,\Phi^{k+1}\right)-\mu\right)^{\tilde{\theta}}-\left(\mathcal{E}\left(\Phi^{k+1},\Phi^{k+2}\right)-\mu\right)^{\tilde{\theta}}$$
$$\geq \frac{\tilde{\theta}}{\tilde{\kappa}\check{C}^{1/2}\|D_{\Phi^{k+1}}-D_{\Phi^{k-1}}\|_2}\left(2^{-1}\gamma\left\|D_{\Phi^{k+2}}-D_{\Phi^k}\right\|_2^2\right),$$

$$\frac{\tilde{\theta}\gamma}{2\tilde{\kappa}\check{C}^{1/2}}\sum_{k=1}^{\infty}\frac{\alpha_{k+1}^2}{\alpha_k}.$$

$$\sum_{k=1}^{\infty}\alpha_k=\sum_{k=1}^{\infty}\left\|D_{\Phi^{k+1}}-D_{\Phi^{k-1}}\right\|_2$$

$$\left\|\tilde{A}_{k+1}\tilde{\Xi}_{-}^{k+1}-\tilde{A}_{k-1}\tilde{\Xi}_{-}^{k-1}\right\|_{\oplus_{i=1}^{N} L^2(\mathbb{R}^3)}=\left\|\tilde{\Xi}_{+}^{k+1}-\tilde{\Xi}_{-}^{k-1}\right\|_{\oplus_{i=1}^{N} L^2(\mathbb{R}^3)},$$

$$\Xi_{+}^{k+1}=A_{k+1}^{+}(A_{k+1}^{-})^{-1}\Xi_{-}^{k+1}$$

$$\left\|\tilde{\Xi}_{+}^{k+1}-\tilde{\Xi}_{-}^{k-1}\right\|_{\oplus_{i=1}^{N} L^2(\mathbb{R}^3)}$$
$$=\left\|\tilde{A}_{k-1}A_{k+1}^{+}(A_{k+1}^{-})^{-1}\tilde{\Xi}_{-}^{k+1}-\tilde{A}_{k-1}\tilde{\Xi}_{-}^{k-1}\right\|_{\oplus_{i=1}^{N} L^2(\mathbb{R}^3)}$$

$$\tilde{A}_{2k}=A_2^{+}(A_2^{-})^{-1}\cdots A_{2(k-1)}^{+}\left(A_{2(k-1)}^{-}\right)^{-1}A_{2k}^{+}(A_{2k}^{-})^{-1}$$
$$\tilde{A}_{2k+1}=A_3^{+}(A_3^{-})^{-1}\cdots A_{2(k-1)+1}^{+}\left(A_{2(k-1)+1}^{-}\right)^{-1}A_{2k+1}^{+}(A_{2k+1}^{-})^{-1}$$

$$\left\|\Xi^{k+1}-\Xi^{k-1}\right\|_{\oplus_{i=1}^{N} L^2(\mathbb{R}^3)}=\left\|\tilde{\Xi}_{+}^{k+1}-\tilde{\Xi}_{-}^{k-1}\right\|_{\oplus_{i=1}^{N} L^2(\mathbb{R}^3)}$$

$$\mathcal{F}\left(\Phi^k\right)\varphi_i^{k+1}=\epsilon_i^{k+1}\varphi_i^{k+1}, 1\leq i\leq N$$

$$\mathcal{F}\left(\Xi^k\right)\xi_i^{k+1}=\sum_{j=1}^{N}\epsilon_{ij}^{k+1}\xi_j^{k+1}, 1\leq i\leq N$$

$$A_k\left(\mathrm{diag}\left[\epsilon_1^k,\ldots,\epsilon_N^k\right]\right)A_k^{-1}$$

$$\sum_{i,j=1}^{N} \left|\epsilon_{ij}^{k}\right|^2 = \sum_{i=1}^{N} \left|\epsilon_{i}^{k}\right|^2 \leq N|\inf\sigma(h)|^2$$

$$\sum_{k=1}^{\infty} \left\|\Xi^{k+1} - \Xi^{k-1}\right\|_{\oplus_{i=1}^{N} H^2(\mathbb{R}^3)}$$

$$\leq 2\beta_\zeta \sum_{k=1}^{\infty} \left\|\Xi^{k+1} - \Xi^{k-1}\right\|_{\oplus_{i=1}^{N} L^2(\mathbb{R}^3)} + \|\Xi^2 - \Xi^0\|_{\oplus_{i=1}^{N} H^2(\mathbb{R}^3)}$$

$$= 2\beta_\zeta \sum_{k=1}^{\infty} \left\|\tilde{\Xi}_{+}^{k+1} - \tilde{\Xi}_{-}^{k-1}\right\|_{\oplus_{i=1}^{N} L^2(\mathbb{R}^3)} + \|\Xi^2 - \Xi^0\|_{\oplus_{i=1}^{N} H^2(\mathbb{R}^3)}$$

$$\leq 2\beta_\zeta \sum_{k=1}^{\infty} \alpha_k + \|\Xi^2 - \Xi^0\|_{\oplus_{i=1}^{N} H^2(\mathbb{R}^3)} < \infty$$

$$\zeta := N^{1/2}|\inf\sigma(h)|$$

$$\Xi^\infty := \lim_{k\to\infty} \Xi^{2k}\tilde{\Xi}^\infty := \lim_{k\to\infty} \Xi^{2k+1} \bigoplus_{i=1}^{N} H^2(\mathbb{R}^3)$$

$$D_{\Xi^k} = D_{\Phi^k} \lim_{k\to\infty} D_{\Xi^{2k}} = D_{\Xi^\infty}, \lim_{k\to\infty} D_{\Xi^{2k+1}} = D_{\tilde{\Xi}^\infty}$$

$$\|\cdot\|_{\mathcal{L}\left(L^2(\mathbb{R}^3)\right)} \leq \|\cdot\|_2$$

$$\mathcal{F}\left(\Phi^{2k}\right) - \mathcal{F}(\Xi^\infty) = \mathcal{G}\left(\Xi^{2k}\right) - \mathcal{G}(\Xi^\infty)$$

$$P_\Phi = -(2\pi i)^{-1} \oint_g (\mathcal{F}(\Phi) - z)^{-1} dz$$

$$\tilde{\xi}_i^\infty = \lim_{k\to\infty} \xi_i^{2k+1} = \lim_{k\to\infty} P_{\Phi^{2k}} \xi_i^{2k+1} = P_{\Xi^\infty} \tilde{\xi}_i^\infty, 1 \leq i \leq N$$

$$\mathcal{F}(\Xi^\infty)\hat{\varphi}_i^\infty = \hat{\epsilon}_i^\infty \hat{\varphi}_i^\infty, 1 \leq i \leq N$$

$$\mathcal{F}(\Xi^\infty)\tilde{\xi}_i^\infty = \sum_{j=1}^{N} \tilde{\epsilon}_{ij}^\infty \tilde{\xi}_j^\infty, 1 \leq i \leq N$$

$$\mathrm{diag}[\hat{\epsilon}_1^\infty, \dots, \hat{\epsilon}_N^\infty] = A_\infty^{-1}\left(\tilde{\epsilon}_{ij}^\infty\right) A_\infty$$

$$\mathcal{F}(\Xi^\infty) = \mathcal{F}\left(\tilde{\Xi}^\infty\right) = \mathcal{F}\left(\hat{\Phi}^\infty\right)$$

$$\mathcal{F}\left(\hat{\Phi}^\infty\right)\hat{\varphi}_i^\infty = \hat{\epsilon}_i^\infty \hat{\varphi}_i^\infty, 1 \leq i \leq N$$

$$\mathcal{F}\left(\hat{\Phi}^\infty\right) = \mathcal{F}\left(\tilde{\Xi}^\infty\right)$$

$$\mathcal{H}_{\tilde{\Xi}^\infty} = \mathcal{H}_{\Xi^\infty}$$

$$\Xi^\infty = \Theta\tilde{\Xi}^\infty$$

$$\tilde{\varphi}_p(r) = \sum_{q=1}^{N} [e^{\kappa}]_{pq} \varphi_q(r)$$

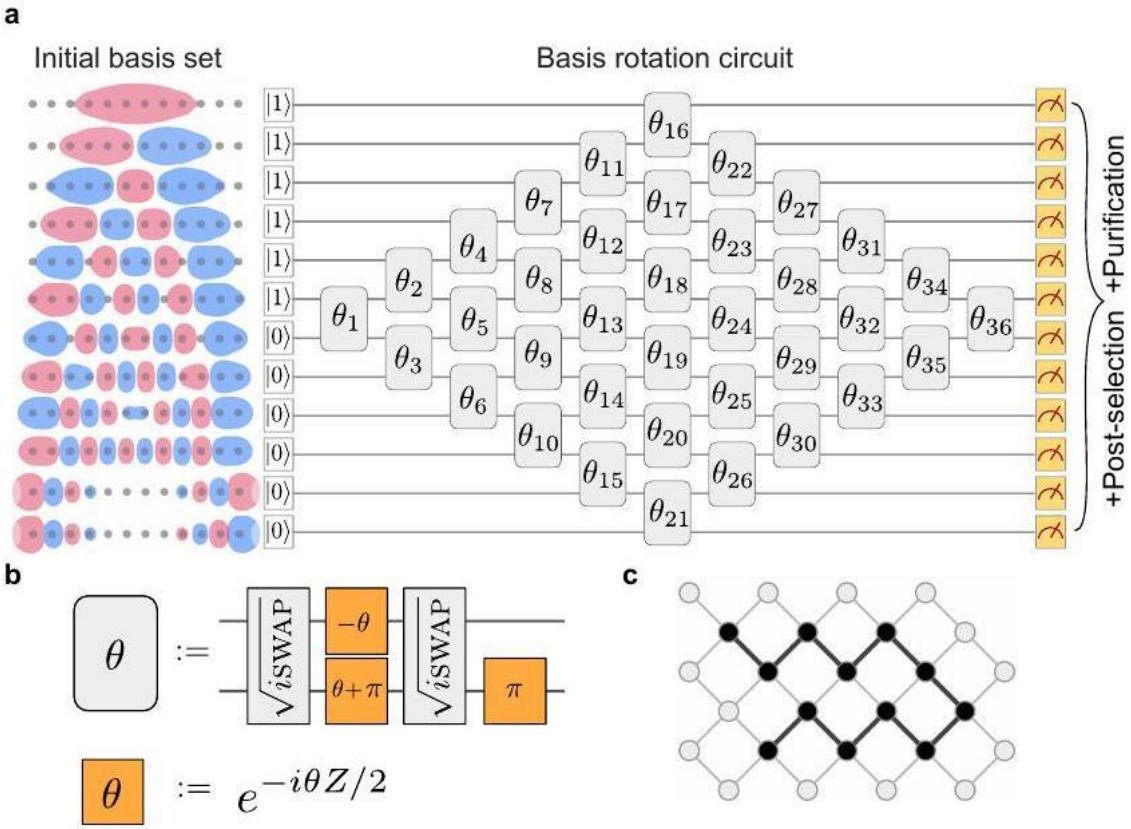

$$|\psi_\kappa\rangle = U_\kappa |\eta\rangle, U_\kappa = \exp\left(\sum_{p,q=1}^{N} \kappa_{pq} a_p^\dagger a_q\right).$$

$$|\psi_{\mathrm{HF}}\rangle = |\psi_{\kappa^\star}\rangle \; \kappa^\star = \mathrm{argmin}_\kappa \langle\psi_\kappa|H|\psi_\kappa\rangle.$$

$$\langle a_p^\dagger a_q^\dagger a_r a_s\rangle = \langle a_p^\dagger a_s\rangle\langle a_q^\dagger a_r\rangle - \langle a_q^\dagger a_s\rangle\langle a_p^\dagger a_r\rangle.$$

$$|\psi(r_1, \dots, r_n)\rangle = (n!)^{-1/2} A_n\big(\chi_1(r_1) \dots \chi_n(r_n)\big)$$

$$\chi_i(r) = \sum_j c_i^j \phi_j(r)$$

$$\langle\delta\psi|H|\psi\rangle = 0$$

$$\langle r \mid \psi\rangle = \langle r| \prod_{i=1}^{n} a_i^\dagger |0\rangle = \frac{1}{\sqrt{n!}} \mathrm{Det}\left[\begin{pmatrix} \chi_1(r_1) & \cdots & \chi_1(r_n) \\ \vdots & \ddots & \vdots \\ \chi_n(r_1) & \cdots & \chi_n(r_n) \end{pmatrix}\right]$$

$$\langle\delta\psi| = \langle\psi|a_i^\dagger a_a \zeta$$

$$\langle\psi|a_i^\dagger a_a H|\psi\rangle = 0$$

$$\left[a_p^\dagger a_q, a_r^\dagger a_s\right] = \delta_{q,r} a_p^\dagger a_s - \delta_{p,s} a_r^\dagger a_s$$

$$\kappa = \sum_{p,q} \kappa_{p,q} a_p^\dagger a_q$$

$$\left[\kappa, a_p^\dagger\right] = a_q^\dagger \kappa_{p,q}\,, \left[\kappa, a_p\right] = a_q \kappa_{p,q}^*$$

$$e^K a_p^\dagger e^{-K} = \sum_q a_q^\dagger u_{q,p}, e^K a_p e^{-K} = \sum_q a_q u_{q,p}^*$$

$$u = e^\kappa$$

$$|\phi(\kappa)\rangle = e^K a_1^\dagger e^{-K} \dots e^K a_n^\dagger e^{-K}|0\rangle = e^K|\psi\rangle.$$

$$E(\kappa) = \langle\phi(\kappa)|H|\phi(\kappa)\rangle = \langle\psi|e^K H e^{-K}|\psi\rangle.$$

$${}^1D_i^j = \langle\phi|a_j^\dagger a_i|\phi\rangle$$

$${}^2D_{ij}^{pq} = \langle\phi|a_p^\dagger a_q^\dagger a_j a_i|\phi\rangle = {}^1D_i^p\,{}^1D_j^q - {}^1D_i^q\,{}^1D_j^p$$

$$E(\kappa) = \sum_{ij} h_{ij}\langle\phi(\kappa)|a_i^\dagger a_j|\phi(\kappa)\rangle + \sum_{ijkl} V_{ijkl}\langle\phi(\kappa)|a_i^\dagger a_j^\dagger a_k a_l|\phi(\kappa)\rangle = \sum_{ij} h_{ij}\,{}^1D_j^i + \sum_{ijkl} V_{ijkl}\,{}^2D_{lk}^{ij}$$

$$h_{i,j} = \int dr\chi_i^*(r)\left(-\nabla^2(r) + \sum_A \frac{Z_A}{|r - R_A|}\right)\chi_j(r)$$

$$V_{l,k}^{i,j} = \frac{1}{2}\iint dr_1 dr_2 \chi_i^*(r_1)\chi_j^*(r_2)(|r_1 - r_2|^{-1})\chi_k(r_2)\chi_l(r_1)$$

$${}^1\tilde{D}_q^p = \langle\phi|e^{-K}a_p^\dagger e^K e^{-K} a_p e^K|\phi\rangle = \langle\phi|\sum_j u_{p,i} a_i^\dagger \sum_{q,j} u_{q,j}^* a_j|\phi\rangle = \sum_{ij} u_{p,i} u_{q,j}^* \langle\phi|a_i^\dagger a_j|\phi\rangle.$$

$$U(e^\kappa) = e^K\, K = \sum_{i,j} \kappa_{i,j} a_i^\dagger a_j\, \kappa^\dagger = -\kappa$$

$$R(u)_{pq} = e^{\log[u]_{pq}\left(a_p^\dagger a_q - a_q^\dagger a_p\right)}$$

$$U(e^\kappa)\cdot U\left(e^{\kappa'}\right) = U\left(e^\kappa \cdot e^{\kappa'}\right)$$

$$R_{pq}(\theta)U(u) = U\left(r_{pq}(\theta)u\right)$$

$$r(\theta)_{p,q} = \begin{pmatrix} 1 & \dots & 0 & \dots & 0 & \dots & 0 \\ \vdots & \ddots & \vdots & & \vdots & & \vdots \\ 0 & \dots & \cos(\theta) & \dots & -\sin(\theta) & \dots & 0 \\ \vdots & & \vdots & & \vdots & & \vdots \\ 0 & \dots & \sin(\theta) & \dots & \cos(\theta) & \dots & 0 \\ \vdots & & \vdots & & \vdots & \ddots & \vdots \\ 0 & \dots & 0 & \dots & 0 & \dots & 1 \end{pmatrix}$$

$$\prod_k R_k(\theta_k)U(u) = \sum_p e^{-i\phi_p a_p^\dagger a_p} = \sum_p e^{-i\phi_p |p\rangle\langle p|}$$

$$|\psi(\kappa)\rangle = \prod_{i=1}^{\eta} \tilde{a}_i^\dagger |\text{vac}\rangle = \prod_{i=1}^{\eta} e^{-K}\tilde{a}_i^\dagger e^{K}|\text{vac}\rangle = \prod_{i=1}^{\eta}\sum_p [e^{\kappa}]_{i,p} a_p^\dagger |\text{vac}\rangle$$

$$\prod_{i=1}^{\eta}\sum_{j=1}^{\eta} V_{i,j}\tilde{a}_i^\dagger|\text{vac}\rangle = \det[V]\prod_{i=1}^{\eta}\tilde{a}_i^\dagger|\text{vac}\rangle$$

$$\langle a_i^\dagger a_i\rangle = \frac{I - \langle Z_i\rangle}{2} = \langle M_i\rangle$$

$$\langle a_i^\dagger a_{i+1} + a_{i+1}^\dagger a_i\rangle = \frac{1}{2}(\langle X_i X_{i+1}\rangle + \langle Y_i Y_{i+1}\rangle) = 2\Re\langle a_i^\dagger a_{i+1}\rangle$$

$$\{\Re(a_1^\dagger a_3 + a_3^\dagger a_1), \Re(a_3^\dagger a_0 + a_0^\dagger a_3), \Re(a_0^\dagger a_5 + a_5^\dagger a_0), \Re(a_5^\dagger a_2 + a_2^\dagger a_5), \Re(a_2^\dagger a_4 + a_4^\dagger a_2)\}.$$

$$\text{FSWAP} = a_p^\dagger a_q + a_q^\dagger a_p - a_p^\dagger a_p - a_q^\dagger a_q.$$

$$U_M \begin{pmatrix} 0 & 0 & 0 & 0 \\ 0 & 0 & 1 & 0 \\ 0 & 1 & 0 & 0 \\ 0 & 0 & 0 & 0 \end{pmatrix} U_M^\dagger = \begin{pmatrix} 0 & 0 & 0 & 0 \\ 0 & 1 & 0 & 0 \\ 0 & 0 & -1 & 0 \\ 0 & 0 & 0 & 0 \end{pmatrix}$$

$$\langle U_m(a_a^\dagger a_{a+1} + a_{a+1}^\dagger a_a)U_m^\dagger\rangle = \left\langle U_m \frac{1}{2}(X_a X_{a+1} + Y_a Y_{a+1})U_m^\dagger\right\rangle = \frac{1}{2}\langle Z_a - Z_{a+1}\rangle = \frac{1}{2}(M_{a+1} - M_a).$$

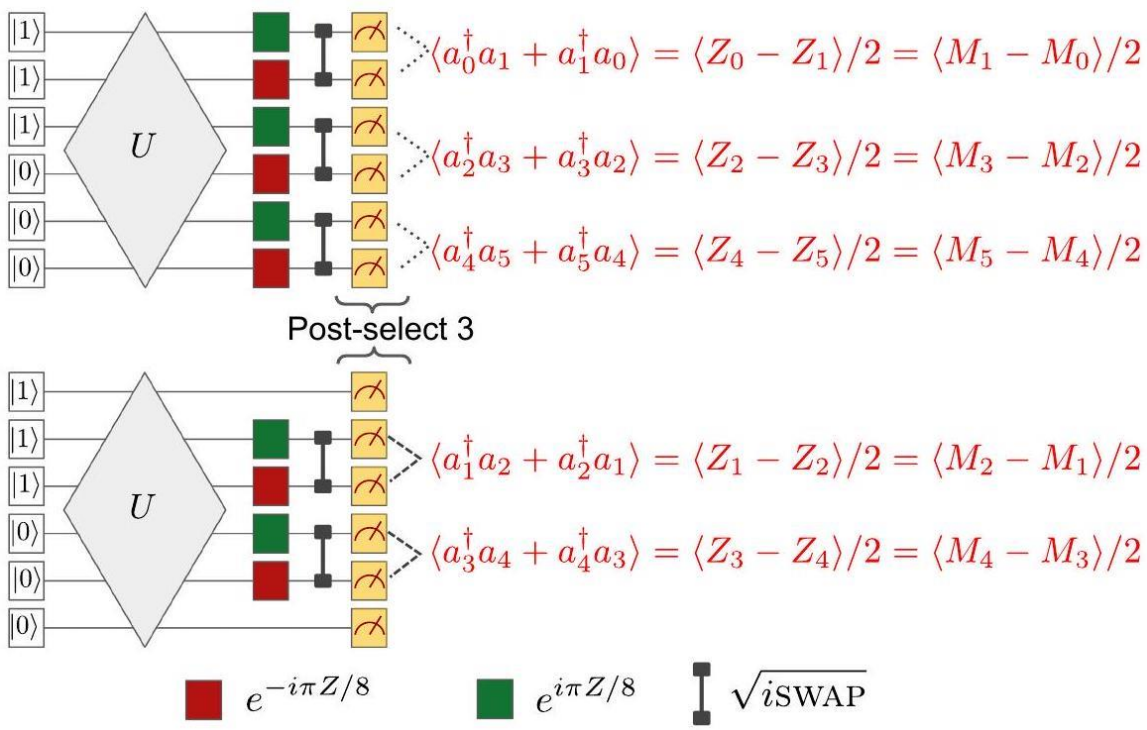

$$\text{Cov}\left[\frac{1}{2}(Z_a - Z_b), \frac{1}{2}(Z_p - Z_q)\right] = \frac{1}{4}(\text{Cov}[Z_a, Z_p] - \text{Cov}[Z_a, Z_q] - \text{Cov}[Z_b, Z_p] + \text{Cov}[Z_b, Z_q])$$

$$\mathrm{Cov}\left[a_i^\dagger a_j + a_j^\dagger a_i, a_p^\dagger a_q + a_q^\dagger a_p\right]_\psi = D_q^i \delta_p^j - D_q^i D_j^p + D_p^i \delta_q^j - D_p^i D_j^q + D_q^j \delta_p^i - D_q^j D_i^p + D_p^j \delta_q^i - D_p^j D_i^q.$$

$$n^{(\omega)} = \sum_{j=1}^{L} \left[(1-\omega_j)n_j + \omega_j(\mathbb{I} - n_j)\right] = \sum_{j=1}^{L} \left[n_j - \omega_j n_j + \omega_j \mathbb{I} - \omega_j n_j\right] = \sum_{j=1}^{L} \left[n_j + \omega_j \mathbb{I} - 2\omega_j n_j\right]$$

$$\mathcal{W} = U(\mathbb{I} - n^\omega)U^\dagger$$

$$\mathrm{Tr}\left[U\rho_p U^\dagger a_i^\dagger a_j\right] = \left[\mathbf{u} D \mathbf{u}^\dagger\right]_{i,j}$$

$$F_{\mathcal{W}}(\rho_p) = 1 - \sum_{j=1}^{L} \left(\left[\mathbf{u}^\dagger \mathbf{D} \mathbf{u}\right]_{j,j} + \omega_j - 2\omega_j \left[\mathbf{u}^\dagger \mathbf{D} \mathbf{u}\right]_{j,j}\right)$$

$$|\langle \psi_u \mid \psi_v \rangle|^2 = \left|\det\left(v^\dagger u\right)\right|^2$$

$$\min_{\mathrm{Tr}[D]=\eta, D\geq 0, D^2=D} \|D - \tilde{D}\|$$

$$D_{n+1} = 3D_n^2 - 2D_n^3$$

$$P_k = 1 + \Delta$$

$$\mathbb{E}(P_{k+1}) = \mathbb{E}\left(3P_k^2 - 2P_k^3\right) = 1 - 3\sigma^2 - 2\mu^3$$

$$\mathbb{E}\left(P_{k+1}^2\right) = 1 - 6\sigma^2 - 4\mu_3 + 9\mu_4 + 12\mu_5 + 4\mu_6$$

$$\mathbb{V}(P_{k+1}) = \mathbb{E}\left(P_{k+1}^2\right) - \mathbb{E}(P_{k+1})^2 = 9(\mu_4 - \sigma^4) + 12(\mu_5 - \sigma^2\mu_3) + 4(\mu_6 - \mu_3^2)$$

$$\mathbb{V}(P_{k+1}) \leq 9\sigma^4(\alpha_4 - 1) + 12|\sigma|^5(\alpha_5 + \alpha_3) + 4|\sigma|^6\alpha_6$$

$$\mathbb{V}(P_{k+1}) \leq 9\sigma^4(\alpha_4 - 1) + 4|\sigma|^5(\alpha_6 + 3\alpha_5 + 3\alpha_3)$$

$$\sigma^2 \leq \frac{1}{9(\alpha_4 - 1)}\left(1 - \frac{\beta\left(-\beta + \sqrt{\beta^2 + 36\alpha_4 - 36}\right)}{18(\alpha_4 - 1)}\right)$$

$$\mathbb{V}(P_{k+1}) \leq 18\sigma^4 + 12\sigma^6$$

$$\sigma^2 \leq \frac{-3}{20} + \frac{\sqrt{564}}{120} \approx 0.048$$

$$|\lambda(\rho) - \lambda(\rho + sE)| \leq s\|E\|$$

$$\mathbb{E}((\lambda(\rho) - \lambda(\rho + E))^2) \leq \mathbb{E}\left(\sum_{i,j} [E^2]_{i,j}\right) \leq M\sigma_M^2$$

$$\mathbb{V}(\lambda(\rho + E)) \leq M\sigma_M^2$$

$$\sigma_M^2 \leq \frac{1}{M}\left(\frac{-3}{20}+\frac{\sqrt{564}}{120}\right)$$

$$\langle \nu(j-1) \mid \lambda(j)\rangle = \frac{1}{R}\frac{\langle \nu(j-1)|E|\lambda(j-1)\rangle}{\nu(j-1)-\lambda(j-1)} + O(1/R^2)$$

$$\begin{aligned}
\sum_{\nu\neq\lambda} |\langle \nu(j-1) \mid \lambda(j)\rangle|^2 &\leq \sum_{\nu\neq\lambda} \frac{1}{R^2}\frac{|\langle \nu(j-1)|E|\lambda(j-1)\rangle|^2}{(\lambda(j-1)-\nu(j-1))^2} + O(1/R^3) \\
&\leq \sum_{\nu\neq\lambda} \frac{1}{\gamma^2(j-1)R^2} |\langle \nu(j-1)|E|\lambda(j-1)\rangle\Big|^2 + O(1/R^3) \\
&= \sum_{\nu\neq\lambda} \frac{1}{\gamma^2(j-1)R^2} \langle \lambda(j-1)|E|\nu(j-1)\rangle\langle \nu(j-1)|E|\lambda(j-1)\rangle\Big|^2 + O(1/R^3) \\
&= \frac{1}{\gamma^2(j-1)R^2}(\langle \lambda(j-1)|E^2|\lambda(j-1)\rangle - (\langle \lambda(j-1)|E|\lambda(j-1)\rangle)^2) + O(1/R^3) \\
&\leq \frac{\|E^2\|}{\gamma^2(j-1)R^2} + O(1/R^3)
\end{aligned}$$

$$|\langle \lambda(j-1) \mid \lambda(j)\rangle - 1|^2 \leq \frac{\|E^2\|}{\gamma^2(j-1)R^2} + O(1/R^3)$$

$$||\lambda(j)\rangle - |\lambda(j-1)\rangle\Big| \leq \frac{\sqrt{2\|E^2\|}}{\gamma(j-1)R} + O(1/R^2)$$

$$||\lambda(R)\rangle - |\lambda(0)\rangle\Big| \leq \sum_{j=1}^{R} \Big||\lambda(j)\rangle - |\lambda(j-1)\rangle\Big| \leq \sum_{j=1}^{R} \frac{\sqrt{2\|E^2\|}}{\gamma(j-1)R} + O(1/R)$$

$$\lim_{R\to\infty} \sum_{j=1}^{R} \frac{\sqrt{2\|E^2\|}}{\gamma(j-1)R} + O(1/R) \leq \frac{\sqrt{2\|E^2\|}}{\gamma_{\min}} = \frac{\sqrt{2}\|E\|}{\gamma_{\min}}.$$

$$\gamma_{\min} \geq 1 - 2\|E\|$$

$$\|\lambda(\rho)\rangle - |\lambda(\rho+E)\rangle\,| \leq \sqrt{2}\|E\|(1+4\|E\|) \leq 2\sqrt{2}\|E\|$$

$$\mathbb{V}||\lambda(\rho)\rangle - |\lambda(\rho+E)\rangle\,| \leq 8M\sigma_M^2$$

$$\sigma_M^2 = \frac{\epsilon^2}{8M}$$

$$\mathbb{V}(\|E\|) \leq M\sigma_M^2$$

$$P \leq 16M\sigma_M^2 \sim 2\epsilon^2$$

$$\sqrt{i\mathrm{SWAP}} \approx \begin{pmatrix} 1 & 0 & 0 & 0 \\ 0 & \frac{1}{\sqrt{2}} & \frac{i}{\sqrt{2}} & 0 \\ 0 & \frac{i}{\sqrt{2}} & \frac{1}{\sqrt{2}} & 0 \\ 0 & 0 & 0 & e^{i\pi/24} \end{pmatrix} = \mathrm{CPHASE}(\pi/24)\sqrt{i\mathrm{SWAP}}$$

$$U_1 = \mathrm{diag}\left(1,1,1,e^{-i\phi}\right)\sqrt{i\mathrm{SWAP}}$$

$$U_2 = \mathrm{diag}\left(1,e^{i\phi/2},e^{i\phi/2},1\right)\sqrt{i\mathrm{SWAP}}.$$

$$\mathrm{diag}\left(1,1,1,e^{-i\phi}\right) \approx e^{-i\phi} \times \left(II + \frac{i\phi}{4}IZ + \frac{i\phi}{4}ZI - \frac{i\phi}{4}ZZ\right),$$

$$\mathrm{Err}_1 \approx 3\left(\frac{\phi}{4}\right)^2 = \frac{3}{16}\phi^2.$$

$$\mathrm{diag}\left(1,e^{i\phi/2},e^{i\phi/2},1\right) \approx e^{i\phi/4}\left(II - \frac{i\phi}{4}ZZ\right)$$

$$\mathrm{Err}_2 \approx \frac{1}{16}\phi^2.$$

$$\mathrm{Rz}(\theta,\delta\alpha) = e^{-iZ\theta(1+\delta\alpha)/2}$$

$$G(\theta,\delta\alpha) = e^{\theta(1+\delta\alpha)\left(a_i^\dagger a_j - a_j^\dagger a_i\right)}$$

$$G(\theta) = \sqrt{i\mathrm{SWAP}_{i,j}}^{\dagger} e^{-i\theta(1+\delta\alpha)Z_i/2} e^{i\theta(1+\delta\alpha)Z_j/2} \sqrt{i\mathrm{SWAP}_{i,j}}$$

$$G(-\theta,\delta\alpha,i,j)a_r^\dagger G(\theta,\delta\alpha,i,j) = \begin{cases} a_i^\dagger \cos\left(\theta(1+\delta\alpha)\right) + a_j^\dagger \sin\left(\theta(1+\delta\alpha)\right) & \text{if } r = i \\ a_j^\dagger \cos\left(\theta(1+\delta\alpha)\right) - a_i^\dagger \sin\left(\theta(1+\delta\alpha)\right) & \text{if } r = j \\ a_r^\dagger & \text{if } r \neq i \& r \neq j \end{cases}$$

$$G(-\theta,\delta\alpha,i,j)a_s G(\theta,\delta\alpha,i,j) = \begin{cases} a_i \cos\left(\theta(1+\delta\alpha)\right) + a_j \sin\left(\theta(1+\delta\alpha)\right) & \text{if } s = i \\ a_j \cos\left(\theta(1+\delta\alpha)\right) - a_i \sin\left(\theta(1+\delta\alpha)\right) & \text{if } s = j \\ a_s & \text{if } s \neq i \& s \neq j \end{cases}$$

$$\rho(\delta\alpha) = \frac{1}{\sigma\sqrt{2\pi}} e^{-\frac{(\delta\alpha)^2}{2\sigma^2}}$$

$$\int_{\infty}^{\infty} \rho(\delta\alpha,\sigma)G(-\theta,\delta\alpha,i,j)a_r^\dagger G(\theta,\delta\alpha,i,j)d\delta\alpha = \begin{cases} a_i^\dagger \cos(\theta)e^{-\frac{\theta^2\sigma^2}{2}} + a_j^\dagger \sin(\theta)e^{-\frac{\theta^2\sigma^2}{2}} & \text{if } r = i \\ a_j^\dagger \cos(\theta)e^{-\frac{\theta^2\sigma^2}{2}} - a_i^\dagger \sin(\theta)e^{-\frac{\theta^2\sigma^2}{2}} & \text{if } r = j \\ a_r^\dagger & \text{if } r \neq i \& r \neq j \end{cases}$$

$$\int_{\infty}^{\infty} \rho(\delta\alpha,\sigma)G(-\theta,\delta\alpha,i,j)a_s G(\theta,\delta\alpha,i,j)d\delta\alpha = \begin{cases} a_i \cos(\theta)e^{-\frac{\theta^2\sigma^2}{2}} + a_j \sin(\theta)e^{-\frac{\theta^2\sigma^2}{2}} & \text{if } s = i \\ a_j \cos(\theta)e^{-\frac{\theta^2\sigma^2}{2}} - a_i \sin(\theta)e^{-\frac{\theta^2\sigma^2}{2}} & \text{if } s = j \\ a_s & \text{if } s \neq i \& s \neq j \end{cases}$$

$$Z = \sum_{i<b} c_{b,i}\left(a_b^\dagger a_i - a_i^\dagger a_b\right)$$

$$\frac{dE}{dc_{b,i}} = \langle\phi_0|\frac{de^{-Z}}{dc_{b,i}} H e^Z|\phi_0\rangle + \langle\phi_0|e^{-Z} H \frac{de^Z}{dc_{b,i}}|\phi_0\rangle$$

$$\frac{dE}{dc_{b,i}} = \langle\phi_0|e^{-Z}\left[H, \nabla f(Z)_{c_{b,i}}\right]e^Z|\phi_0\rangle$$

$$U\left(c_{b,i}\right) = e^{\sum_{b,i} c_{b,i}E_{b,i}^-} = e^{\sum_{b,i} c_{b,i}\left(a_b^\dagger a_i - a_i^\dagger a_b\right)}.$$

$$\frac{dU(\mathbf{c})}{dc_{b,i}} = \left[\int_0^1 dx e^{x\sum_{b,i} c_{b,i}E_{b,i}^-} E_{b,i}^- e^{-x\sum_{b,i} c_{b,i}E_{b,i}^-}\right] e^{\sum_{b,i} c_{b,i}E_{b,i}^-}$$

$$\mathrm{ad}\left(\sum_{b',i'} c_{b',i'}E_{b',i'}^-\right)^n \left(E_{b,i}^-\right)$$

$$i\mathbf{C} = i\sum_r \lambda_r \tilde{a}_r^\dagger \tilde{a}_r$$

$$\tilde{a}_p = \sum_q u_{p,q}^* a_q, \tilde{a}_p^\dagger = \sum_q u_{p,q} a_q^\dagger$$

$$\mathbf{Y} = \sum_{k,l} Y_{kl}\tilde{a}_k^\dagger \tilde{a}_l$$

$$Y_{kl} = \left(U^\dagger E_{b,i}^- U\right)_{k,l}$$

$$\mathrm{ad}\left(\sum_{b',i'} c_{b',i'}E_{b',i'}^-\right)\left(E_{b,i}^-\right) = \sum_{rkl} i\lambda_r Y_{kl}\left[\tilde{a}_r^\dagger \tilde{a}_r, \tilde{a}_k^\dagger \tilde{a}_l\right]$$

$$= \sum_{rkl} i\lambda_r Y_{kl}\left(\tilde{a}_r^\dagger \tilde{a}_l \delta_k^r - \tilde{a}_k^\dagger \tilde{a}_r \delta_r^l\right)$$

$$= i\sum_{kl} (\lambda_k - \lambda_l) Y_{kl}\tilde{a}_k^\dagger \tilde{a}_l$$

$$\mathrm{ad}\left(\sum_{b',i'} c_{b',i'}E_{b',i'}^-\right)^n \left(E_{b,i}^-\right) = i^n \sum_{kl} (\lambda_k - \lambda_l)^n Y_{kl}\tilde{a}_k^\dagger \tilde{a}_l$$

$$\frac{dU(\mathbf{c})}{dc_{b,i}} = \left[\sum_{kl} Y_{kl}\frac{e^{i(\lambda_k-\lambda_l)} - 1}{i(\lambda_k - \lambda_l)}\tilde{a}_k^\dagger \tilde{a}_l\right] e^{\sum_{b,i} c_{b,i}E_{b,i}^-}$$

$$= \left(\sum_{k,l} \left[UMU^\dagger\right]_{kl} a_k^\dagger a_l\right) e^{\sum_{b,i} c_{b,i}E_{b,i}^-}$$

$$M_{kl} = Y_{kl}\frac{e^{i(\lambda_k-\lambda_l)} - 1}{i(\lambda_k - \lambda_l)}$$

$$\delta\tilde{E} = \delta\langle\tilde{\psi}|H|\tilde{\psi}\rangle = 0$$

$$U = e^{R}\, R = -R^{\dagger}$$

$$\tilde{E} \to \tilde{E}' = \tilde{E} + \langle\tilde{\psi}|[H,R]|\tilde{\psi}\rangle + \frac{1}{2}\langle\tilde{\psi}|[[H,R],R]|\tilde{\psi}\rangle + \cdots$$

$$\langle\tilde{\psi}|[H,R]|\tilde{\psi}\rangle = 0\ \forall R = -R^{\dagger}$$

$$A_R = \langle\phi|[H,R]|\phi\rangle \neq 0$$

$$\psi = e^{-f_R R}\phi$$

$$E_{f_R} = \langle\phi|e^{f_R R} H e^{-f_R R}|\phi\rangle \approx \langle\phi|H + f_R[H,R] + \frac{f_R^2}{2}[[H,R],R]|\phi\rangle$$

$$\frac{dE_{f_R}}{df_R} = \langle\phi|[H,R] + \frac{f_R}{2}[[H,R],R]|\phi\rangle = 0\ f_R = -A_R/B_{R,R}\ B_{R,R} = \langle\phi|[[H,R],R]|\phi\rangle$$

$$0 = \langle\phi|e^{f_R R}[H,R]e^{-f_R R}|\phi\rangle = \langle\phi|[H,R] + f_R[[H,R],R] + \frac{f_R^2}{2}[[[H,R],R],R] + \cdots|\phi\rangle$$

$$f_R = -A_R/B_{R,R}$$

$$R = \sum_k c_k X, X \subset \mathcal{L}$$

$$0 \approx \langle\phi|[H,X_k] + \sum_l \left[[H,X_k],X_l\right]c_l|\phi\rangle$$

$$A_{p,q} = \langle\psi|\left[H,a_{p,q}\right]|\psi\rangle\ B_{p,q;r,s} = \langle\psi|\left[\left[H,a_p^{\dagger}a_q\right],a_r^{\dagger}a_s\right]|\psi\rangle.$$

$$\begin{pmatrix} 0 & \mathbf{A} \\ \mathbf{A}^{\dagger} & \mathbf{B} \end{pmatrix}\begin{pmatrix} 1 \\ f_{p,q} \end{pmatrix} = \epsilon\begin{pmatrix} 1 \\ f_{p,q} \end{pmatrix}$$

$$\mathbf{A} + (\mathbf{B} - \epsilon)f_{p,q} = 0$$

$$\begin{cases} f_{p,q} & \max\left(f_{p,q}\right) < \gamma \\ \dfrac{\gamma}{\max\left(f_{p,q}\right)} f_{p,q} & \max\left(f_{p,q}\right) \geq \gamma \end{cases}$$

$$i\partial_t\gamma = [-\Delta + w * \rho + \mathcal{X}, \gamma]$$

$$i\partial_t X = -\Delta X + (w * \mathbb{E}[|X|^2])X - \int_{\mathbb{R}^d} w(x-y)\mathbb{E}[\overline{X(y)}X(x)]X(y)dy$$

$$i\partial_t X = -\Delta X + (w * \mathbb{E}[|X|^2])X,)$$

$$i\partial_t\gamma = [-\Delta + w * \rho, \gamma]$$

$$X(t,x,\omega) = f(\omega)e^{ix\xi - it\xi^2}$$

$$\mathrm{Tr}(\langle\nabla\rangle\gamma_0) + \mathrm{Tr}(\langle x\rangle\gamma_0) \leq \varepsilon,$$

$$\left\|\gamma(t) - e^{it\Delta}\gamma_\infty\right\|_{\mathbb{S}^1} \leq t^{-\delta}$$

$$\left\|\hat{X}(t) - e^{-it\xi^2}\hat{W}\right\|_{H_\xi^{\theta,0}\cap H_\xi^{0,\theta},L_\omega^2\cap L_\xi^\infty,L_\omega^2} \leq t^{-\delta}$$

$$\hat{f}(\xi) = \mathcal{F}f(\xi) = (2\pi)^{-\frac{1}{2}}\int_{\mathbb{R}} e^{-ix\xi}f(x)dx$$

$$\langle x\rangle^l\langle\nabla\rangle^m L^p\left(\mathbb{R}, L^2\left(\mathbb{R}^d, L^2(\Omega)\right)\right),$$

$$\|u\|_{L_t^p H_x^{m,l} L_\omega^2} = \left\|\langle x\rangle^l\langle\nabla\rangle^m u\right\|_{L_t^p L_x^2 L_\omega^2},$$

$$|x|^l|\nabla|^m L^p\left(\mathbb{R}, L^2\left(\mathbb{R}^d, L^2(\Omega)\right)\right),$$

$$\|u\|_{L_t^p \dot{H}_x^{m,l} L_\omega^2} = \left\||x|^l|\nabla|^m u\right\|_{L_t^p L_x^2 L_\omega^2},$$

$$A(t,x,\omega) \leq CB(t,x,\omega)$$

$$|f\rangle\langle g|(v)(x) = \int \overline{g(y)}v(y)dyf(x)$$

$$\|X\|_{X_T} := \left\|t^{\frac{1}{2}}X\right\|_{L_T^\infty,L_x^\infty,L_\omega^2} + \|t^{-\alpha}X\|_{L_T^\infty,\dot{H}_x^{1,0},L_\omega^2} + \|t^{-\alpha}Z\|_{L_T^\infty,\dot{H}_x^{0,1},L_\omega^2} + \|X\|_{L_T^\infty,L_x^2,L_\omega^2}$$

$$\mathcal{X}_T := \left\{X \in L_T^\infty, L_x^\infty, L_\omega^2 \cap C\left(\mathbb{R}, H_x^{1,0}, L_\omega^2 \cap H_x^{0,1}, L_\omega^2\right), \|X\|_{X_T} < \infty\right\}$$

$$\|X\|_{X_T} \leq \varepsilon + C_1\|X\|_{X_T}^3$$

$$\left\|e^{it\Delta}g\right\|_{L^\infty(\mathbb{R}^n)} \lesssim \frac{1}{t^{n/2}}\|\hat{g}\|_{L^\infty(\mathbb{R}^n)} + \frac{1}{t^{\frac{n}{2}+2\beta}}\|g\|_{H^{0,\gamma}(\mathbb{R}^n)}$$

$$X(t) = e^{i(t-1)\Delta}X_0 + e^{it\Delta}C(X,X,X)$$

$$C(X,X,X) = -i\int_1^t e^{-is\Delta}\left((w * \mathbb{E}[|X(s)|^2])X(s) - \int w(x-y)\mathbb{E}[\overline{X(s,y)}X(s,x)]X(s,y)dy\right)ds$$

$$\hat{Z}(t,\xi) = \hat{X}_0(\xi) + \hat{C}(X,X,X)(\xi)$$

$$\hat{C}(X,X,X) = I_1 + I_2,$$

$$I_1 = -i\mathcal{F}_x\left(\int_1^t dse^{-is\Delta}(w * \mathbb{E}[|X(s)|^2])X(s)\right)\Bigg)$$

$$I_2 = i\mathcal{F}_x\left(\int_1^t dse^{-is\Delta}\int dyw(x-y)\mathbb{E}[\overline{X(s,y)}X(s,x)]X(s,y)dy\right)$$

$$I_1 = \frac{-i}{\sqrt{2\pi}} \int_1^t ds e^{is\xi^2} (\mathcal{F}_x(w * \mathbb{E}[|X(s)|^2]) * \mathcal{F}_x(X(s))$$

$$I_1 = -i \int_1^t ds e^{is\xi^2} \int d\eta \hat{w}(\eta) \mathcal{F}_x(\mathbb{E}[|X(s)|^2])(\eta) \hat{X}(s, \xi - \eta)$$

$$I_1 = \frac{-i}{\sqrt{2\pi}} \int_1^t ds e^{is\xi^2} \int d\eta \hat{w}(\eta) \mathbb{E}\left[\int d\sigma \overline{\hat{X}(s, \sigma - \eta)} \hat{X}(s, \sigma)\right] \hat{X}(s, \xi - \eta)$$

$$I_1 = \frac{-i}{\sqrt{2\pi}} \int_1^t ds e^{is\xi^2} \int d\eta d\sigma \hat{w}(\eta) \mathbb{E}\left[e^{is(\eta-\sigma)^2} \hat{\hat{Z}}(s, \sigma - \eta) e^{-is\sigma^2} \hat{Z}(\sigma)\right] e^{-is(\xi-\eta)^2} \hat{Z}(\xi - \eta)$$

$$I_1 = \frac{-i}{\sqrt{2\pi}} \int_1^t ds \int d\eta d\sigma e^{2is\eta(\xi-\sigma)} \hat{w}(\eta) \mathbb{E}[\overline{\hat{Z}(s, \sigma - \eta)} \hat{Z}(\sigma)] \hat{Z}(\xi - \eta)$$

$$I_2 = i \int_0^t ds e^{-is\xi^2} \mathcal{F}_x(w * (\mathbb{E}[\overline{X(s,\cdot)} X(s,x)] X(s,\cdot)))$$

$$\mathcal{F}_x(w * (\mathbb{E}[\overline{X(s,\cdot)} X(s,x)] X(s,\cdot))) = \int dx e^{-i\xi x} \int dy w(x-y) \mathbb{E}[\overline{X(s,y)} X(s,x)] X(s,y)$$

$$\mathcal{F}_x(w * (\mathbb{E}[\overline{X(s,\cdot)} X(s,x)] X(s,\cdot)))$$

$$= \frac{1}{\sqrt{2\pi}} \int dy dx e^{-i\xi x} w(x-y) \mathbb{E}\left[\overline{X(s,y)} \int d\eta e^{i\eta x} \hat{X}(s,\eta)\right] X(s,y)$$

$$I_2 = \frac{i}{\sqrt{2\pi}} \int_1^t ds \int d\eta d\sigma e^{2is\eta(\xi-\sigma)} \hat{w}(\eta) \mathbb{E}[\overline{\hat{Z}(s, \sigma - \eta)} \hat{Z}(\xi - \eta)] \hat{Z}(\sigma)$$

$$\hat{C} = \frac{-i}{\sqrt{2\pi}} \int_1^t ds \int d\eta d\sigma e^{2is\eta(\xi-\sigma)} \hat{w}(\eta) (\mathbb{E}[\overline{\hat{Z}(s, \sigma - \eta)} \hat{Z}(\sigma)] \hat{Z}(\xi - \eta) - \mathbb{E}[\overline{\hat{Z}(s, \sigma - \eta)} \hat{Z}(\xi - \eta)] \hat{Z}(\sigma))$$

$$\hat{Z}(t, \xi) = \hat{X}_*(\xi) + \int_1^s R(s, \xi) ds$$

$$R(s, \xi) = \frac{-i}{\sqrt{2\pi}} \int dx dy \frac{1}{2s} \left(e^{\frac{ixy}{2s}} - 1\right) \mathcal{F}_{\eta,\sigma}^{-1}(F)(s, x, y, \xi)$$

$$F(s, \eta, \sigma, \xi) = \hat{w}(\eta) (\mathbb{E}[\overline{\hat{Z}(s, \xi - \sigma - \eta)} \hat{Z}(\xi - \sigma)] \hat{Z}(\xi - \eta) - \mathbb{E}[\overline{\hat{Z}(s, \xi - \sigma - \eta)} \hat{Z}(\xi - \eta)] \hat{Z}(\xi - \sigma))$$

$$\hat{C}(X, X, X) = \frac{-i}{\sqrt{2\pi}} \int_1^t ds \int dx dy \mathcal{F}_{\eta,\sigma}\left(e^{2is\eta\sigma}\right)(x, y) \mathcal{F}_{\eta,\sigma}^{-1}(F)(s, x, y, \xi)$$

$$\hat{C}(X,X,X) = \frac{-i}{\sqrt{2\pi}} \int_1^t ds \int \; dxdy \frac{1}{2s} e^{\frac{ixy}{2s}} \mathcal{F}_{\eta,\sigma}^{-1}(F)(s,x,y,\xi)$$

$$\int \; dxdy \mathcal{F}_{\eta,\sigma}^{-1}(F)(s,x,y,\xi) = 0$$

$$\hat{C}(X,X,X) = \frac{-i}{\sqrt{2\pi}} \int_1^t ds \int \; dxdy \frac{1}{2s} \left(e^{\frac{i\eta\sigma}{2s}} - 1 \right) \mathcal{F}_{\eta,\sigma}^{-1}(F)(s,x,y,\xi)$$

$$\hat{Z} = \hat{X}_* + \int_1^t R(s,\xi) ds$$

$$R(s,\xi) = \frac{-i}{\sqrt{2\pi}} \int \; dxdy \frac{1}{2s} \left(e^{\frac{i\eta\sigma}{2s}} - 1 \right) \mathcal{F}_{\eta,\sigma}^{-1}(F(s,\eta,\sigma,\xi))(x,y)$$

$$\hat{Z}(t,\xi) = \hat{X}_*(\xi) + \int_1^s R(s,\xi) ds$$

$$\|R(s,\xi)\|_{L^2_\omega} \lesssim s^{-1-\delta+3\alpha} \|X\|_{X_T}^3$$

$$|R(s,\xi)| \lesssim s^{-1-\delta} \int \; dxdy |x|^\delta |y|^\delta \left| \mathcal{F}_{\eta,\sigma}^{-1}(F)(s,x,y,\xi) \right|$$

$$F(s,\eta,\sigma,\xi) = \hat{w}(\eta)(F_1(s,\eta,\sigma,\xi) - F_2(s,\eta,\sigma,\xi))$$

$$F_1(s,\eta,\sigma,\xi) = \mathbb{E}[\hat{Z}(s,\xi-\sigma-\eta)\hat{Z}(\xi-\sigma)]\hat{Z}(\xi-\eta)$$

$$F_2(s,\eta,\sigma,\xi) = \mathbb{E}[\hat{Z}(s,\xi-\sigma-\eta)\hat{Z}(\xi-\eta)]\hat{Z}(\xi-\sigma)$$

$$\mathcal{F}_{\eta,\sigma}^{-1}(F_1) = \mathcal{F}_\eta^{-1}\left(\mathbb{E}\left[\mathcal{F}_\sigma^{-1}(\overline{\hat{Z}(s,\xi-\sigma-\eta)}\hat{Z}(\xi-\sigma)) \right] \hat{Z}(\xi-\eta) \right).$$

$$\mathcal{F}_\sigma^{-1}(\overline{\hat{Z}(s,\xi-\sigma-\eta)}\hat{Z}(\xi-\sigma)) = \sqrt{2\pi}\mathcal{F}_\sigma^{-1}(\overline{\hat{Z}(s,\xi-\sigma-\eta)}) * \mathcal{F}_\sigma^{-1}(\hat{Z}(\xi-\sigma))$$

$$\mathcal{F}_\sigma^{-1}(\overline{\hat{Z}(s,\xi-\sigma-\eta)})(x) = e^{ix(\xi-\eta)}\overline{Z(x)}$$

$$\mathcal{F}_\sigma^{-1}(\hat{Z}(\xi-\sigma))(x) = e^{ix\xi}Z(-x)$$

$$\mathcal{F}_\sigma^{-1}(\overline{\hat{Z}(s,\xi-\sigma-\eta)}\hat{Z}(\xi-\sigma))(x) = \sqrt{2\pi}e^{i\xi x} \int \; dx' e^{-ix'\eta} Z(x'-x)\bar{Z}(x')$$

$$\mathcal{F}_{\eta,\sigma}^{-1}(F_1) = \sqrt{2\pi}\mathcal{F}_\eta^{-1}\left(\mathbb{E}\left[e^{i\xi x} \int \; dx' e^{-ix'\eta} Z(x'-x)\bar{Z}(x') \right] \hat{Z}(\xi-\eta) \right)$$

$$\mathcal{F}_\eta^{-1}\left(e^{-ix'\eta}\hat{Z}(\xi-\eta)\right)(y) = e^{i\xi(y+x')}Z(x'-y),$$

$$\mathcal{F}_{\eta,\sigma}^{-1}(F_1) = \sqrt{2\pi}e^{i\xi(x+y)} \int \; dx' e^{-ix'\xi} \mathbb{E}[Z(x'-x)\bar{Z}(x')]Z(x'-y)$$

$$\mathcal{F}_{\eta,\sigma}^{-1}(F_2) = \sqrt{2\pi}e^{i\xi(x+y)} \int \; dy' e^{-iy'\xi} \mathbb{E}[Z(y'-y)\bar{Z}(y')]Z(y'-x)$$

$$\left\|\mathcal{F}_{\eta,\sigma}^{-1}(F_1)(s,\eta,\sigma,\xi)\right\|_{L^2_\omega} \lesssim \int dx' \|Z(x'-x)\|_{L^2_\omega} \|Z(x')\|_{L^2_\omega} \|Z(x'-y)\|_{L^2_\omega}$$

$$\left\|\mathcal{F}_{\eta,\sigma}^{-1}(F_2)(s,\eta,\sigma,\xi)\right\|_{L^2_\omega} \lesssim \int dy' \|Z(y'-y)\|_{L^2_\omega} \|Z(y')\|_{L^2_\omega} \|Z(y'-x)\|_{L^2_\omega}$$

$$\|R(s,\xi)\|_{L^2_\omega} \lesssim s^{-1-\delta} \int d\eta d\sigma |\eta|^\delta |\sigma|^\delta \left\|\mathcal{F}_{\eta,\sigma}^{-1}(F)(s,\eta,\sigma,\xi)\right\|_{L^2_\omega}$$

$$\|R(s,\xi)\|_{L^2_\omega} \lesssim s^{-1-\delta} \int dxdydz |x|^\delta |y|^\delta \|Z(z-y)\|_{L^2_\omega} \|Z(z)\|_{L^2_\omega} \|Z(z-x)\|_{L^2_\omega}$$

$$|x|^\delta |y|^\delta \lesssim \left(|z-x|^\delta + |z|^\delta\right)\left(|z-y|^\delta + |z|^\delta\right)$$

$$\|R(s,\xi)\|_{L^2_\omega} \lesssim s^{-1-\delta} \left\|\langle x\rangle^{2\delta} Z\right\|^2_{L^1_x, L^2_\omega} \|Z\|_{L^1_x, L^2_\omega}$$

$$\|R(s,\xi)\|_{L^2_\omega} \lesssim s^{-1-\delta} \|Z\|^3_{H^{0,1}_x, L^2_\omega} \lesssim s^{-1-\delta-3\alpha} \|X\|^3_{X_T},$$

$$\frac{d}{dt}\|X\|^2_{L^2_{x,\omega}} = 2\mathrm{Im}\left\langle \int_{\mathbb{R}^d} w(x-y)\mathbb{E}[\overline{X(y)}X(\cdot)]X(y)dy, X\right\rangle_{L^2_{x,\omega}}$$

$$\left\langle \int_{\mathbb{R}^d} w(x-y)\mathbb{E}[\overline{X(y)}X(\cdot)]X(y)dy, X\right\rangle_{L^2_{x,\omega}} = \int dxdyd\omega w(x-y)\mathbb{E}[\overline{X(y)}X(x)]X(y,\omega)\overline{X(x,\omega)}$$

$$\left\langle \int_{\mathbb{R}^d} w(x-y)\mathbb{E}[\overline{X(y)}X(\cdot)]X(y)dy, X\right\rangle_{L^2_{x,\omega}} = \int dxdyw(x-y)\mathbb{E}[\overline{X(y)}X(x)]\mathbb{E}[X(y)\overline{X(x)}] \in \mathbb{R}$$

$$\left\|\partial_x \int_1^t e^{-is\Delta}\left((w * \mathbb{E}[|X(s)|^2])X(s)ds\right\|_{L^2_{x,\omega}} \leq \int_0^t \left\|w\right\|_{L_1} \|\partial_x(\mathbb{E}[|X(s)|^2]X(s))\|_{L^2_{x,\omega}} ds$$

$$\left\|\partial_x \int_1^t e^{-is\Delta}\left((w * \mathbb{E}[|X(s)|^2])X(s)ds\right\|_{L^2_{x,\omega}} \lesssim \int_0^t \left\|X(s)\right\|^2_{L^\infty_x, L^2_\omega} \left\|\partial_x X(s)\right\|_{L^2_{x,\omega}} ds$$

$$\left\|\partial_x \int_1^t e^{-is\Delta}\left((w * \mathbb{E}[|X(s)|^2])X(s)ds\right\|_{L^2_{x,\omega}} \lesssim \int_1^t s^{\alpha-1} \left\|X\right\|^3_{X_T} ds \lesssim t^\alpha \|X\|^3_{X_T}$$

$$\int_1^t e^{-is\Delta}\left(\int w(x-y)\mathbb{E}[\overline{X(s,y)}X(s,x)]X(s,y)dy\right)ds = \int_1^t e^{-is\Delta}(w * \mathbb{E}[\overline{X(s,\cdot)}X(s,x)]X(s,\cdot))ds$$

$$\left\|\partial_x \int_1^t e^{-is\Delta}\left(\int w(x-y)\mathbb{E}[\overline{X(s,y)}X(s,x)]X(s,y)dy\right)ds\right\|_{L^2_{x,\omega}} \lesssim t^\alpha \|X\|^3_{X_T}$$

$$\|\partial_x C\|_{L^2_{x,\omega}} \lesssim t^\alpha \|X\|^3_{X_T}$$

$$\|xC\|_{L^2_{x,\omega}} = \left\|\partial_\xi \hat{C}\right\|_{L^2_{x,\omega}}$$

$$I_1 = \frac{-i}{\sqrt{2\pi}} \int_1^t ds \int d\eta d\sigma e^{2is\eta\sigma} \hat{w}(\eta) \mathbb{E}[\overline{\hat{Z}(s,\xi-\sigma-\eta)}\hat{Z}(\xi-\sigma)]\hat{Z}(\xi-\eta)$$

$$\begin{aligned}\partial_\xi I_1 =& \frac{-i}{\sqrt{2\pi}}\Bigg(\int_1^t ds \int d\eta d\sigma e^{2is\eta\sigma} \hat{w}(\eta) \mathbb{E}\left[\overline{\partial_\xi \hat{Z}(s,\xi-\sigma-\eta)}\hat{Z}(\xi-\sigma)\right]\hat{Z}(\xi-\eta) \\ &+ \int_1^t ds \int d\eta d\sigma e^{2is\eta\sigma} \hat{w}(\eta) \mathbb{E}\left[\overline{\hat{Z}(s,\xi-\sigma-\eta)}\partial_\xi \hat{Z}(\xi-\sigma)\right]\hat{Z}(\xi-\eta) \\ &+ \int_1^t ds \int d\eta d\sigma e^{2is\eta\sigma} \hat{w}(\eta) \mathbb{E}[\hat{Z}(s,\xi-\sigma-\eta)\hat{Z}(\xi-\sigma)]\partial_\xi \hat{Z}(\xi-\eta)\Bigg)\end{aligned}$$

$$\begin{aligned}&\left\|\int_1^t ds \int d\eta d\sigma e^{2is\eta\sigma} \hat{w}(\eta) \mathbb{E}\left[\overline{\partial_\xi \hat{Z}(s,\xi-\sigma-\eta)}\hat{Z}(\xi-\sigma)\right]\hat{Z}(\xi-\eta)\right\|_{L^2_{x,\omega}} \\ &\qquad \lesssim \left\|\int_1^t ds e^{-is\Delta}\left(w * \mathbb{E}\left[\overline{e^{is\Delta}(xZ)}X\right]\right)X\right\|_{L^2_{x,\omega}}\end{aligned}$$

$$\begin{aligned}&\|\int_1^t ds \int d\eta d\sigma e^{2is\eta\sigma} \hat{w}(\eta) \mathbb{E}\left[\overline{\partial_\xi \hat{Z}(s,}\xi-\sigma-\eta\right)\hat{Z}(\xi-\sigma)\Big]\hat{Z}(\xi-\eta)\|_{L^2_{x,\omega}} \\ &\qquad \lesssim \int_1^t ds \|\mathbb{E}\left[\overline{e^{is\Delta}(xZ)}X\right]\Big)\|X\|_{L^2_\omega}\|_{L^2_x}\end{aligned}$$

$$\begin{aligned}&\left\|\int_1^t ds \int d\eta d\sigma e^{2is\eta\sigma} \hat{w}(\eta) \mathbb{E}\left[\overline{\partial_\xi \hat{Z}(s,\xi-\sigma-\eta)}\hat{Z}(\xi-\sigma)\right]\hat{Z}(\xi-\eta)\right\|_{L^2_{x,\omega}} \\ &\qquad \lesssim \int_1^t \|xZ\|_{L^2_{x,\omega}}\|X\|_{L^\infty_x,L^2_\omega}\end{aligned}$$

$$\left\|\partial_\xi I_1\right\|_{L^2_{x,\omega}} \lesssim \int_1^t \|xZ\|_{L^2_{x,\omega}}\|X\|^2_{L^\infty_x,L^2_\omega} \lesssim \int_1^t s^{\alpha-1}\|X\|^3_{\mathcal{X}_T} ds \lesssim t^\alpha \|X\|^3_{\mathcal{X}_T}$$

$$\left\|\partial_\xi \hat{C}\right\|_{L^2_{x,\omega}} \lesssim t^\alpha \|X\|^3_{X_T}.$$

$$\|\hat{Z}(t,\xi)\|_{L^2_\omega} \leq \left\|\hat{X}_*(\xi)\right\|_{L^2_\omega} + \int_1^t \|R(s,\xi)\|_{L^2_\omega}$$

$$\|\hat{Z}(t,\xi)\|_{L^2_\omega} \lesssim \|X_0\|_{H^{0,1}} + t^{-\delta+3\alpha}\|X\|^3_{X_T}$$

$$\|X\|_{L^\infty,L^2_\omega} \lesssim \frac{1}{t^{1/2}}\left(\|X_0\|_{H^{0,1}} + t^{-\delta+3\alpha}\|X\|^3_{\mathcal{X}_T}\right) + \frac{1}{t^{1/2+\beta}}\|f\|_{H^{0,1},L^2_\omega}$$

$$\|X\|_{L^\infty,L^2_\omega} \lesssim \frac{1}{t^{1/2}}\left(\|X_0\|_{H^{0,1}} + \|X\|^3_{X_T}\right)$$

$$\|X(t)\|_{L^\infty_x,L^2_\omega} \lesssim \varepsilon(1+t)^{-1/2}$$

$$T^*:= \sup\left\{T; \|X\|_{L^\infty_{T^*},(H^{1,0},L^2_\omega\cap H^{0,1},L^2_\omega)} \leq C\varepsilon'\right\} = \infty$$

$$\|X\|_{L^\infty_{T^*},(H^{1,0},L^2_\omega\cap H^{0,1},L^2_\omega)} \leq \varepsilon' + C_1\|X\|^3_{\mathcal{X}_{T^*}} \leq \varepsilon' + C^3C_1\varepsilon'^3 \leq \frac{C+1}{2}\varepsilon' < C\varepsilon'$$

$$\|R(s,\xi)\|_{H^{\theta,0}_\xi,L^2_\omega\cap H^{0,\theta}_\xi,L^2_\omega} \lesssim \left(s^{-1-\delta+3\alpha} + s^{-1-\delta'}\right)\|X\|^3_{X_T}$$

$$\mathcal{F}^{-1}_{\eta,\sigma}(F_1)(x,y) = 2\pi e^{i\xi(x+y)}\mathcal{F}_{x'}\left(\mathbb{E}[Z(x'-x)\bar{Z}(x')]Z(x'-y)\right)(\xi),$$

$$\mathcal{F}^{-1}_{\eta,\sigma}(F_2)(x,y) = 2\pi e^{i\xi(x+y)}\mathcal{F}_{x'}\left(\mathbb{E}[Z(x'-y)\bar{Z}(x')]Z(x'-x)\right)(\xi).$$

$$\|R(s,\xi)\|_{H^{\theta,0}_\xi,L^2_\omega} \lesssim s^{-1-\delta}\left\|\langle\nabla\rangle^\theta\int dxdy|x|^\delta|y|^\delta\mathcal{F}_{x'}\left(\mathbb{E}[Z(x'-x)\bar{Z}(x')]Z(x'-y)\right)(\xi)\right\|_{L^2_\xi,L^2_\omega}$$

$$\|R(s,\xi)\|_{H^{\theta,0}_\xi,L^2_\omega} \lesssim s^{-1-\delta}\left\|\int dxdy|x|^\delta|y|^\delta\mathbb{E}\left[Z(x'-x)\langle x'\rangle^\theta\bar{Z}(x')\right]Z(x'-y)\right\|_{L^2_{x'},L^2_\omega}$$

$$|x|^\delta|y|^\delta \lesssim \left(|x'-x|^\delta + |x'|^\delta\right)\left(|x'-y|^\delta + |x'|^\delta\right),$$

$$\|R(s,\xi)\|_{H^{\theta,0}_\xi,L^2_\omega} \lesssim s^{-1-\delta}\left\|\langle x\rangle^\delta Z\right\|^2_{L^1_x,L^2_\omega}\left\|\langle x\rangle^{2\delta+\theta}Z\right\|_{L^2_x,L^2_\omega}.$$

$$\|R(s,\xi)\|_{H^{\theta,0},L^2_\omega} \lesssim s^{-1-\delta+3\alpha}\|X\|^3_{X_T}.$$

$$\hat{C}(X,X,X)(t,\xi) = \int_1^t dsR(s,\xi)$$

$$\|\langle\xi\rangle R(s,\xi)\|_{L^2_\xi,L^2_\omega} \lesssim s^{\alpha-1}\|X\|^3_{X_T}$$

$$\|R(s,\xi)\|_{L^2_\xi,L^2_\omega} \lesssim s^{-1-\frac{1}{4}+3\alpha}\|X\|^3_{X_T}$$

$$\|R(s,\xi)\|_{H^{0,\theta}_\xi,L^2_\omega} \lesssim s^{-1-(1-\theta)/4+\alpha(3-2\theta)}\|X\|^3_{X_T}$$

$$\|\hat{Z}(t,\xi) - \hat{Z}(s,\xi)\|_{H^{\theta,0}_\xi,L^2_\omega\cap H^{0,\theta}_\xi,L^2_\omega\cap L^\infty_\xi,L^2_\omega} \leq \int_s^t \|R(\tau,\xi)\|_{H^{\theta,0}_\xi,L^2_\omega\cap H^{0,\theta}_\xi,L^2_\omega\cap L^\infty_\xi,L^2_\omega}d\tau$$

$$\|\hat{Z}(t,\xi) - \hat{Z}(s,\xi)\|_{H^{\theta,0}_\xi,L^2_\omega\cap H^{0,\theta}_\xi,L^2_\omega\cap L^\infty_\xi,L^2_\omega} \lesssim t^{-\delta} - s^{-\delta}$$

$$W := \lim_{t\to\infty}\hat{Z}(t) \text{ in } L^2_\xi,L^2_\omega \cap L^\infty_\xi,L^2_\omega$$

$$\gamma_0 = \sum_{n\in\mathbb{N}}\alpha_n|e_n\rangle\langle e_n|$$

$$X_0 = \sum_{n\in\mathbb{N}}\sqrt{\alpha_n}g_ne_n$$

$$\mathbb{E}[\langle v,X_0\rangle X_0] = \sum_{n,m}\sqrt{\alpha_n\alpha_m}\langle v,e_n\rangle e_m\mathbb{E}[\overline{g_n}g_m] = \sum_n\alpha_n\langle v,e_n\rangle e_n = \gamma_0(v),$$

$$\|X_0\|^2_{L^2(\Omega,H^{0,1}\cap H^{1,0}} = \mathbb{E}[\langle X_0, \langle\nabla\rangle X_0\rangle] + \mathbb{E}[\langle X_0, \langle x\rangle X_0\rangle]$$

$$\|X_0\|^2_{L^2(\Omega,H^{0,1}\cap H^{1,0}} = \mathbb{E}[\mathrm{Tr}(|X_0\rangle\langle X_0|\langle\nabla\rangle)] + \mathbb{E}[\mathrm{Tr}(|X_0\rangle\langle X_0|\langle x\rangle)]$$

$$\|X_0\|^2_{L^2(\Omega,H^{0,1}\cap H^{1,0}} = \mathrm{Tr}(\mathbb{E}[|X_0\rangle\langle X_0|]\langle\nabla\rangle) + \mathrm{Tr}(\mathbb{E}[|X_0\rangle\langle X_0|]\langle x\rangle) = \mathrm{Tr}(\langle\nabla\rangle\gamma_0) + \mathrm{Tr}(\langle x\rangle\gamma_0) \leq \varepsilon.$$

$$\left\|\hat{X} - e^{-it\xi^2}\hat{W}\right\|_{L^2_\xi,L^2_\omega} \lesssim t^{-\delta}$$

$$\gamma := \mathbb{E}[|X\rangle\langle X|] := u \mapsto \left(x \mapsto \mathbb{E}\left(X(x)\langle X, u\rangle_{L^2_x}\right)\right)$$

$$\gamma_\infty := \mathbb{E}[|W\rangle\langle W|].$$

$$\|\mathbb{E}[|Z_1\rangle\langle Z_2|]\|_{\mathbb{S}^1} = \int_{\mathbb{R}} \left|\mathbb{E}\left[Z_1(x)\overline{Z_2}(x)\right]\right| dx$$

$$\|\mathbb{E}[|Z_1\rangle\langle Z_2|]\|_{\mathbb{E}^1} \leq \int_{\mathbb{R}} \|Z_1(x)\|_{L^2_\omega}\|Z_2(x)\|_{L^2_\omega} dx \leq \|Z_1\|_{L^2_{x,\omega}}\|Z_2\|_{L^2_{x,\omega}}$$

$$\gamma - \gamma_\infty = \mathbb{E}[|S(t)X(t) - W\rangle\langle S(t)X(t)|] + \mathbb{E}[|W\rangle\langle W - S(t)X(t)|].$$

$$d(\gamma_1,\gamma_2) = \inf_{X_i\sim\gamma_i} \|X_1 - X_2\|_{L^2(\Omega,H^{1,0}\cap H^{0,1})}$$

$$d(\gamma_1,\gamma_2) \leq \|X_1 - X_2\|_{L^2(\Omega,H^{1,0}\cap H^{0,1})}$$

$$X(t,x) = X_0 + e^{it\Delta}\tilde{C}(X,X,X)$$

$$\tilde{C}(X,X,X) = -i\int_0^t e^{-is\Delta}\left((w * \mathbb{E}[|X(s)|^2])X(s) - \int w(x-y)\mathbb{E}[\overline{X(s,y)}X(s,x)]X(s,y)dy\right)ds$$

$$\mathcal{F}(w * \mathbb{E}[|X(s)|^2])\partial_x X(s))(\xi) = \int d\eta d\sigma \hat{w}(\eta)\mathbb{E}[\overline{\hat{X}}(s,\sigma-\eta)\hat{X}(s,\sigma)](\xi-\eta)\hat{X}(s,\xi-\eta)$$

$$\|(w * \mathbb{E}[|X(s)|^2])\partial_x X(s))\|_{L^2_x,L^2_\omega} \lesssim \|\hat{X}\|^2_{L^1_\xi,L^2_\omega}\|\xi\hat{X}\|^2_{L^2_\xi,L^2_\omega}$$

$$\|\partial_x(w * \mathbb{E}[|X(s)|^2])X(s))\|_{L^2_x,L^2_\omega} \lesssim \|X\|^3_{H^{1,0}_x,L^2_\omega}$$

$$\|\tilde{C}\|_{H^{1,0}_x,L^2_\omega} \lesssim t\|X\|^3_{H^{1,0}_x,L^2_\omega}$$

$$\|x\tilde{C}\|_{L^2_x,L^2_\omega} = \left\|\partial_\xi\mathcal{F}(\tilde{C})\right\|_{L^2_\xi,L^2_\omega}$$

$$I_1' = \frac{-i}{\sqrt{2\pi}}\int_0^t ds\int d\eta d\sigma e^{2is\eta(\xi-\sigma)}\hat{w}(\eta)\mathbb{E}[\overline{\hat{Z}(s,\sigma-\eta)}\hat{Z}(\sigma)]\hat{Z}(\xi-\eta)$$

$$\partial_\xi I_1' = \frac{-i}{\sqrt{2\pi}}\int_0^t ds\int d\eta d\sigma e^{2is\eta(\xi-\sigma)}\hat{w}(\eta)\mathbb{E}[\overline{\hat{Z}(s,\sigma-\eta)}\hat{Z}(\sigma)]\partial_\xi\hat{Z}(\xi-\eta)$$
$$+2i\frac{-i}{\sqrt{2\pi}}\int_0^t dss\int d\eta d\sigma\eta e^{2is\eta(\xi-\sigma)}\hat{w}(\eta)\mathbb{E}[\hat{Z}(s,\sigma-\eta)\hat{Z}(\sigma)]\hat{Z}(\xi-\eta)$$

$$\left\| \int d\eta d\sigma e^{2is\eta(\xi-\sigma)} \hat{w}(\eta) \mathbb{E}[\overline{\hat{Z}(s,\sigma-\eta)}\hat{Z}(\sigma)] \partial_\xi \hat{Z}(\xi-\eta) \right\|_{L^2_\xi, L^2_\omega} \lesssim \|\hat{Z}\|^2_{L^1_\xi, L^2_\omega} \|\partial_\xi \hat{Z}\|_{L^2_\xi, L^2_\omega}$$

$$\left\| \int d\eta d\sigma e^{2is\eta(\xi-\sigma)} \hat{w}(\eta) \mathbb{E}[\overline{\hat{Z}(s,\sigma-\eta)}\hat{Z}(\sigma)] \partial_\xi \hat{Z}(\xi-\eta) \right\|_{L^2_\xi, L^2_\omega} \lesssim \|X\|^2_{H^{1,0}_x, L^2_\omega} \|Z\|_{H^{0,1}_x, L^2_\omega}$$

$$\mathcal{A} = \int d\eta d\sigma \eta e^{2is\eta(\xi-\sigma)} \hat{w}(\eta) \mathbb{E}[\overline{\hat{Z}(s,\sigma-\eta)}\hat{Z}(\sigma)] \hat{Z}(\xi-\eta)$$

$$\mathcal{A} = \int d\eta d\sigma e^{2is\eta(\xi-\sigma)} \hat{w}(\eta) \mathbb{E}[\overline{\hat{Z}}(s,\sigma-\eta)\sigma\hat{Z}(\sigma)] \hat{Z}(\xi-\eta)$$
$$- \int d\eta d\sigma e^{2is\eta(\xi-\sigma)} \hat{w}(\eta) \mathbb{E}[(\sigma-\eta)\hat{Z}(s,\sigma-\eta)\hat{Z}(\sigma)] \hat{Z}(\xi-\eta)$$

$$\mathcal{A} = \int d\eta d\sigma e^{2isC_1} \hat{w}(\eta-\xi) \mathbb{E}[\overline{\hat{Z}(s,\eta-\sigma)}(\xi-\sigma)\hat{Z}(\xi-\sigma)] \hat{Z}(\eta)$$
$$- \int d\eta d\sigma e^{2isC_2} \hat{w}(\eta-\xi) \mathbb{E}[(\eta-\xi)\hat{Z}(s,\eta-\xi)\hat{Z}(\sigma-\eta)] \hat{Z}(\eta)$$

$$\|\partial_\xi I_1'\|_{L^2_\xi, L^2_\omega} \lesssim t\|X\|^2_{H^{1,0}_x, L^2_\omega} \|Z\|_{H^{0,1}_x, L^2_\omega} + t^2 \|X\|^3_{H^{1,0}_x, L^2_\omega}$$

$$\|\tilde{C}\|_{H^{0,1}_x \cap H^{1,0}_x, L^2_\omega} \lesssim t\|X\|^2_{H^{1,0}_x, L^2_\omega} \|Z\|_{H^{0,1}_x, L^2_\omega} + t^2 \|X\|^3_{H^{1,0}_x, L^2_\omega}$$

$$X_T' = \left\{ X : \|X\|_{X_T'} := \|X\|_{L^\infty_T, \dot{H}^{1,0}_x, L^2_\omega} + \|Z\|_{L^\infty_T, \dot{H}^{0,1}_x, L^2_\omega} + \|X\|_{L^\infty_T, L^2_x, L^2_\omega} < \infty \right\}$$

$$E(\rho,\delta) = E(\rho,0) + S^{NM}(\rho)\delta^2 + O(\delta^4) + \cdots$$

$$E(\rho,0) = E_0 + \frac{K^{NM}}{18\rho_0^2}(\rho-\rho_0)^2 + \cdots$$

$$S^{NM}(\rho) = \frac{1}{2}\frac{\partial^2 E(\rho,\delta)}{\partial\delta^2}\bigg|_{\delta=0} = a_4 + \frac{p_0^{NM}}{\rho_0^2}(\rho-\rho_0)$$
$$+ \frac{\Delta K^{NM}}{18\rho_0^2}(\rho-\rho_0)^2 + \cdots$$

$$p_0^{NM} = \rho_0^2 \frac{\partial S^{NM}}{\partial\rho}\bigg|_{\rho=\rho_0}$$

$$\Delta K^{NM} = 9\rho_0^2 \frac{\partial^2 S^{NM}}{\partial\rho^2}\bigg|_{\rho=\rho_0}$$

$$E(A,Z) = -B + E_S A^{-1/3} + S(A)\frac{(N-Z)^2}{A^2} + E_C \frac{Z^2}{A^{4/3}}$$
$$+ E_{dif}\frac{Z^2}{A^2} + E_{ex}\frac{Z^{4/3}}{A^{4/3}} + a\Delta A^{-3/2}$$

$$S(A) = \frac{S^V(A)}{1 + \frac{S^S(A)}{S^V(A)} A^{-1/3}} = \frac{S^V(A)}{1 + \frac{A^{-1/3}}{\kappa(A)}}$$

$$\kappa(A) \equiv \frac{S^V(A)}{S^S(A)}$$

$$S(A) \simeq S^V - \frac{S^S}{A^{1/3}}$$

$$S^V(A) = S(A)\left(1 + \frac{1}{\kappa(A)A^{1/3}}\right)$$

$$S^S(A) = \frac{S(A)}{\kappa(A)}\left(1 + \frac{1}{\kappa(A)A^{1/3}}\right)$$

$$\kappa(A) = \frac{S^V(A)}{S^S(A)} = \frac{3}{r_0}\int dr \frac{\rho(r)}{\rho_0}\left\{\frac{S^{NM}(\rho_0)}{S^{NM}[\rho(r)]} - 1\right\}$$

$$\frac{4\pi r_0^3}{3} = \frac{1}{\rho_0}$$

$$S^{NM}(\rho) = \mathcal{E}(\rho, \delta = 1) - \mathcal{E}(\rho, \delta = 0)$$

$$G(\omega, \delta) = V + V\frac{Q(\delta)}{\omega - H_0} G(\omega, \delta)$$

$$\mathcal{E}(\rho, \delta) = \mathcal{T} + \mathcal{U}(\rho, \delta)$$

$$\mathcal{T} = \frac{3}{10mk_F^3}\left(k_{Fp}^5 + k_{Fn}^5\right)$$

$$\begin{aligned}\rho &= \frac{2}{3\pi^2}k_F^3 = \frac{(1+\delta)}{2}\rho + \frac{(1-\delta)}{2}\rho \\ &= \frac{1}{3\pi^2}k_{Fn}^3 + \frac{1}{3\pi^2}k_{Fp}^3\end{aligned}$$

$$\begin{aligned}\mathcal{U}(\rho, \delta) = &\frac{1}{2\rho}\frac{1}{(2\pi)^6}\sum_{a,b=(pn)}\int_0^{k_{Fa}} d^3k_a \int_0^{k_{Fb}} d^3k_b \\ &\times \langle k_a k_b | G\big(\omega = \epsilon_a(k_a) + \epsilon_b(k_b)\big) | k_a k_b \rangle\end{aligned}$$

$$\rho(\mathbf{r}, \mathbf{r}') = \int_0^\infty dx |\mathcal{F}(x)|^2 \rho_x^{NM}(\mathbf{r}, \mathbf{r}')$$

$$\begin{aligned}\rho_x^{NM}(\mathbf{r}, \mathbf{r}') = &3\rho_0(x)\frac{j_1(k_F(x)|\mathbf{r} - \mathbf{r}'|)}{(k_F(x)|\mathbf{r} - \mathbf{r}'|)} \\ &\times \Theta\left(x - \frac{|\mathbf{r} + \mathbf{r}'|}{2}\right)\end{aligned}$$

$$k_F(x) = \left(\frac{3\pi^2}{2}\rho_0(x)\right)^{1/3} \equiv \frac{\beta}{x}$$

$$\beta = \left(\frac{9\pi A}{8}\right)^{1/3} \simeq 1.52A^{1/3}$$

$$\rho(\mathbf{r}) = \int_0^\infty dx|\mathcal{F}(x)|^2\rho_0(x)\Theta(x - |\mathbf{r}|)$$

$$|\mathcal{F}(x)|^2 = -\frac{1}{\rho_0(x)}\frac{d\rho(r)}{dr}\bigg|_{r=x}$$

$$\int_0^\infty dx|\mathcal{F}(x)|^2 = 1$$

$$S(A) = \int_0^\infty dx|\mathcal{F}(x)|^2 S^{NM}[\rho(x)]$$

$$p_0(A) = \int_0^\infty dx|\mathcal{F}(x)|^2 p_0^{NM}[\rho(x)]$$

$$\begin{aligned}\rho^{NM}(|\mathbf{r}|, x) &= \int_0^\infty dx'\delta(x' - x)\rho_0(x')\Theta(x' - |\mathbf{r}|)\\ &= \rho_0(x)\Theta(x - |\mathbf{r}|)\end{aligned}$$

$$\begin{aligned}S^{NM}[\rho^{NM}(|\mathbf{r}|, x)] &= \int_0^\infty dx'\delta(x' - x)S^{NM}[\rho^{NM}(|\mathbf{r}|, x')]\\ &= S^{NM}[\rho_0(x)\Theta(x - |\mathbf{r}|)]\end{aligned}$$

$$\begin{aligned}S^{NM}(x) =& \rho_0^{2/3}(x) + b_4\rho_0(x)\\ &+ b_5\rho_0^{4/3}(x) + b_6\rho_0^{5/3}(x)\\ p_0^{NM}(x) =& 27.8\rho_0^{5/3}(x) + b_4\rho_0^2(x)\\ &+ \frac{4}{3}b_5\rho_0^{7/3}(x) + \frac{5}{3}b_6\rho_0^{8/3}(x)\end{aligned}$$

$$b_4 = 148.26, b_5 = 372.84, b_6 = -769.57$$

$$\begin{aligned}\kappa(A) =& \frac{3}{r_0\rho_0}\int_0^\infty dx|\mathcal{F}(x)|^2\rho_0(x)\\ &\times \int_0^x dr\left\{\frac{S^{NM}(\rho_0)}{S^{NM}[\rho_0(x)]} - 1\right\}\end{aligned}$$

$$\kappa(A) = \frac{3}{r_0\rho_0}\int_0^\infty dx|\mathcal{F}(x)|^2 x\rho_0(x)\left\{\frac{S^{NM}(\rho_0)}{S^{NM}[\rho_0(x)]} - 1\right\}$$

$$S^{NM}(\rho) = S^V\left(\frac{\rho}{\rho_0}\right)^\gamma$$

$$S^{NM}(\rho) = 12.5\left(\frac{\rho}{\rho_0}\right)^{2/3} + 17.6\left(\frac{\rho}{\rho_0}\right)^{\gamma}$$

$$E_v = \min_n\{F[n] + n \cdot v\}$$

$$n \cdot v = \int d^3 r n(\mathbf{r}) v(\mathbf{r})$$

$$F[n] = T_{\mathrm{S}}[n] + U_{\mathrm{H}}[n] + E_{\mathrm{XC}}[n],$$

$$F[n] = F_{\mathrm{SH}}[n] + E_{\mathrm{XC}}[n],$$

$$E_v[n] = F[n] + n \cdot v$$

$$E_v = \min_n E_v[n],$$

$$D_v[\Delta n] = E_v[n_v + \Delta n] - E_v \geq 0$$

$$\int d^3 r \Delta n(\mathbf{r}) = 0$$

$$D_v[n - n_v] \leq \Delta_c$$

$$A[\Delta n] = \int d^3 r' \int d^3 r A(\mathbf{r}, \mathbf{r}') \Delta n(\mathbf{r}) \Delta n(\mathbf{r}')$$

$$E_v[n_v + \Delta n] = E_v + \frac{1}{2} K_v[\Delta n] + \mathcal{O}(\Delta n^3)$$

$$K_v(\mathbf{r}, \mathbf{r}') = \left.\frac{\delta^2 E_v[n]}{\delta n(\mathbf{r}') \delta n(\mathbf{r})}\right|_{n=n_v}$$

$$K_v(\mathbf{r}, \mathbf{r}') = f_{\mathrm{SH}}[n_v](\mathbf{r}, \mathbf{r}') + f_{\mathrm{XC}}[n_v](\mathbf{r}, \mathbf{r}'),$$

$$f_{\mathrm{SH}}[n](\mathbf{r}, \mathbf{r}') = \underbrace{\frac{\delta^2 T_{\mathrm{S}}[n]}{\delta n(\mathbf{r}') \delta n(\mathbf{r})}}_{f_{\mathrm{S}}(\mathbf{r}, \mathbf{r}')}, + \frac{1}{|\mathbf{r} - \mathbf{r}'|}$$

$$f_{\mathrm{XC}}[n](\mathbf{r}, \mathbf{r}') = \frac{\delta^2 E_{\mathrm{XC}}[n]}{\delta n(\mathbf{r}') \delta n(\mathbf{r})}$$

$$D_v[\Delta n] \approx \frac{1}{2} K_v[\Delta n]$$

$$\int d^3 r \Delta n(\mathbf{r}) = 0$$

$$\Delta n_\beta(\mathbf{r}) = \beta \Delta n(\mathbf{r})$$

$$\beta_c = \sqrt{\frac{2\Delta_c}{K_v[\Delta n]}}.$$

$$\Delta E_{\mathrm{XC}}[n] = E_{\mathrm{XC}}^{(1)}[n] - E_{\mathrm{XC}}^{(0)}[n]$$

$$\Delta E_v = E_v^{(1)}\left[n_v^{(1)}\right] - E_v^{(0)}\left[n_v^{(0)}\right].$$

$$\Delta E_v = -D_v^{(1)}[-\Delta n_v] + \Delta E_{\mathrm{XC}}\left[n_v^{(0)}\right]$$

$$\Delta n_v(\mathbf{r}) = n_v^{(1)}(\mathbf{r}) - n_v^{(0)}(\mathbf{r})$$

$$\Delta E_v = \Delta E_{\mathrm{XC}}\left[n_v^{(1)}\right] + D_v^{(0)}[\Delta n_v].$$

$$\Delta E_{\mathrm{XC}}\left[n_v^{(1)}\right] \leq \Delta E_v \leq \Delta E_{\mathrm{XC}}\left[n_v^{(0)}\right].$$

$$\left|\Delta E_{\mathrm{XC}}\left[n_v^{(0)}\right]\right| \gg D_v^{(1)}[-\Delta n_v] \text{ and } \left|\Delta E_{\mathrm{XC}}\left[n_v^{(1)}\right]\right| \gg D_v^{(0)}[\Delta n_v]$$

$$E_{\mathrm{XC}}^{(\alpha)}[n] = E_{\mathrm{XC}}^{(0)}[n] + \alpha \Delta E_{\mathrm{XC}}[n].$$

$$E_v^{(\alpha)}[n] = \underbrace{F_{\mathrm{SH}}[n] + n \cdot v + E_{\mathrm{XC}}^{(0)}[n]}_{E_v^{(0)}[n]} + \alpha \Delta E_{\mathrm{XC}}[n]$$

$$\Delta E_v^{(\alpha)} = E_v^{(\alpha)} - E_v^{(0)} = E_v^{(\alpha)}\left[n_v^{(\alpha)}\right] - E_v^{0}\left[n_v^{(0)}\right].$$

$$\Delta E_v^{(\alpha)} = \int_0^{\alpha} d\alpha' \frac{\partial E_v^{(\alpha')}}{\partial \alpha'}$$

$$\frac{\partial E_v^{(\alpha)}}{\partial \alpha} = \Delta E_{\mathrm{XC}}\left[n_v^{(\alpha)}\right].$$

$$\Delta E_v^{(\alpha)} = \int_0^{\alpha} d\alpha' \Delta E_{\mathrm{XC}}\left[n_v^{(\alpha')}\right]$$

$$\Delta E_v = \int_0^{1} d\alpha \Delta E_{\mathrm{XC}}\left[n_v^{(\alpha)}\right]$$

$$v_{\mathrm{SHXC}}^{(0)}[n](\mathbf{r}) + \alpha \Delta v_{\mathrm{XC}}[n](\mathbf{r}) + v(\mathbf{r}) = \mu.$$

$$\begin{aligned} &v_{\mathrm{SHXC}}^{(0)}\left[n_v^{(0)}\right](\mathbf{r}) + \alpha\left[K_v^{(0)} \cdot \Delta n_v^{(\alpha)}\right](\mathbf{r}) \\ &+\alpha\left(\Delta v_{\mathrm{XC}}\left[n_v^{(0)}\right](\mathbf{r}) + \alpha\left[\Delta f_{\mathrm{XC}}\left[n_v^{(0)}\right] \cdot \Delta n_v^{(\alpha)}\right](\mathbf{r})\right) + v(\mathbf{r}) = \mu \end{aligned}$$

$$[A \cdot \Delta n](\mathbf{r}) = \int d^3r' A(\mathbf{r}, \mathbf{r}')\Delta n(\mathbf{r}')$$

$$v_{\mathrm{SHXC}}^{(0)}\left[n_v^{(0)}\right](\mathbf{r}) + v(\mathbf{r}) = \mu$$

$$\left[K_v^{(0)}\left[n_v^{(0)}\right]\cdot\Delta n_v^{(\alpha)}\right](\mathbf{r})+\Delta v_{\mathrm{XC}}\left[n_v^{(0)}\right](\mathbf{r})$$
$$+\alpha\left[\Delta f_{\mathrm{XC}}\left[n_v^{(0)}\right]\cdot\Delta n_v^{(\alpha)}\right](\mathbf{r})=0$$

$$K_v^{(\alpha)}(\mathbf{r},\mathbf{r}')=K_v^{(0)}(\mathbf{r},\mathbf{r}')+\alpha\Delta f_{\mathrm{XC}}(\mathbf{r},\mathbf{r}')$$

$$\int d^3r' K_v^{(\alpha)}\left[n_v^{(0)}\right](\mathbf{r},\mathbf{r}')\Delta n_v^{(\alpha)}(\mathbf{r}')=-\Delta v_{\mathrm{XC}}\left[n_v^{(0)}\right](\mathbf{r})$$

$$\Delta n_v^{(\alpha)}(\mathbf{r})=-\int d^3r'\left\{K_v^{(\alpha)}\right\}^{-1}\left[n_v^{(0)}\right](\mathbf{r},\mathbf{r}')\Delta v_{\mathrm{XC}}\left[n_v^{(0)}\right](\mathbf{r}')$$

$$n_v^{(\alpha)}(\mathbf{r})\approx n_v^{(0)}(\mathbf{r})+\alpha\Delta n_v(\mathbf{r})$$

$$n_v^{(\alpha)}(\mathbf{r})=n_v^{(1)}(\mathbf{r})-\bar{\alpha}\Delta n_v^{(\alpha)'}$$

$$\Delta n_v^{(\alpha)'}(\mathbf{r})=-\int d^3r'\left\{K_v^{(\alpha)}\right\}^{-1}\left[n_v^{(1)}\right](\mathbf{r},\mathbf{r}')\Delta v_{\mathrm{XC}}\left[n_v^{(1)}\right](\mathbf{r}')$$

$$n_v^{\alpha}(\mathbf{r})=n_v^{(0)}(\mathbf{r})+\alpha\Delta n_v^{(\alpha)}(\mathbf{r})$$

$$\begin{aligned}E_v^{(\alpha)}\left[n_v^{(\alpha)}\right]=&F_{\mathrm{SH}}\left[n_v^{(0)}+\alpha\Delta n_v^{(\alpha)}\right]+n_v^{(0)}\cdot v\\&+\alpha\Delta n_v^{(\alpha)}\cdot v+E_{\mathrm{XC}}^{(0)}\left[n_v^{(0)}+\alpha\Delta n_v^{(\alpha)}\right]\\&+\alpha\Delta E_{\mathrm{XC}}\left[n_v^{(0)}+\alpha\Delta n_v^{(\alpha)}\right]\end{aligned}$$

$$\begin{aligned}E_v^{(\alpha)}=&E_v^{(0)}\left[n_v^{(0)}\right]+\alpha\Delta E_{\mathrm{XC}}\left[n_v^{(0)}\right]\\&+\alpha\left(v_{\mathrm{SHXC}}^{(0)}\left[n_v^{(0)}\right]+v\right)\cdot\Delta n_v^{(\alpha)}\\&+\alpha^2\left(\Delta v_{\mathrm{XC}}\left[n_v^{(0)}\right]\cdot\Delta n_v^{(\alpha)}+\frac{1}{2}K_v^{(0)}\left[\Delta n_v^{(\alpha)}\right]\right)\\&+\mathcal{O}(\alpha^3)\end{aligned}$$

$$\begin{aligned}E_v^{(\alpha)}=&E_v^{(0)}\left[n_v^{(0)}\right]+\alpha\Delta E_{\mathrm{XC}}\left[n_v^{(0)}\right]\\&+\alpha^2\left(\frac{1}{2}K_v^{(0)}\left[\Delta n_v^{(\alpha)}\right]+\Delta v_{\mathrm{XC}}\left[n_v^{(0)}\right]\cdot\Delta n_v^{(\alpha)}\right)\\&+\mathcal{O}(\alpha^3)\end{aligned}$$

$$\begin{aligned}E_v^{(\alpha)}=&E_v^{(0)}\left[n_v^{(0)}\right]+\alpha\Delta E_{\mathrm{XC}}\left[n_v^{(0)}\right]+\frac{\alpha^2}{2}\Delta v_{\mathrm{XC}}\left[n_v^{(0)}\right]\cdot\Delta n_v^{(\alpha)}\\&+\mathcal{O}(\alpha^3)\end{aligned}$$

$$\begin{aligned}&\Delta E_{\mathrm{XC}}\left[n_v^{(0)}+\frac{\alpha}{2}\Delta n_v^{(\alpha)}\right]=\\&\Delta E_{\mathrm{XC}}\left[n_v^{(0)}\right]+\frac{\alpha}{2}\Delta v_{\mathrm{XC}}\left[n_v^{(0)}\right]\cdot\Delta n_v^{(\alpha)}+\mathcal{O}(\alpha^2),\end{aligned}$$

$$E_v^{(\alpha)}=E_v^{(0)}\left[n_v^{(0)}\right]+\alpha\Delta E_{\mathrm{XC}}\left[n_v^{(0)}+\frac{\alpha}{2}\Delta n_v^{(\alpha)}\right]+\cdots$$

$$n_v^{(\alpha)}=n_v^{(1)}(\mathbf{r})-\bar{\alpha}\Delta n_v^{(\alpha)}(\mathbf{r})$$

$$E_v^{(\alpha)} = E_v^{(1)}\left[n_v^{(1)}\right] - \bar{\alpha}\Delta E_{\mathrm{XC}}\left[n_v^{(1)} - \frac{\bar{\alpha}}{2}\Delta n_v^{(\alpha)}\right] + \cdots$$

$$\Delta\tilde{E}_v = \tilde{E}_v - E_v$$

$$\Delta\tilde{E}_v = \underbrace{\tilde{E}_v[\tilde{n}_v] - E_v[\tilde{n}_v]}_{\Delta\tilde{E}_{\mathrm{XC}}[\tilde{n}_v]} + \underbrace{E_v[\tilde{n}_v] - E_v[n_v]}_{\Delta E^{ideal}[\Delta\tilde{n}_v]=D_v[\Delta\tilde{n}_v]}$$

$$\Delta\tilde{E}_v = \underbrace{\tilde{E}_v[\tilde{n}_v] - \tilde{E}_v[n_v]}_{\Delta E_{\mathrm{D}}=-\tilde{D}_v[-\Delta\tilde{n}_v]} + \underbrace{\Delta\tilde{E}_{\mathrm{XC}}[n_v]}_{\Delta E_{\mathrm{F}}}.$$

$$\Delta E^{ideal}[\Delta\tilde{n}_v] \approx \frac{1}{2}K_v[\Delta\tilde{n}_v]$$

$$\tilde{D}_v[-\Delta\tilde{n}_v] \approx \frac{1}{2}\tilde{K}_v[\Delta\tilde{n}_v]$$

$$\tilde{E}_{\mathrm{XC}}^{(\alpha)}[n] = \tilde{E}_{\mathrm{XC}}^{\mathrm{GGA}}[n] + \alpha\left(E_{\mathrm{X}}[n] - \tilde{E}_{\mathrm{X}}^{\mathrm{GGA}}[n]\right).$$

$$\tilde{E}_{\mathrm{XC}}^{(\alpha)}[n] = \tilde{E}_{\mathrm{X}}^{\mathrm{B88}}[n] + \alpha\left(E_{\mathrm{X}}[n] - \tilde{E}_{\mathrm{X}}^{\mathrm{B88}}[n]\right),$$

$$\Delta\tilde{E}_v^{(\alpha)} = \underbrace{-\tilde{D}_v^{(\alpha)}\left[-\Delta\tilde{n}_v^{(\alpha)}\right]}_{\Delta E_{\mathrm{D}}^{(\alpha)}} + \underbrace{\Delta\tilde{E}_{\mathrm{XC}}^{(\alpha)}[n_v]}_{\Delta E_{\mathrm{F}}^{(\alpha)}},$$

$$\Delta\tilde{E}_v^{(\alpha)} = \Delta\tilde{E}_{\mathrm{XC}}^{(\alpha)}\left[\tilde{n}_v^{(\alpha)}\right] + D_v\left[\Delta\tilde{n}_v^{(\alpha)}\right].$$

$$F[n] = T_{\mathrm{S}}[n], E_{\mathrm{X}}[n] = -U_{\mathrm{H}}[n], E_{\mathrm{C}} = 0\ (N = 1).$$

$$\tilde{E}_{\mathrm{XC}}^{(\alpha)}[n] = \tilde{E}_{\mathrm{XC}}^{\mathrm{PBE}}[n] + \alpha\left(E_{\mathrm{X}}[n] - \tilde{E}_{\mathrm{XC}}^{\mathrm{PBE}}[n]\right),$$

$$\tilde{E}_{\mathrm{XC}}^{(\alpha)}[n] = \alpha\tilde{E}_{\mathrm{X}}^{(\alpha)}[n]$$

$$\Delta E_{\mathrm{D}} = -\frac{1}{2}f_{\mathrm{SH}}\left[n_v^{(0)}, \Delta n\right]$$

$$\underbrace{f_{\mathrm{S}}[n_v, \Delta n]}_{-2\Delta E^{\mathrm{ideal}}} \sim \underbrace{f_{\mathrm{SH}}\left[n_v^{(0)}, \Delta n\right]}_{-2\Delta E_{\mathrm{D}}}\ (\text{H atom }),$$

$$F^{\mathrm{TF}}[n] = \underbrace{T_{\mathrm{S}}^{\mathrm{TF}}[n]}_{A^{\mathrm{TF}}\int d^3rn(\mathbf{r})^{5/3}} + U[n]$$

$$\Delta E_v^{\mathrm{TF}} = \underbrace{E_v^{\mathrm{TF}}[n_v^{\mathrm{TF}}] - E_v^{\mathrm{TF}}[n_v]}_{\Delta E_{\mathrm{D}}^{\mathrm{TF}}} + \underbrace{\Delta F^{\mathrm{TF}}[n_v]}_{\Delta E_{\mathrm{F}}^{\mathrm{TF}}}$$

$$\Delta F^{\mathrm{TF}}[n] = \Delta E_v^{\mathrm{TF}}[n] = \Delta T_{\mathrm{S}}^{\mathrm{TF}}[n] - E_{\mathrm{XC}}[n]$$

$$\lim_{Z\to\infty}\frac{\Delta E_Z^{\mathrm{TF}}}{E_Z} \to 0$$

$$F^{RHF}[n] = T_{\mathrm{S}}[n] + U_{\mathrm{H}}[n]/2$$

$$E_{\mathrm{C}}^{QC} = E - E^{RHF}[n^{RHF}].$$

$$\Delta E_F = -E_{\mathrm{C}}$$

$$\Delta E_D = E_{\mathrm{C}} - E_{\mathrm{C}}^{QC}$$

$$E_{AB}^{(j)} = E_A^{(j)}\left[n_A^{(j)}\right] - E_B^{(j)}\left[n_B^{(j)}\right].$$

$$\Delta E_{AB} = E_{AB}^{(1)} - E_{AB}^{(0)}.$$

$$\Delta E_{AB} = E_A^{(1)}\left[n_A^{(1)}\right] - E_A^{(0)}\left[n_A^{(0)}\right] - \left(E_B^{(1)}\left[n_B^{(1)}\right] - E_B^{(0)}\left[n_B^{(0)}\right]\right)$$

$$\begin{aligned}\Delta E_{AB} =& \Delta E_{\mathrm{XC}}\left[n_A^{(0)}\right] - E_{\mathrm{XC}}\left[n_B^{(0)}\right] \\ & \underbrace{-D_A^{(1)}[-\Delta n_A] + D_B^{(1)}[-\Delta n_B]}_{-D_{AB}^{(1)}}.\end{aligned}$$

$$\begin{aligned}\Delta E_{AB} =& \Delta E_{\mathrm{XC}}\left[n_A^{(0)}\right] - \Delta E_{\mathrm{XC}}\left[n_B^{(0)}\right] \\ & + \underbrace{D_A^{(0)}[\Delta n_A] - D_B^{(0)}[\Delta n_B]}_{D_{AB}^{(0)}}\end{aligned}$$

$$D_A^{(0)}\left[n_A^{(1)}\right] \sim D_B^{(0)}\left[n_B^{(1)}\right]$$

$$\sum_{l=1}^{L} R_l \to \sum_{m=1}^{M} P_m,$$

$$E_{\mathrm{ED}}^{(j)} = \sum_{m=1}^{M} E_{P,m}^{(j)}\left[n_{P,m}^{(j)}\right] - \sum_{l=1}^{L} E_{R,l}^{(j)}\left[n_{R,l}^{(j)}\right].$$

$$\Delta E_{\mathrm{ED}} = E_{\mathrm{ED}}^{(1)} - E_{\mathrm{ED}}^{(0)}.$$

$$D_{\mathrm{ED}}^{(0)} = \sum_{m=1}^{M} D_{P,m}^{(0)}[\Delta n_{P,m}] - \sum_{l=1}^{L} D_{R,l}^{(0)}[\Delta n_{R,l}],$$

$$D_{\mathrm{ED}}^{(1)} = \sum_{m=1}^{M} D_{P,m}^{(1)}[-\Delta n_{P,m}] - \sum_{l=1}^{L} D_{R,l}^{(1)}[-\Delta n_{R,l}].$$

$$\Delta_n = \max\left(\left|D^{(0)}\right|, \left|D^{(1)}\right|\right).$$

$$\eta = \frac{\Delta_n}{|\Delta E_{\mathrm{ED}}|}.$$

$$\bar{\Delta}_{\mathrm{ED}} = \sqrt{\frac{1}{K}\sum_{k=1}^{K} \left(\Delta E_{\mathrm{ED},k}\right)^2},$$

$$\bar{\eta} = \frac{\Delta_n}{\bar{\Delta}_{\mathrm{ED}}}$$

$$\tilde{E}_{\mathrm{DS}} = \left|\tilde{E}[n_{\mathrm{LDA}}] - \tilde{E}[n_{\mathrm{HF}}]\right|,$$

$$n(\mathbf{r}) = \frac{\delta E_v}{\delta v(\mathbf{r})}.$$

$$\Delta n(\mathbf{r}) = \frac{\delta\left(E^{DFT}[n^{\mathrm{HF}}] - E^{DFT}[n^{DFT}]\right)}{\delta v(\mathbf{r})}.$$

$$\mathcal{F}(\mathcal{H}) = \mathcal{H}^{(0)} \oplus \mathcal{H}^{(1)} \oplus \cdots \oplus \mathcal{H}^{(N)} \oplus \cdots \oplus \mathcal{H}^{(M)}$$

$$\left(\hat{\gamma}^\dagger \hat{\gamma}\right) = \left(\hat{c}^\dagger \hat{c}\right)\begin{pmatrix} U & V^\star \\ V & U^\star \end{pmatrix}$$

$$UU^\dagger + V^\star V^T = \mathbb{I}, UV^\dagger + V^\star U^T = 0$$
$$U^\dagger U + V^\dagger V = \mathbb{I}, U^\dagger V^\star + V^\dagger U^\star = 0$$

$$\hat{\gamma}_i = \begin{cases} \hat{\beta}_i^\dagger, & i = 1, \dots, N \\ \hat{\beta}_i, & i = N+1, \dots, M \end{cases}$$

$$\left|\omega_{\mathrm{paired}}\right\rangle = \mathcal{C}\exp\left(\sum_{\alpha<\beta} Z_{\alpha,\beta}\hat{c}_\alpha^\dagger \hat{c}_\beta^\dagger\right)|0\rangle$$

$$|\omega_{\mathrm{AGP}}\rangle = \mathcal{C}'\left(\sum_{\alpha<\beta} Z_{\alpha,\beta}\hat{c}_\alpha^\dagger \hat{c}_\beta^\dagger\right)^{N/2}|0\rangle,$$

$$\left(\hat{\gamma}^\dagger \hat{\gamma}\right) = \left(\hat{c}^\dagger \hat{c}\right)\begin{pmatrix} U_v & V_v^\star \\ V_v & U_v^\star \end{pmatrix}$$

$$\mathcal{S}_v = \{|\omega\rangle \in \mathcal{M}_{HFB} : \langle\omega_v \mid \omega\rangle \neq 0\}$$

$$|\omega\rangle = \langle\omega_v \mid \omega\rangle \exp\left(\hat{Z}\right)|\omega_v\rangle,$$

$$\hat{Z} = \sum_{\alpha<\beta} Z_{\alpha,\beta}\hat{\gamma}_\alpha^\dagger \hat{\gamma}_\beta^\dagger$$

$$Z = \left((V_v^T U + U_v^T V)\left(U_v^\dagger U + V_v^\dagger V\right)^{-1}\right)^\star$$

$$\mathbb{V} = V_v^T U + U_v^T V, \mathbb{U} = U_v^\dagger U + V_v^\dagger V$$

$$|\omega\rangle \in \mathcal{S}_v \subset \mathcal{M}_{HFB} \leftrightarrow (U, V) \leftrightarrow (\mathbb{U}, \mathbb{V}) \leftrightarrow Z$$

$$|\omega_l\rangle = \langle\omega_v \mid \omega_l\rangle e^{\hat{Z}^{(l)}}|\omega_v\rangle, \hat{Z}^{(l)} = \sum_{\alpha<\beta} Z^{(l)}_{\alpha,\beta}\hat{\gamma}^\dagger_\alpha\hat{\gamma}^\dagger_\beta$$

$$Z^{(l)} = \left((V_v^T U_l + U_v^T V_l)\left(U_v^\dagger U_l + V_v^\dagger V_l\right)^{-1}\right)^\star,$$

$$\langle\omega_0 \mid \omega_1\rangle = \langle\omega_0 \mid \omega_v\rangle\langle\omega_v \mid \omega_1\rangle\langle\omega_v|e^{\hat{Z}^{(0)\dagger}}e^{\hat{Z}^{(1)}}|\omega_v\rangle$$
$$= \langle\omega_0 \mid \omega_v\rangle\langle\omega_v \mid \omega_1\rangle(-1)^{M(M+1)/2} pf\begin{pmatrix} Z^{(1)} & -\mathbb{I} \\ \mathbb{I} & -Z^{(0)\star}\end{pmatrix}$$

$$|\phi_l\rangle = e^{\hat{Z}^{(l)}}|\omega_v\rangle = \exp\left(\sum_{\alpha<\beta} Z^{(l)}_{\alpha,\beta}\hat{\gamma}^\dagger_\alpha\hat{\gamma}^\dagger_\beta\right)|\omega_v\rangle$$

$$\langle\phi_0 \mid \phi_1\rangle = (-1)^{M(M+1)/2} pf\begin{pmatrix} Z^{(1)} & -\mathbb{I} \\ \mathbb{I} & -Z^{(0)\star}\end{pmatrix}$$

$$\rho_{k_1k_2} \stackrel{\text{def}}{=} \frac{\langle\phi_0|\hat{\gamma}^\dagger_{k_2}\hat{\gamma}_{k_1}|\phi_1\rangle}{\langle\phi_0 \mid \phi_1\rangle}, \kappa_{k_1k_2} \stackrel{\text{def}}{=} \frac{\langle\phi_0|\hat{\gamma}_{k_2}\hat{\gamma}_{k_1}|\phi_1\rangle}{\langle\phi_0 \mid \phi_1\rangle}$$
$$\bar{\kappa}^\star_{k_1k_2} \stackrel{\text{def}}{=} -\frac{\langle\phi_0|\hat{\gamma}^\dagger_{k_2}\hat{\gamma}^\dagger_{k_1}|\phi_1\rangle}{\langle\phi_0 \mid \phi_1\rangle}, \sigma^\star_{k_1k_2} \stackrel{\text{def}}{=} -\frac{\langle\phi_0|\hat{\gamma}_{k_2}\hat{\gamma}^\dagger_{k_1}|\phi_1\rangle}{\langle\phi_0 \mid \phi_1\rangle}$$

$$\rho_{k_1k_2} = -\left(Z^{(1)}\left(\mathbb{I} - Z^{(0)\star}Z^{(1)}\right)^{-1}Z^{(0)\star}\right)_{k_1,k_2}$$
$$\kappa_{k_1k_2} = \left(Z^{(1)}\left(\mathbb{I} - Z^{(0)\star}Z^{(1)}\right)^{-1}\right)_{k_1,k_2}$$
$$\bar{\kappa}^\star_{k_1k_2} = \left(\left(\mathbb{I} - Z^{(0)\star}Z^{(1)}\right)^{-1}Z^{(0)\star}\right)_{k_1,k_2}$$
$$\sigma^\star_{k_1k_2} = -\left(\mathbb{I} - Z^{(0)\star}Z^{(1)}\right)^{-1}_{k_1,k_2}$$

$$G_{\alpha\beta} = \frac{\langle\phi_0|\hat{c}^\dagger_\beta\hat{c}_\alpha|\phi_1\rangle}{\langle\phi_0 \mid \phi_1\rangle}$$
$$= \sum_{ls}(U_v^\star)_{\beta l}(V_v^\star)_{\alpha s}(-\bar{\kappa}^\star_{sl}) + \sum_{ls}(U_v^\star)_{\beta l}(U_v)_{\alpha s}\rho_{sl}$$
$$+ \sum_{ls}(V_v)_{\beta l}(V_v^\star)_{\alpha s}(-\sigma^\star_{sl}) + \sum_{ls}(V_v)_{\beta l}(U_v)_{\alpha s}\kappa_{sl}$$

$$\tau_{\alpha\beta} = \frac{\langle\phi_0|\hat{c}_\beta\hat{c}_\alpha|\phi_1\rangle}{\langle\phi_0 \mid \phi_1\rangle}$$
$$= \sum_{ls}(V_v^\star)_{\beta l}(V_v^\star)_{\alpha s}(-\bar{\kappa}^\star_{sl}) + \sum_{ls}(V_v^\star)_{\beta l}(U_v)_{\alpha s}\rho_{sl}$$
$$+ \sum_{ls}(U_v)_{\beta l}(V_v^\star)_{\alpha s}(-\sigma^\star_{sl}) + \sum_{ls}(U_v)_{\beta l}(U_v)_{\alpha s}\kappa_{sl}$$

$$|\phi\rangle = e^{\hat{Z}}|\omega_v\rangle = \exp\left(\sum_{\alpha<\beta} Z_{\alpha,\beta}\hat{\gamma}^\dagger_\alpha\hat{\gamma}^\dagger_\beta\right)|\omega_v\rangle.$$

$$|\phi\rangle \in \mathcal{M}_{HFB} \to |\phi'\rangle \stackrel{\text{def}}{=} \exp(\hat{O})|\phi\rangle$$

$$\hat{O} = \sum_{\alpha,\beta=1}^{M} t_{\alpha\beta}\hat{c}_\alpha^\dagger\hat{c}_\beta + \sum_{\alpha>\beta} \Delta_{\alpha\beta}\hat{c}_\alpha^\dagger\hat{c}_\beta^\dagger + \sum_{\alpha>\beta} \tilde{\Delta}_{\alpha\beta}\hat{c}_\alpha\hat{c}_\beta$$

$$\hat{\beta}_l|\phi\rangle = 0, (\hat{\beta}^\dagger\hat{\beta}) = (\hat{c}^\dagger\hat{c})\begin{pmatrix} U & V^\star \\ V & U^\star \end{pmatrix}$$

$$(\hat{\beta}^\dagger\hat{\beta}) = (\hat{\gamma}^\dagger\hat{\gamma})\begin{pmatrix} \mathbb{U} & \mathbb{V}^\star \\ \mathbb{V} & \mathbb{U}^\star \end{pmatrix}$$

$$\hat{\beta}_l'\exp(\hat{O}) = \exp(\hat{O})\hat{\beta}_l$$

$$\hat{\beta}_l'|\phi'\rangle = \hat{\beta}_l'\exp(\hat{O})|\phi\rangle = \exp(\hat{O})\hat{\beta}_l|\phi\rangle = 0$$

$$\hat{\beta}_l = (\hat{c}^\dagger\hat{c})\begin{pmatrix} V_l^\star \\ U_l^\star \end{pmatrix} = (\hat{\gamma}^\dagger \quad \hat{\gamma})\begin{pmatrix} \mathbb{V}_l^\star \\ \mathbb{U}_l^\star \end{pmatrix}, l = 1, \dots, M$$

$$\hat{\beta}_l' = (\hat{c}^\dagger\hat{c})\exp\begin{pmatrix} t & \Delta \\ \tilde{\Delta} & -t^T \end{pmatrix}\begin{pmatrix} V_l^\star \\ U_l^\star \end{pmatrix}$$

$$\begin{pmatrix} \mathbb{V}'^\star \\ \mathbb{U}'^\star \end{pmatrix} = e^{\mathcal{O}}\begin{pmatrix} \mathbb{V}^\star \\ \mathbb{U}^\star \end{pmatrix}$$

$$e^{\mathcal{O}} \stackrel{\text{def}}{=} \begin{pmatrix} U_v^\dagger & V_v^\dagger \\ V_v^T & U_v^T \end{pmatrix}\exp\begin{pmatrix} t & \Delta \\ \tilde{\Delta} & -t^T \end{pmatrix}\begin{pmatrix} U_v & V_v^\star \\ V_v & U_v^\star \end{pmatrix}$$

$$|\phi'\rangle = \alpha e^{\hat{Z}'}|\omega_v\rangle, \hat{Z}' = \sum_{\alpha<\beta} Z'_{\alpha,\beta}\hat{\gamma}_\alpha^\dagger\hat{\gamma}_\beta^\dagger, Z' = (\mathbb{V}'\mathbb{U}'^{-1})^\star$$

$$\exp(\hat{O})|\phi\rangle = \exp(\hat{O})e^{\hat{Z}}|\omega_v\rangle = \alpha e^{\hat{Z}'}|\omega_v\rangle$$

$$\alpha = \langle\omega_v|\exp(\hat{O})|\phi\rangle$$

$$e \stackrel{\mathcal{O}}{=} \begin{pmatrix} \mathbb{K} & \mathbb{M} \\ \mathbb{L} & \mathbb{N} \end{pmatrix}$$

$$\alpha = \sqrt{\det(\mathbb{N})}\langle\tilde{\psi} \mid \phi\rangle$$
$$|\tilde{\psi}\rangle \stackrel{\text{def}}{=} e^{\sum_{\alpha<\beta}(\mathbb{M}\mathbb{N}^{-1})\hat{\gamma}_\alpha^\dagger\hat{\gamma}_\beta^\dagger}|\omega_v\rangle$$

$$\hat{H}_{\text{mf}} = \frac{1}{2}(\hat{c}^\dagger\hat{c})\mathcal{H}_{\text{mf}}\begin{pmatrix} \hat{c} \\ \hat{c}^\dagger \end{pmatrix}$$

$$\mathcal{H}_{mf} = \begin{pmatrix} t & \Delta \\ -\Delta^\star & -t^T \end{pmatrix}$$

$$|\omega_{\text{mf}}\rangle \propto \lim_{\tau\to+\infty}\exp\left(-\tau\left(\hat{H}_{\text{mf}} - E_0\right)\right)|\phi_T\rangle$$

$$|\omega_v\rangle \leftrightarrow \begin{pmatrix} U_v & V_v^\star \\ V_v & U_v^\star \end{pmatrix}$$

$$|\phi_T\rangle \leftrightarrow \begin{pmatrix} U_T & V_T^\star \\ V_T & U_T^\star \end{pmatrix} \leftrightarrow (\mathbb{U}_T, \mathbb{V}_T)$$

$$|\phi_T\rangle = e^{\hat{Z}_{(T)}}|\omega_v\rangle$$
$$\hat{Z}_{(T)} = \sum_{\alpha<\beta} Z_{T\alpha,\beta}\hat{\gamma}_\alpha^\dagger\hat{\gamma}_\beta^\dagger, Z_T = (\mathbb{V}_T\mathbb{U}_T^{-1})^\star$$

$$\tau \to |\phi(\tau)\rangle = \exp\left(-\tau\left(\hat{H}_{mf} - E_0\right)\right)|\phi_T\rangle$$

$$\begin{pmatrix} \mathbb{V}^\star(\tau+\delta\tau) \\ \mathbb{U}^\star(\tau+\delta\tau) \end{pmatrix} = \mathbb{B}_{\delta\tau}\begin{pmatrix} \mathbb{V}^\star(\tau) \\ \mathbb{U}^\star(\tau) \end{pmatrix},$$
$$\begin{pmatrix} \mathbb{V}^\star(\tau=0) \\ \mathbb{U}^\star(\tau=0) \end{pmatrix} = \begin{pmatrix} \mathbb{V}_T^\star \\ \mathbb{U}_T^\star \end{pmatrix}$$

$$\mathbb{B}_{\delta\tau} \stackrel{\text{def}}{=} \begin{pmatrix} U_v^\dagger & V_v^\dagger \\ V_v^T & U_v^T \end{pmatrix} \exp\left(-\delta\tau\mathcal{H}_{mf}\right)\begin{pmatrix} U_v & V_v^\star \\ V_v & U_v^\star \end{pmatrix}$$

$$|\phi(\tau)\rangle = \alpha(\tau)e^{\sum_{\alpha<\beta} Z_{\alpha,\beta}(\tau)\hat{\gamma}_\alpha^\dagger\hat{\gamma}_\beta^\dagger}|\omega_v\rangle$$

$$\begin{pmatrix} \mathbb{U}(\tau) \\ \mathbb{V}(\tau) \end{pmatrix} = \begin{pmatrix} \tilde{\mathbb{U}}(\tau) \\ \tilde{\mathbb{V}}(\tau) \end{pmatrix}\mathbb{R}(\tau)$$

$$Z(\tau) = (\mathbb{V}(\tau)\mathbb{U}^{-1}(\tau))^\star = \left(\tilde{\mathbb{V}}(\tau)\tilde{\mathbb{U}}^{-1}(\tau)\right)^\star$$

$$t_{r,\sigma;r',\sigma'} = \delta_{\sigma,\sigma'}\left(t_{r,r'}^{hop} - \mu\delta_{r,r'}\right)$$
$$-\lambda\delta_{\sigma,-\sigma'}t_{r,r'}^{soc} - \delta_{\sigma,\sigma'}\delta_{r,r'}h_\sigma(r)$$

$$\Delta_{r,\sigma;r',\sigma'} = \delta_{r,r'}\eta(r)\frac{1}{2}\left(\delta_{\sigma,\uparrow}\delta_{\sigma',\downarrow} - \delta_{\sigma,\downarrow}\delta_{\sigma',\uparrow}\right).$$

$$\tau_{r,\uparrow;r,\downarrow}(\tau) = \frac{\langle\phi(\tau)|\hat{c}_{r,\downarrow}\hat{c}_{r,\uparrow}|\phi(\tau)\rangle}{\langle\phi(\tau)\mid\phi(\tau)\rangle},$$

$$\hat{V} = U\sum_r \hat{c}_{r,\uparrow}^\dagger\hat{c}_{r,\uparrow}\hat{c}_{r,\downarrow}^\dagger\hat{c}_{r,\downarrow} \Rightarrow$$
$$U\sum_r \langle\hat{c}_{r,\uparrow}^\dagger\hat{c}_{r,\uparrow}\rangle\hat{c}_{r,\downarrow}^\dagger\hat{c}_{r,\downarrow} + U\sum_r \hat{c}_{r,\uparrow}^\dagger\hat{c}_{r,\uparrow}\langle\hat{c}_{r,\downarrow}^\dagger\hat{c}_{r,\downarrow}\rangle$$
$$+U\sum_r \langle\hat{c}_{r,\uparrow}^\dagger\hat{c}_{r,\downarrow}^\dagger\rangle\hat{c}_{r,\downarrow}\hat{c}_{r,\uparrow} + U\sum_r \hat{c}_{r,\uparrow}^\dagger\hat{c}_{r,\downarrow}^\dagger\langle\hat{c}_{r,\downarrow}\hat{c}_{r,\uparrow}\rangle.$$

$$\hat{H} = \hat{H}_{\text{mf}} + \hat{V}, \hat{V} = U\sum_r \hat{c}_{r,\uparrow}^\dagger\hat{c}_{r,\uparrow}\hat{c}_{r,\downarrow}^\dagger\hat{c}_{r,\downarrow}$$

$$|\Psi_0\rangle \propto \lim_{\tau\to+\infty}\exp\left(-\tau\left(\hat{H} - E_0\right)\right)|\phi_T\rangle$$

$$e^{-\delta\tau U\hat{c}_{r,\uparrow}^{\dagger}\hat{c}_{r,\uparrow}\hat{c}_{r,\downarrow}^{\dagger}\hat{c}_{r,\downarrow}} = e^{-\delta\tau U\left(\hat{c}_{r,\uparrow}^{\dagger}\hat{c}_{r,\uparrow}+\hat{c}_{r,\downarrow}^{\dagger}\hat{c}_{r,\downarrow}-1\right)/2}$$
$$\sum_{x=\pm 1}\frac{1}{2}e^{\gamma x\left(\hat{c}_{r,\uparrow}^{\dagger}\hat{c}_{r,\uparrow}+\hat{c}_{r,\downarrow}^{\dagger}\hat{c}_{r,\downarrow}-1\right)}$$

$$e^{-\delta\tau U\hat{c}_{r,\uparrow}^{\dagger}\hat{c}_{r,\uparrow}\hat{c}_{r,\downarrow}^{\dagger}\hat{c}_{r,\downarrow}} = \sum_{x=\pm 1}\frac{1}{2}e^{\frac{1}{2}(\hat{\mathbf{c}}^{\dagger}\hat{\mathbf{c}})\mathcal{O}_V(r,x)\binom{\hat{\mathbf{c}}}{\hat{\mathbf{c}}^{\dagger}}}$$

$$\mathcal{O}_V(r,x) = \begin{pmatrix} \mathcal{O}_V^{\uparrow\uparrow}(r,x) & 0 & 0 & 0 \\ 0 & \mathcal{O}_V^{\downarrow\downarrow}(r,x) & 0 & 0 \\ 0 & 0 & -\mathcal{O}_V^{\uparrow\uparrow}(r,x) & 0 \\ 0 & 0 & 0 & -\mathcal{O}_V^{\downarrow\downarrow}(r,x) \end{pmatrix}$$

$$\mathcal{O}_V^{\uparrow\uparrow}(r,x)_{r_1,r_2} = \mathcal{O}_V^{\downarrow\downarrow}(r,x)_{r_1,r_2} = \delta_{r_1,r_2}\delta_{r_1,r}\left(-\left(\frac{\delta\tau U}{2}-\gamma x\right)\right)$$

$$e^{-\delta\tau\hat{H}} = e^{\frac{1}{2}(\hat{\mathbf{c}}^{\dagger}\hat{\mathbf{c}})(-\delta\tau\mathcal{H}_{mf})\binom{\hat{\mathbf{c}}}{\hat{\mathbf{c}}^{\dagger}}}$$
$$\prod_r\sum_{x(r)} e^{\frac{1}{2}(\hat{\mathbf{c}}^{\dagger}\hat{\mathbf{c}})\mathcal{O}_V(r,x(r))\binom{\hat{\mathbf{c}}}{\hat{\mathbf{c}}^{\dagger}}} + \mathcal{O}(\delta\tau).$$

$$\frac{\langle\phi(\tau=0)|\hat{c}_{r,\downarrow}\hat{c}_{r,\uparrow}|\phi(\tau)\rangle}{\langle\phi(\tau=0)\mid\phi(\tau)\rangle}$$

$$\hat{O} = \frac{1}{2}(\hat{\gamma}^{\dagger}\hat{\gamma})(\mathcal{O})\binom{\hat{\gamma}}{\hat{\gamma}^{\dagger}}$$

$$\mathcal{O} \stackrel{\text{def}}{=} \begin{pmatrix} \mathcal{T} & \mathcal{A} \\ -\mathcal{A}^{\star} & -\mathcal{T}^{T} \end{pmatrix}$$

$$\exp(\mathcal{O}) \stackrel{\text{def}}{=} \begin{pmatrix} \mathbb{K} & \mathbb{M} \\ \mathbb{L} & \mathbb{N} \end{pmatrix}$$

$$\langle\omega_v|\exp(\hat{O})|\omega_v\rangle = \sqrt{\det(\mathbb{N})}$$

$$\hat{\beta}_l' = \exp(\hat{O})\hat{\beta}_l\exp(-\hat{O})$$

$$\hat{\beta}_l = (\hat{\gamma}^{\dagger}\hat{\gamma})\begin{pmatrix}\mathbb{V}_l^{\star}\\ \mathbb{U}_l^{\star}\end{pmatrix}, l = 1,\dots,M$$

$$\exp(\hat{O})\hat{\gamma}\exp(-\hat{O}) = \hat{\gamma} + [\hat{O},\hat{\gamma}] + \frac{1}{2!}[\hat{O},[\hat{O},\hat{\gamma}]] + \cdots$$

$$\exp(\hat{O})(\hat{\gamma}^{\dagger}\hat{\gamma})\exp(-\hat{O})\begin{pmatrix}\mathbb{V}_l^{\star}\\ \mathbb{U}_l^{\star}\end{pmatrix} = (\hat{\gamma}^{\dagger}\hat{\gamma})\exp(\mathcal{O})\begin{pmatrix}\mathbb{V}_l^{\star}\\ \mathbb{U}_l^{\star}\end{pmatrix}$$

$$\hat{\beta}_l = \hat{\gamma}_l, \begin{pmatrix} \mathbb{V}_l^\star \\ \mathbb{U}_l^\star \end{pmatrix} = \begin{pmatrix} 0 \\ \dots \\ 0 \\ 0 \\ \dots \\ 0 \\ 1 \\ 0 \\ \dots \\ 0 \end{pmatrix}$$

$$\exp(\hat{O})\hat{\gamma}_l \exp(-\hat{O}) = \sum_{j=1}^{M} \hat{\gamma}_j^\dagger \mathbb{M}_{jl} + \sum_{j=1}^{M} \hat{\gamma}_j \mathbb{N}_{jl}$$

$$\exp(\hat{O})\hat{\gamma}_l^\dagger \exp(-\hat{O}) = \sum_{j=1}^{M} \hat{\gamma}_j^\dagger \mathbb{K}_{jl} + \sum_{j=1}^{M} \hat{\gamma}_j \mathbb{L}_{jl}$$

$$\mathcal{W}(\boldsymbol{\theta}) \stackrel{\text{def}}{=} \exp(\boldsymbol{\theta}\mathcal{O}) \stackrel{\text{def}}{=} \begin{pmatrix} \mathbb{K}(\boldsymbol{\theta}) & \mathbb{M}(\boldsymbol{\theta}) \\ \mathbb{L}(\boldsymbol{\theta}) & \mathbb{N}(\boldsymbol{\theta}) \end{pmatrix}$$

$$(\theta)\exp(\theta\hat{O})\hat{\gamma}_l \exp(-\theta\hat{O}) = \sum_{j=1}^{M} \hat{\gamma}_j^\dagger \mathbb{M}_{jl}(\theta) + \sum_{j=1}^{M} \hat{\gamma}_j \mathbb{N}_{jl}(\theta)$$

$$\exp(\theta\hat{O})\hat{\gamma}_l^\dagger \exp(-\theta\hat{O}) = \sum_{j=1}^{M} \hat{\gamma}_j^\dagger \mathbb{K}_{jl}(\theta) + \sum_{j=1}^{M} \hat{\gamma}_j \mathbb{L}_{jl}(\theta)$$

$$\langle \hat{O}_1 e^{\theta\hat{O}} \hat{\gamma}_l \hat{O}_2 \rangle = \left\langle \hat{O}_1 \sum_j \left(\hat{\gamma}_j^\dagger \mathbb{M}_{jl}(\theta) + \hat{\gamma}_j \mathbb{N}_{jl}(\theta)\right) e^{\theta\hat{O}} \hat{O}_2 \right\rangle$$

$$\langle \hat{O}_1 e^{\theta\hat{O}} \hat{\gamma}_l^\dagger \hat{O}_2 \rangle = \left\langle \hat{O}_1 \sum_j \left(\hat{\gamma}_j^\dagger \mathbb{K}_{jl}(\theta) + \hat{\gamma}_j \mathbb{L}_{jl}(\theta)\right) e^{\theta\hat{O}} \hat{O}_2 \right\rangle$$

$$\sum_l \langle \hat{O}_1 e^{\theta\hat{O}} \hat{\gamma}_l \hat{O}_2 \rangle (\mathbb{N}^{-1}\mathbb{L})_{l,s}$$

$$= \sum_l \left\langle \hat{O}_1 \sum_j \left(\hat{\gamma}_j^\dagger \mathbb{M}_{jl}(\theta)\right) e^{\theta\hat{O}} \hat{O}_2 \right\rangle (\mathbb{N}^{-1}\mathbb{L})_{l,s}$$

$$+ \left\langle \hat{O}_1 \sum_j \left(\hat{\gamma}_j\right) e^{\theta\hat{O}} \hat{O}_2 \right\rangle \mathbb{L}_{j,s}$$

$$\langle \hat{O}_1 e^{\theta\hat{O}} \hat{\gamma}_s^\dagger \hat{O}_2 \rangle$$
$$= \left\langle \hat{O}_1 \sum_j \left(\hat{\gamma}_j^\dagger \mathbb{K}_{js}(\theta)\right) e^{\theta\hat{O}} \hat{O}_2 \right\rangle$$
$$+ \sum_l \langle \hat{O}_1 e^{\theta\hat{O}} \hat{\gamma}_l \hat{O}_2 \rangle (\mathbb{N}^{-1}\mathbb{L})_{l,s}$$
$$- \sum_l \left\langle \hat{O}_1 \sum_j \left(\hat{\gamma}_j^\dagger \mathbb{M}_{jl}(\theta)\right) e^{\theta\hat{O}} \hat{O}_2 \right\rangle (\mathbb{N}^{-1}\mathbb{L})_{l,s}$$

$$\langle e^{\theta\hat{O}} \hat{\gamma}_s^\dagger \hat{\gamma}_{s'}^\dagger \rangle = \langle e^{\theta\hat{O}} \rangle (\mathbb{N}^{-1}\mathbb{L})_{s',s}$$

$$\frac{d}{d\theta} \langle e^{\theta\hat{O}} \rangle = \langle e^{\theta\hat{O}} \hat{O} \rangle$$

$$\frac{d}{d\theta} \langle e^{\theta\hat{O}} \rangle = \langle e^{\theta\hat{O}} \hat{O} \rangle$$
$$= \frac{1}{2} \sum_{s,s'} \langle e^{\theta\hat{O}} \mathcal{A}_{s,s'} \hat{\gamma}_s^\dagger \hat{\gamma}_{s'}^\dagger \rangle + \frac{1}{2} \sum_{s,s'} \langle e^{\theta\hat{O}} (-\mathcal{T}^T)_{s,s'} \hat{\gamma}_s \hat{\gamma}_{s'}^\dagger \rangle$$
$$= \frac{1}{2} \sum_{s,s'} \mathcal{A}_{s,s'} \langle e^{\theta\hat{O}} \rangle (\mathbb{N}^{-1}\mathbb{L})_{s',s} - \frac{1}{2} \mathrm{Tr}(\mathcal{T}) \langle e^{\theta\hat{O}} \rangle$$
$$= \langle e^{\theta\hat{O}} \rangle \frac{1}{2} (\mathrm{Tr}(\mathcal{A}\mathbb{N}^{-1}\mathbb{L}) - \mathrm{Tr}(\mathcal{T}))$$

$$\mathcal{O} \stackrel{\text{def}}{=} \begin{pmatrix} \mathcal{T} & \mathcal{A} \\ -\mathcal{A}^\star & -\mathcal{T}^T \end{pmatrix}$$

$$\mathcal{W}(\theta + \varphi) = e^{(\theta+\varphi)\hat{O}} = \mathcal{W}(\theta)\mathcal{W}(\varphi)$$

$$\mathcal{W}'(\theta) = \mathcal{W}(\theta)\mathcal{W}'(0)$$

$$\mathbb{N}'(\theta) = \mathbb{L}(\theta)\mathbb{M}'(0) + \mathbb{N}(\theta)\mathbb{N}'(0)$$

$$\mathcal{W}'(0) = \frac{d}{d\varphi} e^{\varphi\mathcal{O}} \Big|_{\varphi=0} = \mathcal{O}$$

$$\mathbb{N}(\theta)^{-1}\mathbb{N}'(\theta) = \mathbb{N}(\theta)^{-1}\mathbb{L}(\theta)\mathcal{A} - \mathcal{T}^T$$

$$\mathrm{Tr}(\mathcal{A}\mathbb{N}(\theta)^{-1}\mathbb{L}(\theta)) = \mathrm{Tr}(\mathbb{N}(\theta)^{-1}\mathbb{N}'(\theta)) + \mathrm{Tr}(\mathcal{T})$$

$$\mathrm{Tr}(\mathbb{N}(\theta)^{-1}\mathbb{N}'(\theta)) = \frac{d}{d\theta} \mathrm{Tr}(\log\ \mathbb{N}(\theta))$$

$$\frac{d}{d\theta} \langle e^{\theta\hat{O}} \rangle = \langle e^{\theta\hat{O}} \rangle \frac{1}{2} \left(\frac{d}{d\theta} \mathrm{Tr}(\log\ \mathbb{N}(\theta)) \right)$$

$$\frac{d}{d\theta} \log\left(\langle e^{\theta\hat{O}} \rangle\right) = \frac{1}{2} \left(\frac{d}{d\theta} \mathrm{Tr}(\log\ \mathbb{N}(\theta)) \right)$$

$$\langle e^{\theta\hat{O}}\rangle = \exp\left(\frac{1}{2}\mathrm{Tr}(\log\,\mathbb{N}(\theta))\right)$$

$$\exp\,(\hat{O})|\omega_v\rangle = \sqrt{\det(\mathbb{N})}\exp\left(\frac{1}{2}\sum_{s,s'}\,(\mathbb{M}\mathbb{N}^{-1})_{s,s'}\hat{\gamma}_s^\dagger\hat{\gamma}_{s'}^\dagger\right)|\omega_v\rangle$$

$$\exp\left(\frac{1}{2}(\hat{\gamma}^\dagger\hat{\gamma})(\mathcal{O})\begin{pmatrix}\hat{\gamma}\\ \hat{\gamma}^\dagger\end{pmatrix}\right)$$

$$= \alpha e^{\frac{1}{2}\Sigma_{s,s'}\,\mathbb{Z}_{s,s'}\hat{\gamma}_s^\dagger\hat{\gamma}_{s'}^\dagger}e^{\Sigma_{s,s'}\,\mathbb{X}_{s,s'}\hat{\gamma}_s^\dagger\hat{\gamma}_{s'}}e^{\Sigma_{s,s'}\,\mathbb{Y}_{s,s'}\hat{\gamma}_s\hat{\gamma}_{s'}}$$

$$\alpha = \langle e^{\hat{O}}\rangle = \sqrt{\det(\mathbb{N})}$$

$$e^{\hat{O}}|\omega_v\rangle = \alpha e^{\frac{1}{2}\Sigma_{s,s'}\mathbb{Z}_{s,s'}\hat{\gamma}_s^\dagger\hat{\gamma}_{s'}^\dagger}|\omega_v\rangle$$

$$\langle\hat{\gamma}_{s'}e^{\theta\hat{O}}\hat{\gamma}_l\rangle = \left\langle\hat{\gamma}_{s'}\sum_j\,\left(\hat{\gamma}_j^\dagger\mathbb{M}_{jl}(\theta) + \hat{\gamma}_j\mathbb{N}_{jl}(\theta)\right)e^{\theta\hat{O}}\right\rangle$$

$$\left\langle\hat{\gamma}_{s'}\sum_j\,\left(\hat{\gamma}_j^\dagger\mathbb{M}_{jl}(\theta)\right)e^{\theta\hat{O}}\right\rangle = -\left\langle\hat{\gamma}_{s'}\sum_j\,\left(\hat{\gamma}_j\mathbb{N}_{jl}(\theta)\right)e^{\theta\hat{O}}\right\rangle$$

$$\langle\hat{\gamma}_{s'}\hat{\gamma}_s e^{\theta\hat{O}}\rangle = -\left\langle\hat{\gamma}_{s'}\sum_j\,\left(\hat{\gamma}_j^\dagger(\mathbb{M}(\theta)\mathbb{N}^{-1}(\theta))_{js}\right)e^{\theta\hat{O}}\right\rangle$$

$$= -(\mathbb{M}(\theta)\mathbb{N}^{-1}(\theta))_{s',s}\langle e^{\theta\hat{O}}\rangle$$

$$-(\mathbb{M}(\theta)\mathbb{N}^{-1}(\theta))_{s',s} = \frac{\langle\hat{\gamma}_{s'}\hat{\gamma}_s e^{\theta\hat{O}}\rangle}{\langle e^{\theta\hat{O}}\rangle} = \left\langle\hat{\gamma}_{s'}\hat{\gamma}_s e^{\frac{1}{2}\Sigma\,\mathbb{Z}_{l,l'}\hat{\gamma}_l^\dagger\hat{\gamma}_{l'}^\dagger}\right\rangle$$

$$\left\langle\hat{\gamma}_{s'}\hat{\gamma}_s e^{\frac{1}{2}\Sigma\,\mathbb{Z}_{l,l'}\hat{\gamma}_l^\dagger\hat{\gamma}_{l'}^\dagger}\right\rangle = \left\langle\hat{\gamma}_{s'}\hat{\gamma}_s\frac{1}{2}\sum_{l,l'}\,\mathbb{Z}_{l,l'}\hat{\gamma}_l^\dagger\hat{\gamma}_{l'}^\dagger\right\rangle$$

$$= \frac{1}{2}\sum_{l,l'}\,\mathbb{Z}_{l,l'}\left(\delta_{s,l}\delta_{s',l'} - \delta_{s',l}\delta_{s,l'}\right) = \frac{1}{2}\left(\mathbb{Z}_{s,s'} - \mathbb{Z}_{s',s}\right)$$

$$\sum_{l,l'}\,\mathbb{Z}_{l,l'}\hat{\gamma}_l^\dagger\hat{\gamma}_{l'}^\dagger = \frac{1}{2}\left(\mathbb{Z}_{l,l'}\hat{\gamma}_l^\dagger\hat{\gamma}_{l'}^\dagger - \mathbb{Z}_{l,l'}\hat{\gamma}_{l'}^\dagger\hat{\gamma}_l^\dagger\right)$$

$$H^M = \int\,d\vec{r}\left[\frac{1}{2}(\vec{\nabla}\sigma)^2 + V(\sigma)\right] - \frac{1}{2}\int\,d\vec{r}\left[(\vec{\nabla}\omega)^2 + m_\omega^2\omega^2\right]$$

$$V(\sigma) = \frac{1}{2}m_\sigma^2\sigma^2 + \frac{\lambda_3}{3!}(g_\sigma\sigma)^3 + \frac{\lambda_4}{4!}(g_\sigma\sigma)^4$$

$$H^B = \frac{1}{\mathcal{V}} \int \; d^3\mathbf{r} \sum_{\mathbf{k}\mathbf{k}'} \; e^{i(\mathbf{k}-\mathbf{k}')\cdot\mathbf{r}} a_{\mathbf{k}}^{\dagger} a_{\mathbf{k}'} K(\mathbf{k}, \mathbf{k}', \sigma, \omega)$$

$$\frac{1}{\mathcal{V}} \sum_{\mathbf{k}} \; \rightarrow \frac{2}{(2\pi)^3} \int \; d\mathbf{k}$$

$$K(\mathbf{k}, \mathbf{k}', \sigma, \omega) = \frac{1}{2}\left(\sqrt{\mathbf{k}^2 + M(\sigma)^2} + \sqrt{\mathbf{k}'^2 + M(\sigma)^2}\right) + g_\omega \omega$$

$$M(\sigma) = M - g_\sigma \sigma + \frac{d}{2}(g_\sigma \sigma)^2$$

$$Z(\mathcal{V}, \beta, \mu) = \mathrm{Tr} e^{-\beta(H-\mu N)} = e^{-\beta\Phi}$$

$$\sigma = \bar{\sigma} + \sum_{\mathbf{q}\neq 0} \; e^{i\mathbf{q}\cdot\mathbf{r}} \delta\sigma_{\mathbf{q}}$$

$$\omega = \bar{\omega} + \sum_{\mathbf{q}\neq 0} \; e^{i\mathbf{q}\cdot\mathbf{r}} \delta\omega_{\mathbf{q}}$$

$$\int \; D\sigma D\omega = \int \; d\bar{\sigma} d\bar{\omega} \int \; \prod_{\mathbf{q}} \; \delta\sigma_{\mathbf{q}} \prod_{\mathbf{q}'} \; \delta\omega_{\mathbf{q}'}$$

$$H^M = \mathcal{V}\left[V(\bar{\sigma}) + \frac{1}{2}\sum_{\mathbf{q}} \; \delta\sigma_{\mathbf{q}}^2 \left(\mathbf{q}^2 + \frac{d^2 V}{d\sigma^2}\right)\right]$$
$$-\mathcal{V}\left[\frac{m_\omega^2}{2}\bar{\omega}^2 + \frac{1}{2}\sum_{\mathbf{q}} \; \delta\omega_{\mathbf{q}}^2 (\mathbf{q}^2 + m_\omega^2)\right]$$

$$H^B = H_0 + \sum_{\mathbf{q}\neq 0} \left(H_{\mathbf{q}}^{\sigma} \delta\sigma_{\mathbf{q}} + H_{\mathbf{q}}^{\omega} \delta\omega_{\mathbf{q}}\right) + \sum_{\mathbf{q}\mathbf{q}'\neq 0} \; H_{\mathbf{q}-\mathbf{q}'}^{m} \delta\sigma_{\mathbf{q}} \delta\sigma_{\mathbf{q}'}$$

$$H_0 = \sum_{\mathbf{k}} \; K^{\mathbf{k}\mathbf{k}}(\bar{\sigma}, \bar{\omega}) a_{\mathbf{k}}^{\dagger} a_{\mathbf{k}}$$
$$H_{\mathbf{q}}^{\sigma} = \frac{1}{2}\sum_{\mathbf{k}} \; \left(a_{\mathbf{k}}^{\dagger} a_{\mathbf{k}+\mathbf{q}} \frac{\partial K^{\mathbf{k}\mathbf{k}+\mathbf{q}}}{\partial\sigma} + \mathbf{q} \rightarrow -\mathbf{q}\right),$$
$$H_{\mathbf{q}\mathbf{q}'}^{m} = \frac{1}{2}\sum_{\mathbf{k}} \; a_{\mathbf{k}}^{\dagger} a_{\mathbf{k}+\mathbf{q}+\mathbf{q}'} \frac{\partial^2 K^{\mathbf{k}+\mathbf{q}+\mathbf{q}'}}{\partial\sigma^2},$$
$$H_{\mathbf{q}}^{\omega} = \frac{1}{2}\sum_{\mathbf{k}} \; \left(a_{\mathbf{k}}^{\dagger} a_{\mathbf{k}+\mathbf{q}} \frac{\partial K^{\mathbf{k}\mathbf{k}+\mathbf{q}}}{\partial\omega} + \mathbf{q} \rightarrow -\mathbf{q}\right).$$

$$H-\mu N=\mathcal{V}\left(V(\bar{\sigma})-\frac{m_\omega^2\bar{\omega}}{2}\right)+\sum_{\mathbf{k}} K^{\mathbf{kk}}(\bar{\sigma},\bar{\omega})a_{\mathbf{k}}^{\dagger}a_{\mathbf{k}}-\mu N$$

$$+\frac{\mathcal{V}}{2}\left(\sum_{\mathbf{q}\neq 0}\delta\sigma_{\mathbf{q}}^2\left(\mathbf{q}^2+\frac{d^2V}{d\sigma^2}\right)-\sum_{\mathbf{q}\neq 0}\delta\omega_{\mathbf{q}}^2(\mathbf{q}^2+m_\omega^2)\right)$$

$$+\sum_{\mathbf{q}\neq 0}\left(\tilde{H}_{\mathbf{q}}^{\sigma}\delta\sigma_{\mathbf{q}}+\tilde{H}_{\mathbf{q}}^{\omega}\delta\omega_{\mathbf{q}}\right)+\sum_{\mathbf{q}\mathbf{q}'\neq 0}H_{\mathbf{q}-\mathbf{q}'}^{m}\delta\sigma_{\mathbf{q}}\delta\sigma_{\mathbf{q}'}$$

$$Z_{\delta\sigma}=\int\prod_{\mathbf{q}}\delta\sigma_{\mathbf{q}}e^{-\beta S}$$

$$S=\frac{\mathcal{V}}{2}\sum_{\mathbf{q}\neq 0}\delta\sigma_{\mathbf{q}}^2\left(\mathbf{q}^2+\frac{d^2V}{d\sigma^2}\right)+\sum_{\mathbf{q}\mathbf{q}'\neq 0}H_{\mathbf{q}-\mathbf{q}'}^{m}\delta\sigma_{\mathbf{q}}\delta\sigma_{\mathbf{q}'}+\sum_{\mathbf{q}\neq 0}H_{\mathbf{q}}^{\sigma}\delta\sigma_{\mathbf{q}}\cdots$$

$$\sum_{\mathbf{q}'}\left[\frac{\mathcal{V}}{2}\left(\mathbf{q}^2+\frac{d^2V}{d\sigma^2}\right)\delta(\mathbf{q},\mathbf{q}')+H_{\mathbf{q}-\mathbf{q}'}^{m}\right]\delta\sigma_{\mathbf{q}'}=\alpha(\mathbf{q})\delta\sigma_{\mathbf{q}}$$

$$S=\sum_{\mathbf{q}\neq 0}\alpha(\mathbf{q})\delta\sigma_{\mathbf{q}}^2+H_{\mathbf{q}}^{\sigma}\delta\sigma_{\mathbf{q}}=\sum_{\mathbf{q}\neq 0}\left[\sqrt{\alpha(\mathbf{q})}\delta\sigma_{\mathbf{q}}+\frac{H_{\mathbf{q}}^{\sigma}}{2\sqrt{(\alpha(\mathbf{q})}}\right]^2-\sum_{\mathbf{q}\neq 0}\left(\frac{H_{\mathbf{q}}^{\sigma}}{2\sqrt{(\alpha(\mathbf{q})}}\right)^2.$$

$$Z_{\delta\sigma}=e^{-\beta H_{\delta\sigma}}$$

$$H_{\delta\sigma}=-\sum_{\mathbf{q}\neq 0}\left(\frac{H_{\mathbf{q}}^{\sigma}}{2\sqrt{(\alpha(\mathbf{q})}}\right)^2$$

$$\alpha(q)\sim\frac{\mathcal{V}}{2}\left(q^2+\frac{d^2V}{d\sigma^2}\right)+H_{q-q}=\frac{\mathcal{V}}{2}\left(q^2+\frac{d^2V}{d\sigma^2}+\frac{1}{\mathcal{V}}\sum a_k^{\dagger}a_k\frac{\partial^2K^{kk}}{\partial\sigma^2}\right).$$

$$\tilde{m}_\sigma^2=m_\sigma^2+\lambda_3\bar{\sigma}+\frac{1}{\mathcal{V}}\sum a_k^{\dagger}a_k\frac{\partial^2K^{kk}}{\partial\sigma^2}$$

$$H_{\delta\sigma}=-\frac{1}{2\mathcal{V}}\sum_{\mathbf{q}\neq 0}\frac{\left(H_{\mathbf{q}}^{\sigma}\right)^2}{\mathbf{q}^2+m_\sigma^2}$$

$$Z=\int d\bar{\sigma}d\bar{\omega}\sum_n\langle n|e^{-\beta\left(H_{mean}+H_{fluc}-\mu N\right)}|n\rangle$$

$$H_{\text{mean}}=E_{\text{meson}}+H_0$$

$$H_0=\sum_{\mathbf{k}}K^{\mathbf{kk}}(\bar{\sigma},\bar{\omega})a_{\mathbf{k}}^{\dagger}a_{\mathbf{k}}$$

$$E_{\text{meson}}=\mathcal{V}\left(V(\bar{\sigma})-\frac{m_\omega^2\bar{\omega}^2}{2}\right)$$

$$H_{\text{fluc}}=-\frac{1}{2\mathcal{V}}\sum_{\mathbf{q}\neq 0}\frac{\left(H_{\mathbf{q}}^{\sigma}\right)^2}{\mathbf{q}^2+m_\sigma^2}+\frac{1}{2\mathcal{V}}\sum_{\mathbf{q}}\frac{\left(H_{\mathbf{q}}^{\omega}\right)^2}{q^2+m_\omega^2}.$$

$$H_0 + H_{fluc} = \sum_{\mathbf{k}} e(k) a_{\mathbf{k}}^{\dagger} a_{\mathbf{k}} + \delta H$$

$$\delta H = \sum_{\mathbf{k}} [K(\mathbf{k}) - e(\mathbf{k})] a_{\mathbf{k}}^{\dagger} a_{\mathbf{k}} + H_{fluc}$$

$$Z = \exp - \beta(\Phi_B + E_{meson})$$

$$\Phi_B = \Phi_{B0} + \sum_{\mathbf{k}} n(\mathbf{k})[K(\mathbf{k}) - e(\mathbf{k})] + \frac{1}{4\mathcal{V}} \sum_{\mathbf{k}\mathbf{k}'} n(\mathbf{k}) n(\mathbf{k}') \left[\frac{1}{(\mathbf{k}-\mathbf{k}')^2 + m_\sigma^2} \left(\frac{\partial K^{kk'}}{\partial \sigma} \right)^2 - \frac{1}{(\mathbf{k}-\mathbf{k}')^2 + m_\omega^2} g_\omega^2 \right]$$

$$\Phi_B = \Phi_{B0} + \frac{2\mathcal{V}}{(2\pi)^3} \sum_f \int d\vec{k} n(k,f)[K(k,f) - e(k,f)] + \frac{\mathcal{V}}{(2\pi)^6} \sum_{ff'} \int d\vec{k} d\vec{q} n(k,f) n(q,f') W^{ff'}(\vec{k},\vec{q})$$

$$\Phi_{B0} = -\frac{\mathcal{V}}{\beta} \frac{2}{(2\pi)^3} \sum_f \int d\vec{k} \ln\left(1 + e^{-\beta(e(k,f) - \mu(f))}\right)$$

$$n(k,f) = \frac{1}{1 + \exp\left[\beta(e(k,f) - \mu(f)\right]}$$

$$K(k,f) = \sqrt{k^2 + M_f^2(\bar{\sigma})} + g_\omega^f \bar{\omega} + g_\rho m(f) \bar{b}_3$$

$$E_{\text{meson}} = \mathcal{V}\left(V(\bar{\sigma}) - \frac{m_\omega^2 \bar{\omega}^2}{2} - \frac{m_\rho^2 \bar{b}_3^3}{2} \right)$$

$$W^{ff'}(\vec{k},\vec{q}) = \delta(f,f') \left[\frac{1}{(\vec{k}-\vec{q})^2 + m_\sigma^2} \left(\frac{\partial K_f^{kq}}{\partial \sigma} \right)^2 - \frac{1}{(\vec{k}-\vec{q})^2 + m_\omega^2} \left(g_\omega^f\right)^2 \right] - G_\rho S(f,f') \frac{m_\rho^2}{(\vec{k}-\vec{q})^2 + m_\rho^2} - \left(\frac{g_A}{2f_\pi}\right)^2 \Pi(f,f') \frac{m_\pi^2}{(\vec{k}-\vec{q})^2 + m_\pi^2}$$

$$S_{ff'} = \delta_{mm'} m^2 + t\left(\delta_{m,m'+1} + \delta_{m',m+1}\right)$$

$$\frac{\delta \Phi}{\delta e(p,m)} = 0$$

$$\frac{\delta \Phi}{\delta e(p,m)} = \frac{2}{(2\pi)^3} \sum_f \int d\vec{k} \frac{\delta n(k,f)}{\delta e(p,m)} \left[K(k,f) - e(k,f) + \frac{1}{(2\pi)^3} \sum_{f'} \int d\vec{q} n(q,f') W^{ff'}(\vec{k},\vec{q}) \right]$$

$$e(k,f) = K(k,f) + \frac{1}{(2\pi)^3} \sum_{f'} \int d\vec{q} n(q,f') W^{ff'}(k\hat{z},\vec{q})$$

$$\Phi_B = \Phi_{B0} - \frac{\mathcal{V}}{(2\pi)^6}\sum_{ff'}\int d\vec{k}d\vec{q}n(k,f)n(q,f')W^{ff'}(\vec{k},\vec{q})$$
$$= \Phi_{B0} + \frac{\mathcal{V}}{(2\pi)^3}\sum_{f}\int d\vec{k}n(k,f)[K(k,f) - e(k,f)]$$

$$e(T) = K + F[e(T),T]$$

$$e^{(n+1)}(T) = K + F\left[e^{(n)}(T),T\right]$$

$$W^{ff'}(\vec{k},\vec{q}) \to W^{ff'}(\vec{k},\vec{q})\left(\frac{M_r^2}{(M_r^2 + (\vec{k}-\vec{q})^2}\right)^2$$

$$e^{(0)}(T + \Delta T) = e(T)$$

$$e(k,f) = K(k,f) + \frac{1}{(2\pi)^3}\sum_{f'}\int_0^{k_F(f')} d\vec{q}W^{ff'}(k\hat{z},\vec{q})$$

$$e(k_F(f),f) = \mu(f)$$

$$\mu(f) = K(k_F(f),f) + \frac{1}{(2\pi)^3}\sum_{f'}\int_0^{k_F(f')} d\vec{q}W^{ff'}(k_F\hat{z},\vec{q})$$

$$Z = \int d\bar{\sigma}d\bar{\omega}d\bar{b}_3 e^{-\beta(E_{meson}+\Phi_B)}$$

$$Z \sim e^{-\beta(E_{meson}+\Phi_B)_{saddle}},$$

$$\frac{d}{d\bar{\sigma}}(E_{meson} + \Phi_B) = 0$$

$$\frac{d}{d\bar{\sigma}}(E_{\text{meson}} + \Phi_B) = 0$$
$$\frac{d}{d\bar{\omega}}(E_{\text{meson}} + \Phi_B) = 0 \ (19)$$
$$\frac{d}{d\bar{b}_3}(E_{\text{meson}} + \Phi_B) = 0.(19)$$

$$\frac{d}{d\bar{\sigma}}\Phi_B = \frac{2\mathcal{V}}{(2\pi)^3}\sum_{f}\int d\vec{k}n(k,f)\frac{d}{d\bar{\sigma}}K(k,f) +$$
$$\frac{\mathcal{V}}{(2\pi)^6}\sum_{ff'}\int d\vec{k}d\vec{q}n(k,f)n(q,f')\frac{dW^{ff'}(\vec{k},\vec{q})}{d\bar{\sigma}}$$

$$\frac{dV(\bar{\sigma})}{d\bar{\sigma}} + \frac{2}{(2\pi)^3}\sum_f \int d\vec{k} n(k,f)\frac{d}{d\bar{\sigma}}K(k,f) +$$

$$\frac{1}{(2\pi)^6}\sum_{ff'} \int d\vec{k}d\vec{q} n(k,f)n(q,f')\frac{dW^{ff'}(\vec{k},\vec{q})}{d\bar{\sigma}} = 0$$

$$-m_\omega^2\bar{\omega} + \frac{2}{(2\pi)^3}\sum_f g_\omega^f \int d\vec{k} n(k,f) = 0$$

$$-m_\rho^2\bar{b}_3 + g_\rho\frac{2}{(2\pi)^3}\sum_f m(f)\int d\vec{k} n(k,f) = 0$$

$$\langle N(f)\rangle = -\frac{\partial\Phi}{\partial\mu(f)}$$

$$\frac{\partial\Phi}{\partial\mu(f)} = \frac{\partial\Phi_{B0}}{\partial\mu(f)}$$

$$\frac{\partial\Phi}{\partial\beta} = \frac{\partial\Phi_{B0}}{\partial\beta}$$

$$\langle N(f)\rangle = -\frac{\partial\Phi_{B0}}{\partial\mu(f)} = \frac{2\mathcal{V}}{(2\pi)^3}\int d\vec{k} n(k,f)$$

$$\frac{\partial}{\partial\beta}\Phi = \frac{\partial}{\partial\beta}\Phi_{B0} = -\frac{1}{\beta}\Phi_{B0} + \frac{1}{\beta}\frac{2\mathcal{V}}{(2\pi)^3}\sum_f \int d\vec{k} n(k,f)(e(k,f) - \mu(f))$$

$$\langle S\rangle = \frac{\partial}{\partial T}T\ln Z = \beta^2\frac{\partial}{\partial\beta}\Phi = \beta^2\frac{\partial}{\partial\beta}\Phi_{B0}$$
$$= \mathcal{V}\beta\frac{2}{(2\pi)^3}\sum_f \int d\vec{k}\left[\frac{1}{\beta}\ln\left(1 + e^{-\beta(e(k,f)-\mu(f))}\right) + n(k,f)(e(k,f) - \mu(f))\right]$$

$$\langle E - \mu N\rangle = -\frac{\partial}{\partial\beta}\ln Z = \Phi + \beta\frac{\partial}{\partial\beta}\Phi$$

$$\langle E - \mu N\rangle = \Phi - \Phi_{B0} + \frac{2\mathcal{V}}{(2\pi)^3}\sum_f \int d\vec{k} n(k,f)(e(k,f) - \mu(f))$$
$$= E_{\text{mesons}} + \frac{\mathcal{V}}{(2\pi)^3}\sum_f \int d\vec{k} n(k,f)[K(k,f) - e(k,f)] +$$
$$\frac{2\mathcal{V}}{(2\pi)^3}\sum_f \int d\vec{k} n(k,f)(e(k,f) - \mu(f))$$

$$\langle E\rangle = E_{\text{mesons}} + \frac{\mathcal{V}}{(2\pi)^3}\sum_f \int d\vec{k} n(k,f)[K(k,f) + e(k,f)]$$

$$\langle E\rangle = \Phi + T\langle S\rangle + \mu\langle N\rangle = -P + T\langle S\rangle + \mu\langle N\rangle$$

$$\mu(\mu^-) = \mu(e^-)$$
$$\mu_i - \mu_n = -\mu(e^-)Q_i, i = p, \Lambda, \ldots$$

$$n(e^+) - n(e^-) + n(\mu^+) - n(\mu^-) = -\sum_i \rho_i Q_i$$

$$\sum_i \rho_i = \rho_B$$

$$\mu(e^-) - \mu(\nu_e) = \mu(\mu^-) - \mu(\nu_\nu)$$
$$\mu_i - \mu_n = -[\mu(e^-) - \mu(\nu_e)]Q_i$$

$$n(e^-) + n(\nu_e) - n(e^+) - n(\bar{\nu}_e) = L_e$$
$$e \to \mu = L_\mu$$
$$n(e^+) - n(e^-) + n(\mu^+) - n(\mu^-) = -\sum_i \rho_i Q_i$$

$$\sum_i \rho_i = \rho_B.$$

$$H := -\sum_{i=1}^{N} \Delta_{x_i} + \lambda \sum_{1 \le i < j \le N} V(x_i - x_j), \lambda \in \mathbb{R},$$

$$\psi(x_1, x_2, \dots, x_N) = \operatorname{sgn}(\sigma)\psi\left(x_{\sigma(1)}, x_{\sigma(2)}, \dots, x_{\sigma(N)}\right) \text{ for } \sigma \in \mathcal{S}_N$$

$$i\frac{\mathrm{d}\psi}{\mathrm{d}t}(t) = H\psi(t), \psi(0) = \psi_0$$

$$\psi(x_1, x_2, \dots x_N) := (N!)^{-1/2} \det\left(f_j(x_i)\right), \text{ with } f_j(x) := (2\pi)^{-3/2} e^{ik_j \cdot x} \text{ for } x \in \mathbb{T}^3.$$

$$\langle \psi, H\psi \rangle = \sum_{k \in B_{\mathrm{F}}} |k|^2 \sim N^{5/3}$$

$$\lambda := N^{-1/3}.$$

$$iN^{1/3}\frac{\mathrm{d}\psi}{\mathrm{d}t}(t) = \left[\sum_{i=1}^{N} -\Delta_{x_i} + N^{-1/3} \sum_{1 \le i < j \le N} V(x_i - x_j)\right]\psi(t).$$

$$\hbar := N^{-1/3}$$

$$i\hbar\frac{\mathrm{d}\psi}{\mathrm{d}t}(t) = \left[\sum_{i=1}^{N} -\hbar^2\Delta_{x_i} + \frac{1}{N} \sum_{1 \le i < j \le N} V(x_i - x_j)\right]\psi(t).$$

$$\langle \psi, A\psi \rangle = \operatorname{tr}_N(|\psi\rangle\langle\psi| A)$$

$$\frac{1}{N}\sum_{j=1}^{N} \langle \psi, a_j\psi \rangle = \langle \psi, a_1\psi \rangle = \operatorname{tr}_1\left((\operatorname{tr}_{N-1}|\psi\rangle\langle\psi|)a\right)$$

$$N\operatorname{tr}_{N-1}|\psi\rangle\langle\psi| =: \gamma_\psi^{(1)}$$

$$\gamma_\psi^{(1)} = \sum_{j\in\mathbb{N}} \lambda_j |\varphi_j\rangle\langle\varphi_j|, \varphi_j \in L^2(\mathbb{R}^3), \lambda_j \in \mathbb{R}.$$

$$\gamma_\psi^{(1)}(x;x') := \sum_{j\in\mathbb{N}} \lambda_j \varphi_j(x)\overline{\varphi_j(x')}, \gamma_\psi^{(1)}(x;x) := \sum_{j\in\mathbb{N}} \lambda_j |\varphi_j(x)|^2.$$

$$\psi(x_1, x_2, \dots x_N) = (N!)^{-1/2}\det\left(\varphi_j(x_i)\right) \text{ with arbitrary } \varphi_j \in L^2(\mathbb{R}^3),$$

$$\gamma_\psi^{(1)} = \sum_{j=1}^{N} |\varphi_j\rangle\langle\varphi_j|.$$

$$\frac{\partial f}{\partial t}(t) + 2p \cdot \nabla_x f(t) = -F(f(t)) \cdot \nabla_v f(t),$$

$$W_\psi(x,p) := \frac{1}{(2\pi)^3}\int e^{-ip\cdot y/\hbar}\gamma_\psi^{(1)}\left(x + \frac{y}{2}; x - \frac{y}{2}\right)\mathrm{d}y.$$

$$\gamma_\psi^{(1)}(x;y) = N\int W_\psi\left(\frac{x+y}{2}, p\right)e^{ip\cdot(x-y)/\hbar}\mathrm{d}p$$

$$\|[x_i, \omega_N]\|_{\mathrm{tr}} \le CN\hbar, \|[p_i, \omega_N]\|_{\mathrm{tr}} \le CN\hbar$$

$$\|W_{\psi_0}\|_{W^{1,1}} := \sum_{|\beta|\le 1}\int |\nabla^\beta W_{\psi_0}(x,p)|\mathrm{d}x\,\mathrm{d}p \le C$$

$$\left|\mathrm{tr}e^{i(\alpha\cdot x+\beta\cdot p)}\left(\gamma^{(1)}(t) - \omega^{\mathrm{Vlasov}}(t)\right)\right| \le CN\hbar(1 + |\alpha| + |\beta|)\exp\left(c_2\exp\left(c_1|t|\right)\right)$$

$$f_{r,p}(x) := \hbar^{-3/2}e^{-ip\cdot x/\hbar}\frac{e^{-(x-r)^2/2\delta^2}}{(2\pi\delta^2)^{3/4}}, x \in \mathbb{R}^3, \delta > 0$$

$$\omega_N(x;y) = \int M(r,p)f_{r,p}(x)\overline{f_{r,p}(y)}$$

$$\psi(x_1, x_2, \dots x_N) = (N!)^{-1/2}\det\left(\varphi_j(x_i)\right), \text{ with } \varphi_j \in L^2(\mathbb{R}^3)$$

$$i\hbar\frac{\mathrm{d}\varphi_j(t)}{\mathrm{d}t} = -\hbar^2\Delta\varphi_j(t) + \frac{1}{N}\sum_{i=1}^{N}(V * |\varphi_i(t)|^2)\varphi_j(t) - \frac{1}{N}\sum_{i=1}^{N}\left(V * \left(\varphi_j(t)\overline{\varphi_i(t)}\right)\varphi_i(t)\right)$$

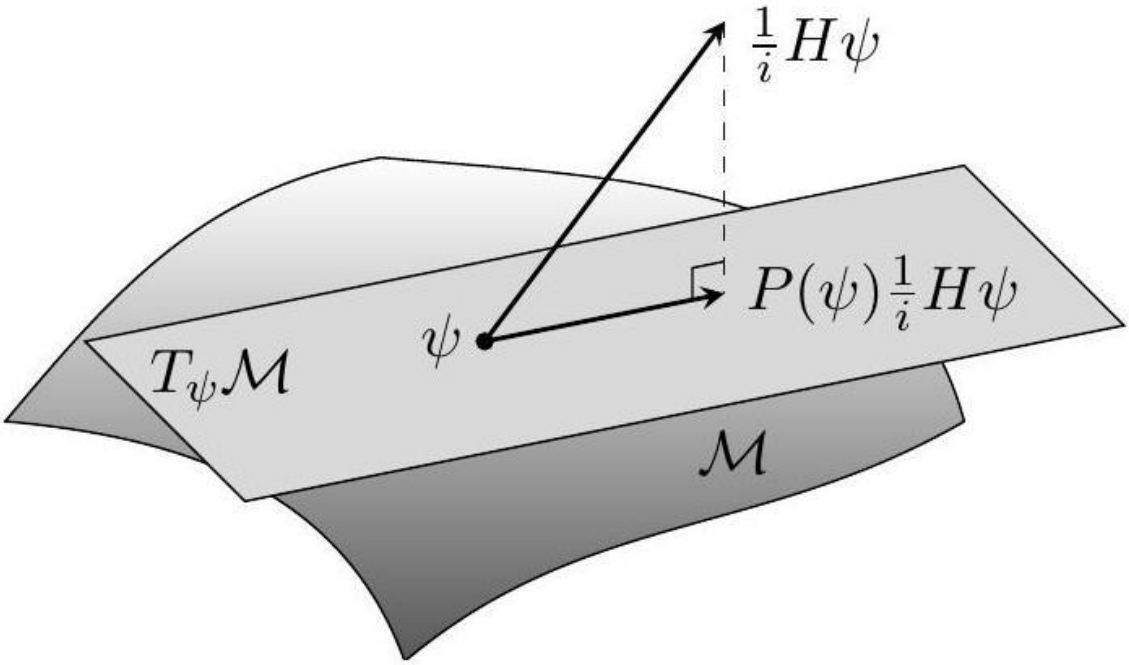

$$\omega_N(t) := \sum_{j=1}^{N} |\varphi_j(t)\rangle\langle\varphi_j(t)|$$

$$i\hbar \frac{\mathrm{d}\omega_N(t)}{\mathrm{d}t} = [-\hbar^2\Delta + (V * \rho(t)) - X(t), \omega_N(t)]$$

where $\rho(t)(x) := \omega_N(t)(x;x), X(t)(x;x') := V(x-x')\omega_N(t)(x;x')$

$$\|[x_i, \omega_N]\|_{\mathrm{tr}} \leq CN\hbar, \|[p_i, \omega_N]\|_{\mathrm{tr}} \leq CN\hbar.$$

$$\left\|\gamma^{(1)}(t) - \omega(t)\right\|_{\mathrm{tr}} \leq CN^{1/6}\exp\left(c_2\exp\left(c_1|t|\right)\right) \text{ for all } t \in \mathbb{R}.$$

$$B_{\mathrm{F}} = \{k \in \mathbb{Z}^3 : |k| \leq k_{\mathrm{F}}\} \text{ for some } k_{\mathrm{F}} > 0$$

$$h = \sum_{i=1}^{3} \left(p_i^2 + w_i^2 x_i^2\right), \text{ with } w_i > 0 \text{ for } i \in \{1,2,3\}$$

$$a_i := \sqrt{\frac{w_i}{2\hbar}}\left(x_i + \frac{i}{w_i}p_i\right), a_i^* := \sqrt{\frac{w_i}{2\hbar}}\left(x_i - \frac{i}{w_i}p_i\right).$$

$$h = \hbar\sum_{i=1}^{3} 2w_i\left(a_i^* a_i + \frac{1}{2}\right), \sigma(h) = \left\{\hbar\sum_{i=1}^{3} 2w_i\left(n_i + \frac{1}{2}\right) : n_i \in \mathbb{N}\right\}$$

$$H = \sum_{j=1}^{N} h_j.$$

$$n_1^{\max} := N^{1/3}E, n_2^{\max} := N^{1/3}E\frac{w_1}{w_2}, n_3^{\max} := N^{1/3}E\frac{w_1}{w_3}.$$

$$\omega_N = \sum_{n_1,n_2,n_3=0}^{n_1^{\max},n_2^{\max},n_3^{\max}} |n_1,n_2,n_3\rangle\langle n_1,n_2,n_3|.$$

$$\|[x_i,\omega_N]\|_{\mathrm{tr}} \le CN\hbar \text{ and } \|[p_i,\omega_N]\|_{\mathrm{tr}} \le CN\hbar.$$

$$[x_1,\omega_N] = \sqrt{\frac{\hbar}{2w_1}} \sum_{n_1=0}^{n_1^{\max}} [a_1^* + a_1, |n_1\rangle\langle n_1|] \otimes \sum_{n_2=0}^{n_2^{\max}} |n_2\rangle\langle n_2| \otimes \sum_{n_3=0}^{n_3^{\max}} |n_3\rangle\langle n_3|.$$

$$\begin{aligned} &a_1^*|n_1\rangle\langle n_1| - |n_1\rangle\langle n_1|a_1^* + a_1|n_1\rangle\langle n_1| - |n_1\rangle\langle n_1|a_1 \\ &= \sqrt{n+1}|n_1+1\rangle\langle n_1| - |n_1\rangle\langle n_1-1|\sqrt{n_1} + |n_1-1\rangle\langle n_1|\sqrt{n_1} - |n_1\rangle\langle n_1+1|\sqrt{n_1+1} \end{aligned}$$

$$\begin{aligned} &\sum_{n_1=0}^{n_1^{\max}} \sqrt{n_1+1}|n_1+1\rangle\langle n_1| - |n_1\rangle\langle n_1+1|\sqrt{n_1+1} \\ &+ \sum_{n_1=1}^{n_1^{\max}} |n_1-1\rangle\langle n_1|\sqrt{n_1} - |n_1\rangle\langle n_1-1|\sqrt{n_1} \\ &= \sqrt{n_1^{\max}+1}(|n_1^{\max}+1\rangle\langle n_1^{\max}| - |n_1^{\max}\rangle\langle n_1^{\max}+1|). \end{aligned}$$

$$\begin{aligned} &|[x_1,\omega_N]|^2 \\ &= (n_1^{\max}+1)(|n_1^{\max}\rangle\langle n_1^{\max}+1| - |n_1^{\max}+1\rangle\langle n_1^{\max}|)(|n_1^{\max}+1\rangle\langle n_1^{\max}| - |n_1^{\max}\rangle\langle n_1^{\max}+1|) \\ &\otimes \frac{\hbar}{2w_1} \sum_{n_2=0}^{n_2^{\max}} \sum_{\tilde{n}_2=0}^{n_2^{\max}} |n_2\rangle \underbrace{\langle n_2 \mid \tilde{n}_2\rangle}_{\delta_{n_2,\tilde{n}_2}} \langle \tilde{n}_2| \otimes \sum_{n_3=0}^{n_3^{\max}} \sum_{\tilde{n}_3=0}^{n_3^{\max}} |n_3\rangle \underbrace{\langle n_3 \mid \tilde{n}_3\rangle}_{\delta_{n_3,\tilde{n}_3}} \langle \tilde{n}_3| \end{aligned}$$

$$\begin{aligned} \sqrt{|[x_1,\omega_N]|^2} = &\sqrt{\frac{\hbar}{2w_1}} \sqrt{n_1^{\max}+1}(|n_1^{\max}\rangle\langle n_1^{\max}| + |n_1^{\max}+1\rangle\langle n_1^{\max}+1|) \\ &\otimes \sum_{n_2=0}^{n_2^{\max}} |n_2\rangle\langle n_2| \otimes \sum_{n_3=0}^{n_3^{\max}} |n_3\rangle\langle n_3| \end{aligned}$$

$$\|[x_1,\omega_N]\|_{\mathrm{tr}} = \sqrt{\frac{\hbar}{2w_1}} \sqrt{n_1^{\max}+1}\, 2n_2^{\max} n_3^{\max} = \mathrm{const} \times N^{2/3}\sqrt{N^{1/3}E+1}\sqrt{\hbar} \le CN\hbar$$

$$\begin{aligned} \mathrm{tr} x_1^2 \omega_N &= \frac{\hbar}{2w_1} \sum_{n_1=0}^{n_1^{\max}} \sum_{n_2=0}^{n_2^{\max}} \sum_{n_3=0}^{n_3^{\max}} \langle n_1,n_2,n_3|(a_1+a_1^*)^2|n_1,n_2,n_3\rangle \\ &= \frac{\hbar}{2w_1} \sum_{n_1=0}^{n_1^{\max}} \sum_{n_2=0}^{n_2^{\max}} \sum_{n_3=0}^{n_3^{\max}} \langle n_1,n_2,n_3|2a_1^*a_1+1|n_1,n_2,n_3\rangle \\ &= \frac{\hbar}{2w_1} \sum_{n_1=0}^{n_i^{\max}} (2n_1+1)(n_2^{\max}+1)(n_3^{\max}+1) = \frac{\hbar}{2w_1}(n_1^{\max}+1)^2(n_2^{\max}+1)(n_3^{\max}+1) \end{aligned}$$

$$N = \mathrm{tr}\omega_N = (n_1^{\max}+1)(n_2^{\max}+1)(n_3^{\max}+1)$$

$$\sqrt{\langle x_1^2\rangle} = \sqrt{\frac{\mathrm{tr} x_1^2 \omega_N}{\mathrm{tr}\omega_N}} = \sqrt{\frac{\hbar}{2w_1}(n_1^{\max}+1)} = \sqrt{\frac{E}{2w_1} + \mathcal{O}(N^{-1/3})} = \mathcal{O}(1) \text{ as } N \to \infty$$

$$\mathcal{F} := \mathbb{C} \oplus \bigoplus_{n=1}^{\infty} L_{\mathrm{a}}^2(\mathbb{T}^{3n})$$

$$\{a_p, a_q^*\} := a_p a_q^* + a_q^* a_p = \delta_{p,q}, \{a_p, a_q\} = 0 = \{a_q^*, a_p^*\}$$

$$\mathcal{H} := \hbar^2 \sum_{k\in\mathbb{Z}^3} |p|^2 a_p^* a_p + \frac{1}{2N} \sum_{k,q,p\in\mathbb{Z}^3} \hat{V}(k) a_{p+k}^* a_{q-k}^* a_q a_p$$

$$R^* a_p^* R := \begin{cases} a_p & \text{for } p \in B_{\mathrm{F}} \\ a_p^* & \text{for } p \in B_{\mathrm{F}}^c := \mathbb{Z}^3 \setminus B_{\mathrm{F}} \end{cases}, R\Omega := \psi_{B_{\mathrm{F}}}$$

$$R^* \mathcal{H} R = E_{\mathrm{HF}} + \mathbb{H}_0 + Q_{\mathrm{B}} + \mathcal{E}.$$

$$\mathbb{H}_0 := \sum_{k\in\mathbb{Z}^3} e(k) a_k^* a_k, e(k) := \hbar^2 ||k|^2 - k_{\mathrm{F}}^2 |,$$

$$Q_{\mathrm{B}} := \frac{1}{N} \sum_{k\in\Gamma^{\mathrm{nor}}} \hat{V}(k)(b^*(k)b(k) + b^*(-k)b(-k) + b^*(k)b^*(-k) + b(-k)b(k))$$

$$b^*(k) := \sum_{p\in B_{\mathrm{F}}^c, h\in B_{\mathrm{F}}} \delta_{p-h,k} a_p^* a_h^*$$

$$\Gamma^{\mathrm{nor}} := \{k \in \mathbb{Z}^3 \cap \mathrm{supp}\hat{V} : k_3 > 0 \text{ or } (k_3 = 0 \text{ and } k_2 > 0) \text{ or } (k_2 = k_3 = 0 \text{ and } k_1 > 0)\},$$

$$[b^*(k), b^*(l)] := b^*(k)b^*(l) - b^*(l)b^*(k) = 0$$

$$[b_k^*, b_l^*] = 0 = [b_k, b_l], [b_k, b_l^*] = \delta_{k,l}$$

$$b_\alpha^*(k) := \frac{1}{n_\alpha(k)} \sum_{\substack{p\in B_{\mathrm{F}}^c \cap B_\alpha \\ h\in B_{\mathrm{F}}\cap B_\alpha}} \delta_{p-h,k} a_p^* a_h^*$$

$$k \cdot \frac{\omega_\alpha}{|\omega_\alpha|} \geq N^{-\delta}$$

$$n_\alpha(k) = \left[\sum_{\substack{p\in B_{\mathrm{F}}^c \cap B_\alpha \\ h\in B_{\mathrm{F}}\cap B_\alpha}} \delta_{p-h,k}\right]^{1/2} \approx \sqrt{\frac{4\pi k_{\mathrm{F}}^2}{M}\left|k \cdot \frac{\omega_\alpha}{|\omega_\alpha|}\right|}$$

$$\left[b_\alpha^*(k), b_\beta^*(l)\right] = \left[b_\alpha(k), b_\beta(l)\right] = 0, \left[b_\alpha(k), b_\beta^*(l)\right] = \delta_{\alpha,\beta}\left(\delta_{k,l} + \mathcal{E}_\alpha(k,l)\right)$$

$$\|\mathcal{E}_\alpha(k,l)\psi\| \leq 2 n_\alpha(k)^{-1} n_\alpha(l)^{-1} \|\mathcal{N}\psi\|$$

$$c_\alpha^*(k) := \begin{cases} b_\alpha^*(k) & \text{for } \alpha \text{ such that } k \cdot \omega_\alpha / |\omega_\alpha| \geq N^{-\delta} \\ b_\alpha^*(-k) & \text{for } \alpha \text{ such that } k \cdot \omega_\alpha / |\omega_\alpha| \leq -N^{-\delta} \end{cases}$$

$$\mathcal{I}_k^+ := \left\{\alpha : k \cdot \omega_\alpha / |\omega_\alpha| \geq N^{-\delta}\right\} \subset \{1,2,\dots,M\} \mathcal{I}_k := \mathcal{I}_k^+ \cup \mathcal{I}_{-k}^+$$

$$[\mathbb{H}_0, c_\alpha^*(k)] = \left[\sum_{i \in \mathbb{Z}^3} e(i) a_i^* a_i, \frac{1}{n_\alpha(k)} \sum_{\substack{p \in B_{\mathrm{F}}^c \cap B_\alpha \\ h \in B_{\mathrm{F}} \cap B_\alpha}} \delta_{p-h,k} a_p^* a_h^*\right]$$

$$= \frac{1}{n_\alpha(k)} \sum_{\substack{p \in B_{\mathrm{F}}^c \cap B_\alpha \\ h \in B_{\mathrm{F}} \cap B_\alpha}} \delta_{p-h,k} (e(p) - e(h)) a_p^* a_h^* \approx 2\hbar^2 k_{\mathrm{F}} k \cdot \frac{\omega_\alpha}{|\omega_\alpha|} c_\alpha^*(k).$$

$$\mathbb{D}_{\mathrm{B}} := 2\hbar^2 k_{\mathrm{F}} \sum_{k \in \Gamma^{\mathrm{nor}}} \sum_{\alpha \in \mathcal{I}_k} \left| k \cdot \frac{\omega_\alpha}{|\omega_\alpha|} \right| c_\alpha^*(k) c_\alpha(k).$$

$$b^*(k) \approx \sum_{\alpha \in \mathcal{I}_k^+} n_\alpha(k) c_\alpha^*(k)$$

$$\mathcal{H}_{\mathrm{corr}} = R^* \mathcal{H}_N R - E_N^{\mathrm{pw}} \approx \sum_{k \in \Gamma^{\mathrm{nor}}} 2\hbar\kappa |k| h_{\mathrm{eff}}(k)$$

$$h_{\mathrm{eff}}(k) := \sum_{\alpha, \beta \in \mathcal{I}_k} \left[(D(k) + W(k))_{\alpha,\beta} c_\alpha^*(k) c_\beta(k) + \frac{1}{2} \widetilde{W}(k)_{\alpha,\beta} \left(c_\alpha^*(k) c_\beta^*(k) + \text{ h.c. } \right) \right]$$

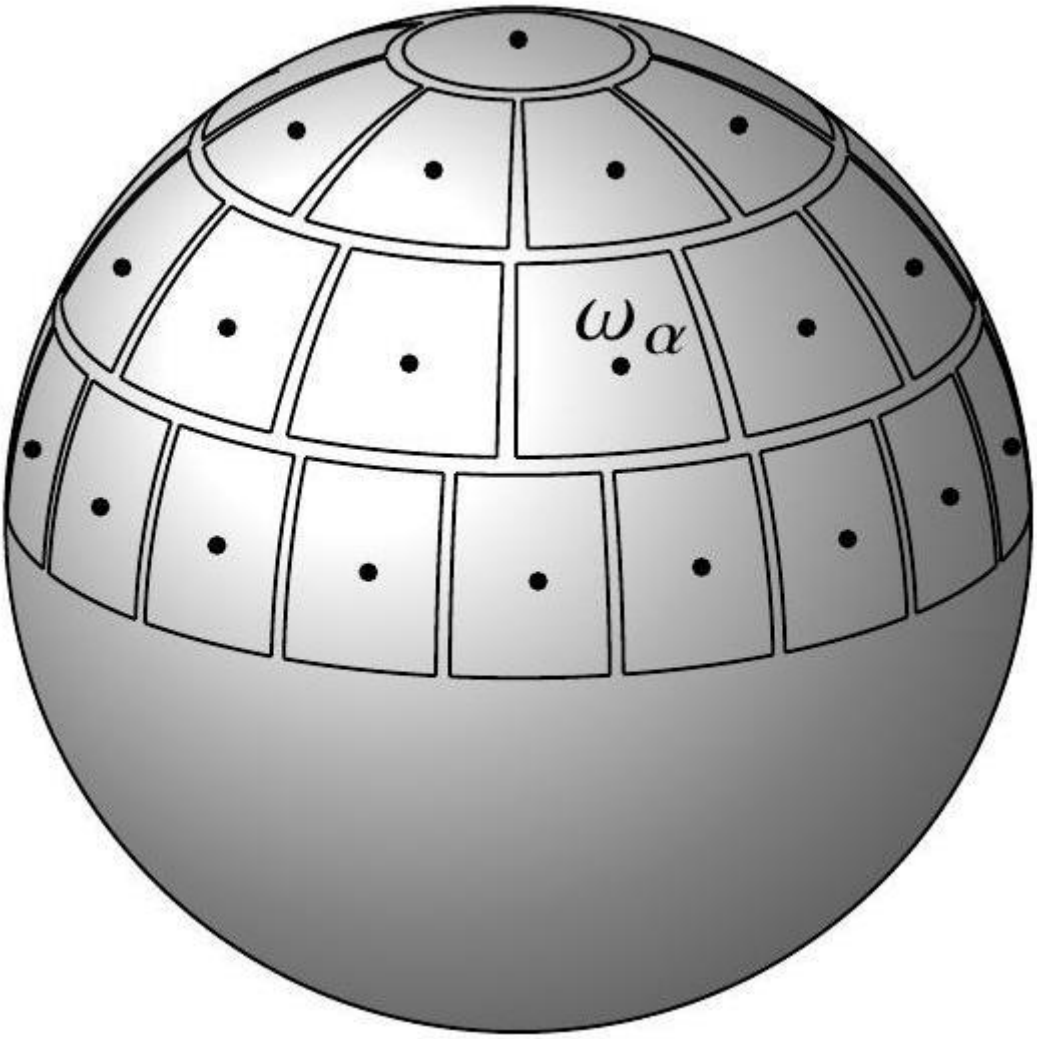

$$D(k)_{\alpha,\beta} := \delta_{\alpha,\beta}|k\cdot\omega_\alpha|/(|k||\omega_\alpha|), \forall \alpha,\beta \in \mathcal{I}_k$$

$$W(k)_{\alpha,\beta} := \frac{\hat{V}(k)}{2\hbar\kappa N|k|} \times \begin{cases} n_\alpha(k)n_\beta(k) & \text{if } \alpha,\beta \in \mathcal{I}_k^+ \text{ or } \alpha,\beta \in \mathcal{I}_{-k}^+ \\ 0 & \text{otherwise} \end{cases}$$

$$\widetilde{W}(k)_{\alpha,\beta} := \frac{\hat{V}(k)}{2\hbar\kappa N|k|} \times \begin{cases} 0 & \text{if } \alpha,\beta \in \mathcal{I}_k^+ \\ n_\alpha(k)n_\beta(k) & \text{or } \alpha,\beta \in \mathcal{I}_{-k}^+ \end{cases}$$

$$T := e^B, B := \sum_{k\in\Gamma^{\text{nor}}} \frac{1}{2} \sum_{\alpha,\beta\in\mathcal{I}_k} K(k)_{\alpha,\beta} c_\alpha^*(k) c_\beta^*(k) - \text{ h.c.}$$

$$K(k) := \log|S(k)^\top| = \frac{1}{2}\log\left(S(k)S(k)^\top\right)$$

$$S(k) := (D(k) + W(k) - \widetilde{W}(k))^{1/2} E(k)^{-1/2}$$

$$E(k) := \left[(D(k) + W(k) - \widetilde{W}(k))^{1/2}(D(k) + W(k) + \widetilde{W}(k))(D(k) + W(k) - \widetilde{W}(k))^{1/2}\right]^{1/2}$$

$$T^* c_\gamma(k) T \approx \sum_{\alpha\in\mathcal{I}_k} \cosh\left(K(k)\right)_{\alpha,\gamma} c_\alpha(k) + \sum_{\alpha\in\mathcal{I}_k} \sinh\left(K(k)\right)_{\alpha,\gamma} c_\alpha^*(k).$$

$$T^* \mathcal{H}_{\text{corr}} T \approx \tilde{E}_N^{\text{RPA}} + \sum_{k\in\Gamma^{\text{nor}}} 2\hbar\kappa|k| \sum_{\alpha,\beta\in\mathcal{I}_k} \mathfrak{K}(k)_{\alpha,\beta} c_\alpha^*(k) c_\beta(k)$$

$$\mathfrak{K}(k) = \cosh(K(k))(D(k)+W(k))\cosh(K(k)) + \sinh(K(k))(D(k)+W(k))\sinh(K(k)) + \cosh(K(k))\widetilde{W}(k)\sinh(K(k)) + \sinh(K(k))\widetilde{W}(k)\cosh(K(k))$$

$$\tilde{E}_N^{\mathrm{RPA}} = \sum_{k\in\Gamma^{\mathrm{nor}}} \hbar\kappa|k|\mathrm{tr}(E(k)-D(k)-W(k)) \in \mathbb{R}$$

$$\psi := RT\xi \in L_a^2(\mathbb{R}^{3N}), \xi := \frac{1}{Z_m} c^*(\varphi_1)\cdots c^*(\varphi_m)\Omega$$

$$c^*(\varphi_i) = \sum_{k\in\Gamma^{\mathrm{nor}}} \sum_{\alpha\in\mathcal{J}_k} c_\alpha^*(k)(\varphi_i(k))_\alpha$$

$$\varphi_1,\dots,\varphi_m \in \bigoplus_{k\in\Gamma^{\mathrm{nor}}} \ell^2(\mathcal{J}_k), \|\varphi_i\|^2 := \sum_{k\in\Gamma^{\mathrm{nor}}} \sum_{\alpha\in\mathcal{J}_k} |(\varphi_i(k))_\alpha|^2 = 1$$

$$\xi(t) := \frac{1}{Z_m} c^*(\varphi_1(t))\cdots c^*(\varphi_m(t))\Omega, t\in\mathbb{R}$$

$$\varphi_m(t) := e^{-iH_{\mathrm{B}}t/\hbar}\varphi_m, H_{\mathrm{B}} := \bigoplus_{k\in\Gamma^{\mathrm{nor}}} 2\hbar\kappa|k|\mathfrak{K}(k)$$

$$\left\| e^{-i\mathcal{H}t/\hbar}RT\xi - e^{-i(E_N^{\mathrm{pw}}+\tilde{E}_N^{\mathrm{RPA}})t/\hbar}RT\xi(t)\right\| \le C_V(m+1)^2\sqrt{(2m-1)!!}\left(N^{-\frac{\delta}{2}} + M^{-\frac{1}{2}} + M^{\frac{3}{2}}N^{-\frac{1}{3}+\delta} + M^{\frac{1}{4}}N^{-\frac{1}{6}}\right)|t|$$

$$\mathcal{N}RT\xi = R(R^*\mathcal{N}R)T\xi = R\left(\mathcal{N}^{\mathrm{p}} - \mathcal{N}^{\mathrm{h}} + N\right)T\xi = RNT\xi = NRT\xi$$

$$\left(-\Delta - \frac{2Z}{|x|}\right)\varphi_i(x) + 2\sum_{k=1}^{N}\int \frac{|\varphi_k(y)|^2\varphi_i(x) - \varphi_k(x)\overline{\varphi_k(y)}\varphi_i(y)}{|x-y|}dy = \varepsilon_i\varphi_i(x)$$

$$\int \overline{\varphi_i(x)}\varphi_j(x)dx = \delta_{ij}$$

$$Z > \frac{1}{\Delta_s}(20N + 8\sqrt{2N}), \Delta_s = n_s^{-2} - (n_s+1)^{-2}$$

$$\varepsilon_1,\dots,\varepsilon_N \in \cup_{k=1}^{s}\left[-Z^2/n_k^2, -Z^2/(n_k+1)^2\right)$$

$$\varphi_{nlm\sigma}(\mathbf{x},\mu) = \frac{f_{nl}(|\mathbf{x}|)}{|\mathbf{x}|}Y_{lm}(\mathbf{x})\delta_{\sigma,\mu}$$

$$\mathcal{E}^{HF}(\varphi_1,\dots,\varphi_N) = \sum_{k=1}^{N}\int |\nabla\varphi_k(x)|^2 - \frac{2Z}{|x|}|\varphi_k(x)|^2 dx + 2\sum_{i<k}\int \frac{|\varphi_i(x)|^2|\varphi_k(y)|^2 - \overline{\varphi_i(x)}\varphi_i(y)\varphi_k(x)\overline{\varphi_k(y)}}{|x-y|}dxdy$$

$$P = \sum_{k=1}^{N} |\varphi_k\rangle\langle\varphi_k|$$

$$\mathcal{E}^H(\varphi_1, \dots, \varphi_N) = \sum_{k=1}^{N} \int |\varphi_k(x)|^2 - \frac{2Z}{|x|}|\varphi_k(x)|^2 dx + 2\sum_{i<k} \int \frac{|\varphi_i(x)|^2|\varphi_k(y)|^2}{|x-y|} dxdy$$

$$\left(-\Delta - \frac{2}{|x|}\right)\varphi_i(x) + \frac{2}{Z}\sum_{k=1}^{N} \int \frac{|\varphi_k(y)|^2\varphi_i(x) - \varphi_k(x)\overline{\varphi_k(y)}\varphi_i(y)}{|x-y|} dy = Z^{-2}\varepsilon_i\varphi_i(x)$$

$$S_{N,q} := \left\{P \in \mathcal{T}_1\left(L^2(\mathbb{R}^3 \times \{1, \dots, q\})\right) \mid 0 \le P \le 1, \mathrm{tr}P = N\right\}$$

$$\tau(x,y) = \sum_{n\ge 0} \lambda_n \varphi_n(x)\overline{\varphi_n(y)}$$

$$\rho(x) = \sum_{n\ge 0} \lambda_n |\varphi_n(x)|^2$$

$$H_P = -\Delta - V + \frac{1}{Z}(U_P - K_P)$$

$$(K_P\psi)(x) := \int V(x-y)\tau(x,y)\psi(y)dy$$

$$\mathcal{E}^{HF}(P) = \mathrm{tr}[(-\Delta - V)P] + \frac{1}{2Z}\int (\rho(x)\rho(y) - |P(x,y)|^2)V(x-y)dxdy$$

(i) $V \le -\varepsilon\Delta + \varepsilon^{-1}$,

(ii) $U_P \le N(-\varepsilon\Delta + \varepsilon^{-1})$,

(iii) $\frac{1}{Z}U_P \le \varepsilon(-\Delta - V) + \frac{1}{\varepsilon}\left(\varepsilon + \frac{N}{Z}\right)^2$,

(iv) $-\Delta \le \frac{1}{1-\varepsilon}H_P + \frac{1}{\varepsilon(1-\varepsilon)}$ if $\varepsilon \in (0,1)$.

$$\varepsilon V + \frac{1}{Z}U_P \le \left(\varepsilon + \frac{N}{Z}\right)(-\delta\Delta + \delta^{-1})$$

$$E_n^Z \le E_n^\infty + 2\frac{N}{Z} + 2\frac{N}{Z}\sqrt{E_n^\infty + 1}.$$

$$E_N^Z \le E_N^\infty + 2\frac{N-1}{Z} + 2\frac{N-1}{Z}\sqrt{E_N^\infty + 1}.$$

$$-\Delta - V \le H_P \le -\Delta - V + \frac{1}{Z}U_P \le (1+\varepsilon)(-\Delta - V) + \frac{1}{\varepsilon}\left(\varepsilon + \frac{N}{Z}\right)^2$$

$$E_n^\infty \le E_n^Z \le (1+\varepsilon)E_n^\infty + \frac{1}{\varepsilon}\left(\varepsilon + \frac{N}{Z}\right)^2.$$

$$\begin{aligned}\mathcal{E}^{HF}(\varphi_1,\dots,\varphi_N) &= \mathcal{E}_{N-1}^{HF}(\varphi_1,\dots,\varphi_{N-1}) + \langle \varphi_N, H_{P,N-1}\varphi_N\rangle \\ &= \mathcal{E}_{N-1}^{HF}(\varphi_1,\dots,\varphi_{N-1}) + E_N^Z\end{aligned}$$

$$\tau_{N-1}(x,y) = \sum_{k=1}^{N-1} \varphi_k(x)\overline{\varphi_k(y)}$$

$$E_N^Z = \inf_{\substack{\psi\in D(H_{P,N-1});\\ \psi\in \mathrm{span}\{\varphi_1,\dots,\varphi_{N-1}\}^\perp}} \langle \psi, H_{P,N-1}\psi\rangle.$$

$$\begin{aligned}&\mathrm{dist}(\sigma(A)\cap\Omega, \sigma(B)\setminus\Omega) \ge \delta,\\ &\mathrm{dist}(\sigma(B)\cap\Omega, \sigma(A)\setminus\Omega) \ge \delta,\end{aligned}$$

$$\|\chi_\Omega(A) - \chi_\Omega(B)\|_2 \le \delta^{-1}(\|(A-B)\chi_\Omega(A)\|_2^2 + \|(A-B)\chi_\Omega(B)\|_2^2)^{1/2}.$$

$$\begin{aligned}\|\chi(A)-\chi(B)\|_2^2 =& \mathrm{tr}(\chi(A)(1-\chi(B))\chi(A))\\ &+\mathrm{tr}(\chi(B)(1-\chi(A))\chi(B))\end{aligned}$$

$$A\varphi_k = \varepsilon_k\varphi_k, \varepsilon_k \in \sigma(A)\cap\Omega, k = 1,\dots,n.$$

$$\frac{1}{\delta}|B-\varepsilon_k| \ge 1-\chi_\Omega(B), k = 1,\dots,n.$$

$$\begin{aligned}\mathrm{tr}(\chi(A)(1-\chi(B))\chi(A)) &= \sum_{k=1}^n \langle \varphi_k, (1-\chi(B))\varphi_k\rangle\\ &\le \delta^{-2}\sum_{k=1}^n \langle \varphi_k, (B-\varepsilon_k)^2\varphi_k\rangle\\ &= \delta^{-2}\sum_{k=1}^n \langle \varphi_k, (B-A)^2\varphi_k\rangle\\ &= \delta^{-2}\|(A-B)\chi(A)\|_2^2\end{aligned}$$

$$\text{(i) } \left\|\left(U_P - U_Q\right)\varphi\right\| \le 4\|P-Q\|_1\|\nabla\varphi\|$$

$$\text{(ii) } \left\|\left(K_P - K_Q\right)\varphi\right\| \le 4\|P-Q\|_2\|\nabla\varphi\|.$$

$$\begin{aligned}\left|\langle\psi, \left(U_P - U_Q\right)\varphi\rangle\right| &\le 2\int dy\left|\rho_P(y)-\rho_Q(y)\right|\int |\psi(x)|\frac{|\varphi(x)|}{|x-y|}dx\\ &\le 4\int dy\left|\rho_P(y)-\rho_Q(y)\right|\|\psi\|\|\nabla\varphi\|\\ &\le 4\|P-Q\|_1\|\psi\|\|\nabla\varphi\|\end{aligned}$$

$$\begin{aligned}&\left\|\chi_\Omega(H_P) - \chi_\Omega\left(H_Q\right)\right\|_2\\ &\le \frac{4}{\delta Z}(1+\sqrt{2N})\left(\left\|\sqrt{-\Delta}\chi_\Omega(H_P)\right\|_2^2 + \left\|\sqrt{-\Delta}\chi_\Omega\left(H_Q\right)\right\|_2^2\right)^{1/2}\|P-Q\|_2\\ &\le \frac{8}{\delta Z}(1+\sqrt{2N})\sqrt{2N}\|P-Q\|_2\end{aligned}$$

$$H_P - H_Q = Z^{-1}(U_P - U_Q) - Z^{-1}(K_P - K_Q)$$

$$\left\|(U_P - U_Q)\chi_\Omega(H_P)\right\|_2 \leq 4\|P - Q\|_1 \left\|\sqrt{-\Delta}\chi_\Omega(H_P)\right\|_2$$
$$\left\|(K_P - K_Q)\chi_\Omega(H_P)\right\|_2 \leq 4\|P - Q\|_2 \left\|\sqrt{-\Delta}\chi_\Omega(H_P)\right\|_2.$$

$$\begin{aligned}\left\|\sqrt{-\Delta}\chi_\Omega(H_P)\right\|_2^2 &= \mathrm{tr}\big(\chi_\Omega(H_P)(-\Delta)\chi_\Omega(H_P)\big)\\ &\leq 4\mathrm{tr}\chi_\Omega(H_P) = 4N\end{aligned}$$

$$\left\|\sqrt{-\Delta}\chi_\Omega(H_P)\right\|_2^2 = |\mathcal{E}^{HF}(P)| \leq N$$

$$[U(R)\psi](x) := \psi(R^{-1}x).$$

$$\Omega := \bigcup_{k=1}^{s} \left[-n_k^{-2}, -n_k^{-2} + \frac{4N}{Z}\right]$$

$$\mathrm{dist}(\Omega, \sigma(H_P) \setminus \Omega) \geq n_s^{-2} - (n_s + 1)^{-2} - \frac{4N}{Z} =: \delta$$

$$\frac{8}{Z}(1 + \sqrt{2N})\sqrt{2N} < \delta$$

$$P' = \chi_\Omega\left(H_{P'}^{(q)}\right)$$

$$H_{P'}^{(q)} := -\Delta - V + \frac{q}{Z}U_{P'} - \frac{1}{Z}K_{P'}$$

$$P'(R) = U(R)\chi_\Omega\left(H_{P'}^{(q)}\right)U(R)^* = \chi_\Omega\left(U(R)H_{P'}^{(q)}U(R)^*\right) = \chi_\Omega\left(H_{P'(R)}^{(q)}\right)$$

$$|\mathbf{x}|^{-1}f(|\mathbf{x}|)Y_{lm}(\mathbf{x}), f \in L^2(\mathbb{R}_+),$$

$$\Phi_k(\mathbf{x}, s) := \varphi_k(\mathbf{x})\delta_{ks}, k = 1, \dots, N$$

$$\mathcal{E}^{HF}(\Phi_1, \dots, \Phi_N) = \mathcal{E}^H(\varphi_1, \dots, \varphi_N)$$

$$\delta := \frac{3}{4} - 2\frac{N-1}{Z} > 0$$

$$\frac{4}{Z}(1 + \sqrt{2N})\sqrt{2N} < \delta$$

$$Z > \frac{40}{3}N + \frac{16}{3}\sqrt{2N} - \frac{8}{3}$$

$$\lim_{Z\to\infty} P_Z = \sum_{k=1}^{s} \chi_{\{-n_k^{-2}\}}(-\Delta - V)$$

$$\|P_Z - P_\infty\|_2 \leq \frac{4}{\delta Z}(1 + \sqrt{2N})\sqrt{2N}\|P_Z\|_2 = \frac{4\sqrt{2}}{\delta}\frac{N}{Z}(1 + \sqrt{2N}) \to 0 \ (Z \to \infty)$$

$$\varphi_{jm}(x) := \frac{1}{|x|} f_j(|x|) Y_{\ell_j m}(x), j = 1, \dots, s, m = -\ell_j \dots \ell_j,$$

$$-\frac{1}{n_j^2} \leq \varepsilon_j \leq -\frac{1}{n_j^2} + \frac{4N}{Z}$$

$$P = F(P) := \sum_{j=1}^{s} \chi_{\Omega_j}(H_P) \pi_{\ell_j}$$

$$\Omega_j := \left[-\frac{1}{n_j^2}, -\frac{1}{n_j^2} + \frac{4N}{Z}\right]$$

$$S_N^{sym} := \left\{P \in S_{N,1} \mid U(R) P U(R)^* = P, \text{ for all } R \in SO(3)\right\}$$

$$\|F(P) - F(Q)\|_1 \leq 32 \frac{N}{\delta Z} \|P - Q\|_1$$

$$\|F(P) - F(Q)\|_2 \leq \frac{8}{\delta Z} \sqrt{2N}(1 + \sqrt{2N}) \|P - Q\|_2$$

$$F_j(P) := \chi_{\Omega_j}(H_P) \pi_{\ell_j} = \pi_{\ell_j} \chi_{\Omega_j}(H_P)$$

$$F_j(P) F_k(P) = \delta_{jk} F_j(P)$$

$$\mathrm{tr} F(P) = \sum_{j=1}^{s} \mathrm{tr} F_j(P) = \sum_{j=1}^{s} \left(2\ell_j + 1\right) = N$$

$$\|F(P) - F(Q)\|_2^2 = \mathrm{tr} F(P)(1 - F(Q)) F(P) + \mathrm{tr} F(Q)(1 - F(P)) F(Q)$$

$$\begin{aligned} \mathrm{tr} F(P)(1 - F(Q)) F(P) &= \sum_{j=1}^{s} \mathrm{tr} F_j(P)(1 - F(Q)) F_j(P) \\ &\leq \delta^{-2} \sum_{j=1}^{s} \left\|\left(H_P - H_Q\right) F_j(P)\right\|_2^2 \end{aligned}$$

$$\left\|\left(H_P - H_Q\right) F_j(P)\right\|_2 \leq \frac{16}{Z} \sqrt{2\ell_j + 1} \|P - Q\|_1$$

$$\|F(P) - F(Q)\|_1 \leq \sqrt{2N} \|F(P) - F(Q)\|_2$$

$$F(P_n) = \sum_{k=1}^{N} \left|\varphi_k^{(n)}\right\rangle \left\langle\varphi_k^{(n)}\right|, H_{P_n} \varphi_k^{(n)} = \varepsilon_k^{(n)} \varphi_k^{(n)}$$

$$2\chi_R \left(H_{P_n} - \varepsilon_k^{(n)}\right) \chi_R = \chi_R^2 \left(H_{P_n} - \varepsilon_k^{(n)}\right) + \left(H_{P_n} - \varepsilon_k^{(n)}\right) \chi_R^2 - \left[\left[H_{P_n}, \chi_R\right], \chi_R\right]$$

$$\left[\left[H_{P_n}, \chi_R\right], \chi_R\right] = 2|\nabla \chi_R|^2 - Z^{-1} \left[\left[K_{P_n}, \chi_R\right], \chi_R\right]$$

$$\chi_R\left(H_{P_n}-\varepsilon_k^{(n)}\right)\chi_R \geq \left(-2R^{-1}-\varepsilon_k^{(n)}\right)\chi_R^2 \geq c\chi_R^2$$

$$c\left\|\chi_R\varphi_k^{(n)}\right\|^2 \leq \frac{1}{2Z}\left|\left\langle\varphi_k^{(n)},\left[\chi_R,\left[\chi_R,K_{P_n}\right]\right]\varphi_k^{(n)}\right\rangle\right| + O(R^{-2})$$
$$= O(R^{-1}),(R\to\infty)$$

$$\left|\tau^{(n)}(x,y)\right| \leq \rho^{(n)}(x)^{1/2}\rho^{(n)}(y)^{1/2}$$

$$\rho:\mathcal{T}_1\left(L^2(\mathbb{R}^n)\right)\to L^1(\mathbb{R}^n)$$
$$K\mapsto\rho_K$$

$$|\psi\rangle\langle\varphi| \mapsto \psi(x)\overline{\varphi(x)}$$

$$\text{(i)}\int \rho_K(x)dx = \mathrm{tr}(K)$$

$$\text{(ii)}\int |\rho_K(x)|dx \leq \mathrm{tr}|K|$$

$$\left\langle J_{\varepsilon,x},\varphi\right\rangle = \int J_\varepsilon(x-y)\varphi(y)dy = (J_\varepsilon*\varphi)(x)$$

$$\rho_K := L^1-\lim_{\varepsilon\to 0}\rho_{K,\varepsilon}$$
$$\rho_{K,\varepsilon}(x) := \left\langle J_{\varepsilon,x},KJ_{\varepsilon,x}\right\rangle$$

$$\rho_K(x)=\sum_{n\geq 0}\lambda_n\varphi_n(x)\overline{\psi_n(x)}$$
$$\text{if } K=\sum_{n\geq 0}\lambda_n|\varphi_n\rangle\langle\psi_n|$$

$$\left\|\rho_{(K-K_N),\varepsilon}\right\|_1 \leq \mathrm{tr}|K-K_N| \to 0,(N\to\infty),$$

$$\left\|(J_\varepsilon*\varphi)\overline{(J_\varepsilon*\psi)}-\varphi\bar{\psi}\right\|_1$$
$$=\left\|(J_\varepsilon*\varphi-\varphi)\bar{\psi}+(J_\varepsilon*\varphi)\left(\overline{(J_\varepsilon*\psi)}-\bar{\psi}\right)\right\|_1$$
$$\leq \|J_\varepsilon*\varphi-\varphi\|\|\psi\|+\|J_\varepsilon*\varphi\|\|J_\varepsilon*\psi-\psi\|\to 0\ (\varepsilon\to 0)$$

$$\int \rho_K(x)dx = \sum_{n\geq 0}\lambda_n\int \varphi_n(x)\overline{\psi_n(x)}dx = \sum_{n\geq 0}\lambda_n\langle\psi_n,\varphi_n\rangle$$
$$\mathrm{tr}K = \sum_{n\geq 0}\langle\psi_n,K\psi_n\rangle = \sum_{n\geq 0}\lambda_n\langle\psi_n,\varphi_n\rangle$$

$$\mathcal{L}_E = \bar{q}\left(i\gamma_\mu D_\mu + im\right)q,$$

$$\mathcal{H} = \pi\dot{q}-\mathcal{L}_E,\pi = \frac{\partial\mathcal{L}_E}{\partial\dot{q}} = iq^+,$$

$$\mathcal{H}_0 = -\bar{q}(i\gamma\nabla+im)q.$$

$$\dot{\Psi} = -H\Psi,$$

$$q_{\alpha i}(\mathbf{x}) = \int \frac{d\mathbf{p}}{(2\pi)^3} \frac{1}{(2|p_4|)^{1/2}} \left[a(\mathbf{p},s,c)u_{\alpha i}(\mathbf{p},s,c)e^{i\mathbf{px}} + b^+(\mathbf{p},s,c)v_{\alpha i}(\mathbf{p},s,c)e^{-i\mathbf{px}}\right]$$

$$\mathcal{V}_S = \bar{q}(\mathbf{x})t^a\gamma_\mu A_\mu^a(t,\mathbf{x})q(\mathbf{x})$$

$$\dot{\Phi} = -V\Phi, V = e^{H_0 t}V_S e^{-H_0 t}$$

$$\Phi(t) = \Phi(0) - \int_0^t d\tau V(\tau)\Phi(\tau)$$

$$\Phi(t) = \Phi(0) - \int_0^t d\tau V(\tau)\Phi(0) + \int_0^t d\tau V(\tau)\int_0^\tau d\tau' V(\tau')\Phi(\tau')$$

$$\langle\Phi(t)\rangle \approx \Phi(0) + \int_0^t d\tau \int_0^\tau d\tau' \langle V(\tau)V(\tau')\rangle\langle\Phi(\tau')\rangle$$

$$\langle\dot{\Phi}(t)\rangle = +\int_0^t d\tau' \langle V(t)V(\tau')\rangle\langle\Phi(\tau')\rangle$$

$$\langle\dot{\Phi}\rangle = +\int_0^t d\tau \langle V(t)V(t-\tau)\rangle\langle\Phi(t-\tau)\rangle$$

$$\langle\dot{\Phi}(t)\rangle = +\int_0^\infty d\tau \langle V(t)V(t-\tau)\rangle\langle\Phi(t)\rangle$$

$$\langle V(t)V(t-\tau)\rangle = F(\tau)$$

$$\langle\dot{\Phi}(t)\rangle = \int d\mathbf{x}\bar{q}(\mathbf{x},t)t^a\gamma_\mu q(\mathbf{x},t)\int_0^\infty d\tau \int d\mathbf{y}\bar{q}(\mathbf{y},t-\tau)t^b\gamma_\nu q(\mathbf{y},t$$

$$-\tau)g^2\left\langle A_\mu^a(t,\mathbf{x})A_\nu^b(t-\tau,\mathbf{y})\right\rangle\langle\Phi(t)\rangle$$

$$\dot{\chi} = -H_{ind}\chi$$

$$\mathcal{H}_{ind} = -\bar{q}(i\gamma\nabla + im)q - \bar{q}t^a\gamma_\mu q\int d\mathbf{y}\bar{q}'t^b\gamma_\nu q'\int_0^\infty d\tau g^2\left\langle A_\mu^a A_\nu'^b\right\rangle$$

$$q = q(\mathbf{x}), \bar{q} = \bar{q}(\mathbf{x}), q' = q(\mathbf{y}), \bar{q}' = \bar{q}(\mathbf{y}), A_\mu^a = A_\mu^a(t,\mathbf{x}) \text{ and } A_\nu'^b = A_\nu^b(t-\tau,\mathbf{y})$$

$$A_\mu^a(x) = \sum_{i=1}^N A_\mu^a(x;\gamma_i)$$

$$A_\mu^a(x) = \frac{2}{g}4\pi^2 i\rho^2\omega^{ab}\bar{\eta}_{\mu b\nu}\int \frac{dq}{(2\pi)^4}q_\nu\phi(q)e^{iq(x-z)}$$

$$\phi(q) = \frac{1}{q^2}\left(K_2(q\rho) - \frac{2}{q^2\rho^2}\right)$$

$$\int_0^\infty dx_4 \langle A_\mu^a(x) A_\nu^b(y)\rangle = \frac{1}{2}\int_{-\infty}^\infty dx_4 \langle A_\mu^a(x) A_\nu^b(y)\rangle =$$
$$= \frac{4(4\pi^2)^2}{g^2}\frac{\delta_{ab} n\rho^4}{N_c^2-1}\left(\delta_{\mu\nu}\delta_{\alpha\beta} - \delta_{\mu\alpha}\delta_{\nu\beta}\right) \times$$
$$\times \int \frac{dp}{(2\pi)^4} p_\alpha p_\beta e^{ip(x-y)} \phi(-p)\phi(p)\frac{1}{2} 2\pi\delta(p_4)$$

$$\left\langle \widehat{A_\mu^a A_\nu^b}(\mathbf{p})\right\rangle = \frac{(4\pi^2)^2 n\rho^4}{g^2}\frac{2\delta_{ab}}{N_c^2-1}\left[I(p)\delta_{\mu\nu} - J_{\mu\nu}(p)\right]$$
$$I(p) = \mathbf{p}^2\phi(-p)\phi(p), J_{ij}(p) = p_i p_j \phi(-p)\phi(p),$$
$$J_{4i} = J_{i4} = J_{44} = 0.$$

$$|\sigma\rangle = T|0\rangle$$
$$T = \Pi_{p,s,c}\exp\{\varphi[a^+(\mathbf{p},s,c)b^+(-\mathbf{p},s,c) + a(\mathbf{p},s,c)b(-\mathbf{p},s,c)]\}$$

$$E = \langle\sigma|H|\sigma\rangle$$

$$A = TaT^{-1}, B^+ = Tb^+T^{-1},$$

$$q(\mathbf{x}) = \int \frac{d\mathbf{p}}{(2\pi)^3}\frac{1}{(2|p_4|)^{1/2}}\left[A(\mathbf{p},s,c)U(\mathbf{p},s,c)e^{i\mathbf{px}} + B^+(\mathbf{p},s,c)V(\mathbf{p},s,c)e^{-i\mathbf{px}}\right]$$
$$\bar{q}(\mathbf{x}) = \int \frac{d\mathbf{p}}{(2\pi)^3}\frac{1}{(2|p_4|)^{1/2}}\left[A^+(\mathbf{p},s,c)\bar{U}(\mathbf{p},s,c)e^{-i\mathbf{px}} + B(\mathbf{p},s,c)\bar{V}(\mathbf{p},s,c)e^{i\mathbf{px}}\right]$$

$$U(\mathbf{p},s,c) = \cos(\varphi)u(\mathbf{p},s,c) - \sin(\varphi)v(-\mathbf{p},s,c)$$
$$V(\mathbf{p},s,c) = \sin(\varphi)u(-\mathbf{p},s,c) + \cos(\varphi)v(\mathbf{p},s,c)$$

$$(\hat{p} - im)u(p,s) = 0, (\hat{p} + im)v(p,s) = 0,$$

$$i\gamma_5\hat{s}u(p,s) = u(p,s), i\gamma_5\hat{s}v(p,s) = v(p,s)$$

$$s_4 = \frac{(\mathbf{pn})}{im}, \mathbf{s} = \mathbf{n} + \frac{(\mathbf{pn})\mathbf{p}}{im(p_4 - im)},$$

$$\bar{u}u = 2im, \bar{v}v = -2im,$$

$$u(p,s)\bar{u}(p,s) = \frac{\hat{p} + im}{2}(1 + i\gamma_5\hat{s})$$
$$v(p,s)\bar{v}(p,s) = \frac{\hat{p} - im}{2}(1 + i\gamma_5\hat{s})$$

$$v(q,s) = \alpha\frac{\hat{q} - im}{-2im}\frac{1 + i\gamma_5\hat{s}}{2}u(p,s)$$

$$\overset{*}{\alpha}\alpha = -\frac{2m^2}{(pq) + m^2} = \frac{m^2}{\mathbf{p}^2}, |\alpha| = \frac{m}{|\mathbf{p}|}$$

$$\sum_s u(q,s)\bar{v}(p,s) = \alpha\frac{\hat{q}+im}{2im}(\hat{p}-im), \sum_s v(p,s)\bar{u}(q,s) = \overset{*}{\alpha}(\hat{p}-im)\frac{\hat{q}+im}{2im}$$

$$\sum_s u(p,s)\bar{v}(q,s) = \overset{*}{\alpha}(\hat{p}+im)\frac{\hat{q}-im}{2im}, \sum_s v(q,s)\bar{u}(p,s) = \alpha\frac{\hat{q}-im}{2im}(\hat{p}+im)$$

$$\left\langle \widetilde{A_\mu^a A_\nu^b}(0)\right\rangle \int \frac{d\mathbf{p}d\mathbf{p}'}{(2\pi)^6}\frac{1}{4|p_4||p_4'|}\bar{V}_{\alpha i}(\mathbf{p},s,c)t_{ij}^a\gamma_{\alpha\beta}^\mu V_{\beta j}(\mathbf{p},s,c)\bar{V}_{\gamma k}(\mathbf{p}',s',c')t_{kl}^b\gamma_{\gamma\delta}^\mu V_{\delta l}(\mathbf{p}',s',c') +$$
$$+\int \frac{d\mathbf{p}d\mathbf{p}'}{(2\pi)^6}\frac{1}{4|p_4||p_4'|}\bar{V}_{\alpha i}(\mathbf{p},s,c)t_{ij}^a\gamma_{\alpha\beta}^\mu V_{\delta l}(\mathbf{p},s,c)\bar{U}_{\gamma k}(\mathbf{p}',s',c')t_{kl}^b\gamma_{\gamma\delta}^\nu U_{\beta j}(\mathbf{p}',s',c')\left\langle \widetilde{A_\mu^a A_\nu^b}(\mathbf{p}+\mathbf{p}')\right\rangle$$

$$V\bar{V} = p_4\gamma_4 + \cos(\theta)(\mathbf{p}\gamma - im) - \frac{\overset{*}{\alpha}+\alpha}{2im}\sin(\theta)(\mathbf{p}^2 - im\mathbf{p}\gamma)$$

$$U\bar{U} = p_4\gamma_4 + \cos(\theta)(\mathbf{p}\gamma + im) + \frac{\overset{*}{\alpha}+\alpha}{2im}\sin(\theta)(\mathbf{p}^2 + im\mathbf{p}\gamma)$$

$$\langle\sigma|H_{ind}|\sigma\rangle = -\int \frac{d\mathbf{p}}{(2\pi)^3}\frac{2N_c p_4^2}{|p_4|}(1-\cos\theta) -$$
$$-\tilde{G}\int \frac{d\mathbf{p}d\mathbf{q}}{(2\pi)^6}\left\{-(3\tilde{I}-\tilde{J})\frac{p_4q_4}{|p_4||q_4|} + (4\tilde{I}-\tilde{J})\frac{pq}{|p_4||q_4|}\left(\sin\theta - \frac{m}{p}\cos\theta\right)\left(\sin\theta' - \frac{m}{q}\cos\theta'\right) -\right.$$
$$\left.-\left(2\tilde{I}\delta_{ij} + 2\tilde{J}_{ij} - \tilde{J}\delta_{ij}\right)\frac{p_iq_j}{|p_4||q_4|}\left(\cos\theta + \frac{m}{p}\sin\theta\right)\left(\cos\theta' + \frac{m}{q}\sin\theta'\right)\right\}$$

$$p = |\underset{\sim}{\mathbf{p}}|, q = |\mathbf{q}|, \tilde{I} = \tilde{I}(\mathbf{p}+\mathbf{q}), \tilde{J}_{ij} = J_{\mu\nu}(p).\tilde{J}_{ij}(\mathbf{p}+\mathbf{q}), \tilde{J} = \sum_{i=1}^3 \tilde{J}_{ii}, p_4^2 + p^2 = q_4^2 + q^2 = -m^2,$$

$$\theta' = \theta(q), \tilde{G} = (4\pi^2)^2 n\rho^4$$

$$\frac{d\langle\sigma|H_{ind}|\sigma\rangle}{d\theta} = 0.$$

$$W = \int^\Lambda \frac{d\mathbf{p}}{(2\pi)^3}\frac{d\mathbf{p}}{(2\pi)^3}\left[|p_4|(1-\cos\theta) - G\frac{p}{|p_4|}\left(\sin\theta - \frac{m}{p}\cos\theta\right)\int^\Lambda \frac{d\mathbf{q}}{(2\pi)^3}\frac{d\mathbf{q}}{(2\pi)^3}\frac{q}{|q_4|}\left(\sin\theta' - \frac{m}{q}\cos\theta'\right)\right]$$

$$(p^2+m^2)\sin\theta - M(p\cos\theta + m\sin\theta) = 0$$

$$M = 2G\int^\Lambda \frac{d\mathbf{p}}{(2\pi)^3}\frac{d\mathbf{p}}{(2\pi)^3}\frac{p}{|p_4|}\left(\sin\theta - \frac{m}{p}\cos\theta\right)$$

$$\langle\sigma|\bar{q}q|\sigma\rangle = \frac{iN_c}{\pi^2}\int_0^\Lambda dp\frac{p^2}{|p_4|}(p\sin\theta - m\cos\theta),$$

$$I(\mathbf{p}) = (2\pi)^3 G\delta(\mathbf{p})$$

$$W(m) = \int \frac{d\mathbf{p}}{(2\pi)^3}\left[|p_4|(1-\cos\theta) - G\frac{p^2}{|p_4|^2}\left(\sin\theta - \frac{m}{p}\cos\theta\right)^2\right]$$

$$|p_4|^3\sin\theta - 2G(p\cos\theta + m\sin\theta)(p\sin\theta - m\cos\theta) = 0$$

$$\cos\theta = \frac{p}{2G}$$

$$W_{\pm}(0) = -\frac{G^4}{15\pi^2}$$

$$\langle\sigma|\bar{q}q|\sigma\rangle(0) = \frac{iN_c G^3}{2\pi},$$

$$\sin\ \theta = \frac{M_\theta}{(p^2 + M_\theta)^{1/2}},$$

$$M_\theta = (4G^2 - p^2)^{1/2}$$

$$E(p) = \sqrt{p^2 + M_\theta^2}$$

$$I_G = \int\ dpG(p)$$

$$p_\theta = [m|M - m|]^{1/2}.$$

$$|p_4|^2 \sin\ \theta - \frac{4G}{\pi}\left(\cos\ \theta + \frac{m}{p}\sin\ \theta\right)\iint_0^\infty dqdx\frac{q}{|q_4|}(q\sin\ \theta' - m\cos\ \theta')I(x)\sin\,(px)\sin\,(qx) = 0$$

$$p^2\theta - \frac{4G}{\pi}\int_0^\infty dq(q\theta' - m)I(p,q) = 0$$

$$\theta = -\frac{4Gm}{\pi p^2}\int_0^\infty dqI(p,q)$$

$$\int_0^\infty dxe^{-ax}\sin\,(px)\sin\,(qx) =$$
$$= \frac{a}{2}\left(\frac{1}{a^2 + (p-q)^2} - \frac{1}{a^2 + (p+q)^2}\right)$$

$$\int_0^\infty dxe^{-a^2x^2}\sin\,(px)\sin\,(qx) =$$
$$= \frac{\sqrt{\pi}}{4a}\left(e^{-\frac{(p-q)^2}{4a^2}} - e^{-\frac{(p+q)^2}{4a^2}}\right)$$

$$i\dot{\Psi} = H\Psi, H = H_0 + V, V = fx,$$

$$\Psi = \Psi^{(0)} + \Psi^{(1)} + \cdots$$

$$\Psi^{(0)} = c_n e^{-i\lambda_n t}\psi_n, H_0\psi_n = \lambda_n\psi_n$$

$$\Psi^{(j)} = d_n^{(i)} e^{-i\lambda_n t}\psi_n$$

$$d_n^{(j)}(t) = -i\left(\overset{*}{\psi} x\psi_m\right)\int_0^t d\tau f(\tau)e^{i(\lambda_n - \lambda_m)\tau}d_m^{(j-1)}(\tau)$$

$$\overline{\mathrm{Tr}\{H\rho\}} = \int_0^T dt\mathrm{Tr}\{H\rho\}/T$$

$$\mathrm{Tr}\{V\rho\} = ic_k \overset{*}{c}_m \left(\psi_k x \overset{*}{\psi}_n\right)\left(\psi_n x \overset{*}{\psi}_m\right) \times$$
$$\times\, e^{i(\lambda_n-\lambda_k)t} \int_0^t d\tau f(\tau) f(t) e^{i(\lambda_k-\lambda_n)\tau} + \text{ c.c}$$

$$\overline{f(\tau)f(t)} \sim \overline{f^2} F(\tau - t)$$

$$\sum_n |\psi_n\rangle \left\langle \overset{*}{\psi}_n \right| = 1$$

$$\mathrm{Tr}\{V\rho^{(2)}\} \simeq ic_k \overset{*}{c}_m \left(\psi_k x^2 \overset{*}{\psi}_m\right) \overline{f^2}\, \overline{e^{i(\lambda_m-\lambda_k)t}} + \text{ c.c.}$$

$$i\dot{\rho} = H\rho - \rho H'$$

$$\rho^{(0)} = c_{nm} e^{i\lambda_n t} \overset{*}{\psi}_n(y) e^{-i\lambda_m t} \psi_m(x)$$

$$\rho^{(1)} = d_{nm}^{(1)} e^{i\lambda_n t} \overset{*}{\psi}_n(y) e^{-i\lambda_m t} \psi_m(x)$$

$$d_{nm}^{(1)} = -i\, c_{nk} \left(\overset{*}{\psi}_m x \psi_k\right) \int_0^t d\tau f(\tau) e^{i(\lambda_n-\lambda_k)\tau} +$$
$$+i\, c_{km} \left(\overset{*}{\psi}_k y \psi_n\right) \int_0^t d\tau f(\tau) e^{i(\lambda_k-\lambda_m)\tau}$$

$$\rho^{(1)} = -ic_{nk} \left(\overset{*}{\psi}_m x \psi_k\right) e^{i(\lambda_n-\lambda_m)t} \overset{*}{\psi}_n(y) \psi_m(x) \int_0^t d\tau f(\tau) e^{i(\lambda_n-\lambda_k)\tau} +$$
$$+ic_{kn} \left(\overset{*}{\psi}_k y \psi_m\right) e^{i(\lambda_m-\lambda_n)t} \overset{*}{\psi}_m(y) \psi_n(x) \int_0^t d\tau f(\tau) e^{i(\lambda_k-\lambda_n)\tau}$$

$$\rho = e^{i\left(H_0'-H_0\right)t} \tilde{\rho}$$

$$\tilde{\rho}(t) = -i \int_0^t d\tau e^{i\left(H_0-H_0'\right)\tau} f(\tau)(x-y) e^{i\left(H_0'-H_0\right)\tau} \tilde{\rho}(\tau) + \tilde{\rho}(0)$$

$$\mathrm{Tr}\{H\rho\} = \mathrm{Tr}\Big\{[H_0 + f(t)x](-i) e^{i\left(H_0'-H_0\right)t} \times$$
$$\times \int_0^t d\tau e^{i\left(H_0-H_0'\right)\tau} f(\tau)(x-y) \rho(x,y;\tau)\Big|_{y\to x}\Big\}$$

$$H_0 = -\frac{1}{2m}\frac{d^2}{dx^2} + \frac{m\omega^2}{2} x^2$$

$$\overset{*}{\psi}(y_2,t_2)\psi(x_2,t_2) = \iint_{-\infty}^{\infty} dx_1 dy_1 \overset{*}{K}(y_2,t_2;y_1,t_1)$$
$$\times K(x_2,t_2;x_1,t_1) \overset{*}{\varphi}(y_1,t_1) \varphi(x_1,t_1)$$

$$K(x_2,t_2;x_1,t_1) = \left(\frac{m\omega}{2\pi i \sin\, \omega T}\right)^{1/2} e^{iS}$$

$$S = \frac{m\omega}{2\sin\ \omega T}[\cos\ \omega T(x_2^2 + x_1^2) - 2x_2x_1 + 2x_2\phi_2 + 2x_1\phi_1 - F]$$

$$\phi_1 = \frac{1}{m\omega}\int_{t_1}^{t_2} d\tau f(\tau)\sin\ \omega(t_2 - \tau)$$
$$\phi_2 = \frac{1}{m\omega}\int_{t_1}^{t_2} d\tau f(\tau)\sin\ \omega(\tau - t_1)$$

$$\cos\ \omega T(x_2^2 + x_1^2) - 2x_2x_1 + 2x_2\phi_2 + 2x_1\phi_1 =$$
$$= \cos\ \omega T(\tilde{x}_2^2 + x_1^2) - 2\tilde{x}_2x_1 + 2(\cos\ \omega T\phi_1 + \phi_2)\tilde{x}_2 +$$
$$+\cos\ \omega T\phi_1^2 + 2\phi_1\phi_2$$

$$\bar{\phi}_1 = \frac{1}{m\omega}\int_{t_1}^{t_2} d\tau f(\tau)\cos\ \omega(t_2 - \tau)$$

$$K_0(x_2, t_2; x_1, t_1) = \sum_{n=0}^{\infty} e^{-i\lambda_n T}\overset{*}{\psi}_n(x_2)\psi_n(x_1)$$

$$\overset{*}{K}K = \sum_{n=0}^{\infty} e^{i\lambda_n T}\psi_n(\tilde{y}_2)\overset{*}{\psi}_n(y_1)e^{-im\omega\bar{\phi}_1\tilde{y}_2} \times$$
$$\times e^{im\omega\bar{\phi}_1\tilde{x}_2}\sum_{m=0}^{\infty} e^{-i\lambda_m T}\overset{*}{\psi}_m(x_2)\psi_m(x_1)\Big|_{y_2=x_2}$$

$$\int_{-\infty}^{\infty} dx_2\psi_n(\tilde{y}_2)e^{-im\omega\bar{\phi}_1\tilde{y}_2}H(x_2)e^{im\omega\bar{\phi}_1\tilde{x}_2}\overset{*}{\psi}_m(x_2)\Big|_{y_2=x_2}$$

$$e^{-im\omega\bar{\phi}_1\tilde{y}_2}\quad H(x_2)e^{im\omega\bar{\phi}_1\tilde{x}_2} = H_0(\tilde{x}_2) - \omega\bar{\phi}_1 i\frac{d}{d\tilde{x}_2} +$$
$$+(m\omega^2\phi_1 + f)\tilde{x}_2 + \frac{m\omega^2}{2}(\phi_1^2 + \bar{\phi}_1^2) + f\phi_1$$

$$\int_{-\infty}^{\infty} dx_2\overset{*}{K}\quad H(x_2)K = \sum_{n=0}^{\infty} H_{n,n}\psi_n(x_1)\overset{*}{\psi}_n(y_1) +$$
$$+\sum_{n=0}^{\infty} H_{n,n-1}e^{i\omega T}\psi_n(x_1)\overset{*}{\psi}_{n-1}(y_1) +$$
$$+\sum_{n=0}^{\infty} H_{n-1,n}e^{-i\omega T}\psi_{n-1}(x_1)\overset{*}{\psi}_n(y_1)$$

$$H_{n,n} = \left(n + \frac{1}{2}\right)\omega + \frac{m\omega^2}{2}(\phi_1^2 + \bar{\phi}_1^2) + f\phi_1$$
$$H_{n,n-1} = \overset{*}{H}_{n-1,n} = [m\omega^2(i\bar{\phi}_1 + \phi_1) + f]\left(\frac{n}{2m\omega}\right)^{1/2}$$

$$f(t) = F\sin\ \Omega t$$

$$m\omega^2\phi_1 = F\frac{\omega}{\Omega^2-\omega^2}(\Omega\sin\ \omega T - \omega\sin\ \Omega T)$$
$$m\omega^2\bar{\phi}_1 = F\frac{\Omega\omega}{\Omega^2-\omega^2}(\cos\ \Omega T - \cos\ \omega T)$$

$$\ddot{x}_c + \omega^2 x_c = -f/m$$

$$x_c = \frac{F}{m\omega}\frac{\Omega\sin\ \omega t - \omega\sin\ \Omega t}{\Omega^2-\omega^2}$$

$$\frac{m\omega^2}{2}(\phi_1^2+\bar{\phi}_1^2) + f\phi_1 = \frac{m}{2}\dot{x}_c^2 + \frac{m\omega^2}{2}x_c^2 + fx_c$$

$$\mathrm{Tr}\{H\rho\}|_{y_2=x_2} = \sum_{n,m=0}^{\infty} \overset{*}{c}_n H_{n,m} c_m$$

$$\overline{H_{n,n}} = \int_0^T dt H_{n,n}/T$$

$$\overline{H_{n,n}} = \left(n+\frac{1}{2}\right)\omega + \frac{F^2}{m}\frac{\Omega^2+3\omega^2}{4(\Omega^2-\omega^2)^2} + \frac{3F^2}{8m}\frac{1}{\Omega^2-\omega^2}\frac{\sin\ 2\Omega T}{\Omega T} + \\ + \frac{F^2}{2m\omega^2}\frac{\Omega\omega}{\Omega^2-\omega^2}\left[\frac{\Omega-2\omega}{\Omega-\omega}\frac{\sin\,(\Omega-\omega)T}{(\Omega-\omega)T} - \frac{\Omega+2\omega}{\Omega+\omega}\frac{\sin\,(\Omega+\omega)T}{(\Omega+\omega)T}\right].$$

$$H_{eff}(x) = e^{-im\omega\bar{\phi}_1\tilde{y}}H(x)e^{im\omega\bar{\phi}_1\tilde{x}},$$

$$H_{eff}(x) = \frac{(\hat{p}+p_c)^2}{2} + \frac{m\omega^2}{2}(\hat{x}+x_c)^2 + f(\hat{x}+x_c)$$

$$\mathcal{L} = \bar{q}\big(i\gamma_\mu\partial_\mu + im\big)q - G'\bar{q}t^a\gamma_\mu q\int\ d\mathbf{y}I_{\mu\nu}(\mathbf{x}-\mathbf{y})\bar{q}'t^a\gamma_\nu q'$$

$$q = q(\mathbf{x},t), \bar{q} = \bar{q}(\mathbf{x},t), q' = q(\mathbf{y},t), \bar{q}' = \bar{q}(\mathbf{y},t)$$

$$\sum_{a=1}^{N_c^2-1} t_{ij}^a t_{kl}^a \approx \frac{1}{2}\delta_{il}\delta_{kj}$$

$$\gamma_\mu\otimes\gamma_\mu = 1\otimes 1 + i\gamma_5\otimes i\gamma_5 - \frac{1}{2}\gamma_\mu\otimes\gamma_\mu - \frac{1}{2}\gamma_\mu\gamma_5\otimes\gamma_\mu\gamma_5$$

$$\mathcal{L} = \bar{q}\big(i\gamma_\mu\partial_\mu + im\big)q - G'\int\ d\mathbf{y}I(\mathbf{x}-\mathbf{y})\langle\bar{q}q'\rangle\bar{q}'q$$

$$-iM(\mathbf{p}) = \int\ \frac{dq}{(2\pi)^4}G'I(\mathbf{p}-\mathbf{q})\mathrm{Tr}\frac{1_c}{\hat{q}+im+iM(\mathbf{q})}$$

$$\int_{-\infty}^{\infty} \frac{dq_4}{2\pi} \frac{1}{q_4^2 + \mathbf{q}^2 + (m + M(\mathbf{q}))^2}$$
$$= \frac{1}{2} \frac{1}{[\mathbf{q}^2 + (m + M(\mathbf{q}))^2]^{1/2}}$$

$$M(\mathbf{p}) = 2G'N_c \int \frac{d\mathbf{q}}{(2\pi)^3} I(\mathbf{p} - \mathbf{q}) \frac{m + M(\mathbf{q})}{[\mathbf{q}^2 + (m + M(\mathbf{q}))^2]^{1/2}}$$

$$M = 2G'N_c \int^{\Lambda} \frac{d\mathbf{q}}{(2\pi)^3} \frac{m + M}{[\mathbf{q}^2 + (m + M)^2]^{1/2}}$$

$$M(\mathbf{p}) = 2G'N_c \frac{m + M(\mathbf{p})}{[\mathbf{p}^2 + (m + M(\mathbf{p}))^2]^{1/2}}$$

$$\sum_{a=1}^{N_c^2-1} t_{ij}^a t_{jk}^a = \frac{N_c^2 - 1}{2N_c} \delta_{ik}$$

$$M_\theta(\mathbf{p}) = 2G' \frac{N_c^2 - 1}{N_c} \int \frac{d\mathbf{q}}{(2\pi)^3} I(\mathbf{p} - \mathbf{q}) \frac{|\mathbf{q}|}{|q_4|} \sin\ \theta(q)$$

$$M(p) = [(2G'N_c)^2 - p^2]^{1/2}$$

$$M(p) = \left[\left(2G' \frac{N_c^2 - 1}{N_c}\right)^2 - p^2\right]^{1/2}$$

$$|M(p)| \to \left(2G' \frac{N_c^2 - 1}{N_c}\right)^2 m/p^2$$

$$\mathcal{L} = \bar{q}(i\gamma_\mu \partial_\mu + im)q - G \int dy I(x - y) \langle \bar{q}q' \rangle \bar{q}'q$$

$$M = 4GN_c \frac{m + M}{p^2 + (m + M)^2}$$

$$p^2 + (m + M)^2 = 4N_c G \frac{m + M}{M} > 0$$

$$\int \frac{d\mathbf{q}}{(2\pi)^3} \to \int \frac{dl_4}{2\pi} \int \frac{d\mathbf{q}}{(2\pi)^3} I(l_4) \frac{1}{|p_4| + |q_4| - il_4}$$

$$W(m) = \int \frac{d\mathbf{p}}{(2\pi)^3} \left[|p_4|(1 - \cos\ \theta) - G \frac{p^2}{|p_4|^2} \frac{1}{2|p_4|} \left(\sin\ \theta - \frac{m}{p} \cos\ \theta\right)^2\right]$$

$$\mathcal{P}_{Ki} = \frac{d_K}{\Omega_0} \int d\Omega R_{ii}^K(\Omega) \mathcal{R}(\Omega).$$

$$\langle K \mid w \rangle^2 = \langle w | \mathcal{P}_K | w \rangle = \frac{d_K}{\Omega_0} \int d\Omega R_{ij}^K \langle w | \mathcal{R} | w \rangle.$$

$$\mathcal{R}c_i^\dagger\mathcal{R}^{-1} = \sum_j R_{ij}c_j^\dagger;\ \mathcal{R}c_i\mathcal{R}^{-1} = \sum_j R_{ij}^* c_j$$

$$|w\rangle = \prod_\alpha^n \left(u_\alpha + v_\alpha a_\alpha^\dagger a_{\bar{\alpha}}^\dagger\right)|\rangle$$

$$\langle w|\mathcal{R}|w\rangle = \frac{(-1)^n}{\prod_\alpha^n\ (v_\alpha)^2}\mathrm{pf}\begin{bmatrix} V^TU & V^TR^TV^* \\ -V^\dagger RV & U^\dagger V^* \end{bmatrix}$$

$$|w\rangle = \frac{\det C}{\prod_{\alpha=1}^n\ v_\alpha}\beta_1\beta_2\dots\beta_{2n}|\rangle$$

$$\langle w|\mathcal{R}|w'\rangle = (-1)^n\frac{\det C^*\det C'}{\prod_\alpha^n\ v_\alpha v_\alpha'}\mathrm{pf}\begin{bmatrix} V^TU & V^TR^TV'^* \\ -V'^\dagger RV & U'^\dagger V'^* \end{bmatrix}$$

$$\prod_q c_q^\dagger \prod_\alpha^n \left(u_\alpha + v_\alpha a_\alpha^\dagger a_{\bar{\alpha}}^\dagger\right)|\rangle$$

$$|qw\rangle = c_q^\dagger|w\rangle = \sum_j q_j c_j^\dagger|w\rangle$$

$$\langle qw|\mathcal{R}|q'w'\rangle = (-1)^n\frac{\det C^*\det C'}{\prod_\alpha^n\ v_\alpha v_\alpha'}\mathrm{pf}\begin{bmatrix} V^TU & \mathbf{0}^T & V^TR^T\mathbf{q}'^T & V^TR^TV'^* \\ \mathbf{0} & 0 & \mathbf{q}^*R^T\mathbf{q}'^T & \mathbf{q}^*R^TV'^* \\ -\mathbf{q}'RV & -\mathbf{q}'R\mathbf{q}^\dagger & 0 & \mathbf{0} \\ -V'^\dagger RV & -V'^\dagger R\mathbf{q}^\dagger & \mathbf{0}^T & U'^\dagger V'^* \end{bmatrix}$$

$$\langle\alpha_1\alpha_2\dots\alpha_k\rangle = \mathrm{pf}\left(S_{i,j}\right)$$

$$\left\langle\beta_{2n}^\dagger\beta_{2n-1}^\dagger\dots\beta_1^\dagger c_q\tilde{c}_{q'}^\dagger\tilde{\beta}_1'\tilde{\beta}_2'\dots\tilde{\beta}_{2n}'\right\rangle$$

$$\begin{aligned}
(V^TU)_{\mu\nu} &= \langle|\beta_\mu^\dagger\beta_\nu^\dagger|\rangle \\
(V^TR^T\mathbf{q}'^T)_\mu &= \langle|\beta_\mu^\dagger\tilde{c}_{q'}^\dagger|\rangle = \sum_j q_j'\langle|\beta_\mu^\dagger\tilde{c}_j^\dagger|\rangle \\
(V^TR^TV'^*)_{\mu\nu} &= \langle|\beta_\mu^\dagger\tilde{\beta}_\nu'|\rangle \\
\mathbf{q}^*R^T\mathbf{q}'^T &= \sum_{jj'} q_j^*q_{j'}'\langle|c_j\tilde{c}_{j'}^\dagger|\rangle \\
(\mathbf{q}^*R^TV'^*)_\nu &= \sum_j q_j^*\langle|c_j\tilde{\beta}_\nu'|\rangle \\
\left(U'^\dagger V'^*\right)_{\mu\nu} &= \langle|\tilde{\beta}_\mu'\tilde{\beta}_\nu'|\rangle
\end{aligned}$$

$$\langle w|\bar{\beta}_{\mu_r}\cdots\bar{\beta}_{\mu_1}\mathcal{R}\bar{\beta}_{\nu_1}'^\dagger\cdots\bar{\beta}_{\nu_s}'^\dagger|w'\rangle = (-1)^n(-1)^{r(r-1)/2}\frac{\det C^*\det C'}{\prod_\alpha^n\ v_\alpha^*v_\alpha'}\mathrm{pf}\begin{bmatrix} V^TU & V^T\mathbf{p}^\dagger & V^TR^T\mathbf{q}'^T & V^TR^TV'^* \\ -\mathbf{p}^*V & \mathbf{q}^*\mathbf{p}^\dagger & \mathbf{q}^*R^T\mathbf{q}^T & \mathbf{q}^*R^TV'^* \\ -\mathbf{q}'RV & -\mathbf{q}'R\mathbf{q}^\dagger & \mathbf{p}'\mathbf{q}^T & \mathbf{p}'V'^* \\ -V'^\dagger RV & -V'^\dagger R\mathbf{q}^\dagger & -V'^\dagger\mathbf{p}'^T & U'^\dagger V'^* \end{bmatrix}$$

$$|qw\rangle = c_{1/2}^{\dagger}\left(u + vc_{5/2}^{\dagger}c_{-5/2}^{\dagger}\right)|\rangle$$

$$P_{\Lambda} \equiv \int_{-\Lambda_{\max}}^{\Lambda_{\max}} dhP(h, t_e)$$

$$h \gtrsim h_{\text{classical}} \equiv \left(\frac{3}{-2\pi\lambda}\right)^{1/3} H \gg \Lambda_{\max}$$

$$V(h) = \frac{\lambda}{4}h^4$$

$$\ddot{h} + 3H\dot{h} - \left(\frac{\vec{\nabla}}{a}\right)^2 h + V'(h) = 0.$$

$$\delta h(x,t) = \int \frac{d^3k}{(2\pi)^3} a_{\vec{k}} \delta h_k(t) e^{i\vec{k}\cdot\vec{x}} + \text{ h.c.}$$

$$\delta\ddot{h}_k(t) + 3H\delta\dot{h}_k(t) + \left\{\left(\frac{k}{a}\right)^2 + 3\lambda\langle\delta h^2(t)\rangle\right\}\delta h_k(t) = 0,$$

$$\langle\delta h^2(t)\rangle = \int_{k=1/L}^{k=\epsilon aH} \frac{d^3k}{(2\pi)^3}|\delta h_k(t)|^2$$

$$|\lambda|\langle\delta h^2(t)\rangle \ll H^2$$

$$\delta h_k(t) = \frac{H}{\sqrt{2k^3}}\left(1 - i\frac{k}{aH}\right)e^{i\frac{k}{aH}}$$

$$3H\delta\dot{h}_k(t) + 3\lambda\langle\delta h^2(t)\rangle\delta h_k(t) = 0$$

$$\int \frac{d}{dt}|\delta h_k(t)|^2 = \frac{d}{dt}\left(\int |\delta h_k(t)|^2\right) - \frac{4\pi k^2}{(2\pi)^3}|\delta h_k(t_k)|^2 \frac{d}{dt}(\epsilon aH) = \frac{d}{dt}\langle\delta h^2(t)\rangle - \frac{H^3}{4\pi^2}$$

$$\frac{d}{dt}\langle\delta h^2(t)\rangle = -\frac{2\lambda}{H}\langle\delta h^2(t)\rangle^2 + \frac{H^3}{4\pi^2}$$

$$\langle\delta h^2(t)\rangle = \frac{1}{\sqrt{-2\lambda}}\frac{H^2}{2\pi}\tan\left(\sqrt{-2\lambda}\frac{\mathcal{N}}{2\pi}\right)$$

$$\langle\delta h^2(t)\rangle = \frac{H^2\mathcal{N}}{4\pi^2}$$

$$\mathcal{N}_{\max} = \frac{\pi^2}{\sqrt{-2\lambda}}$$

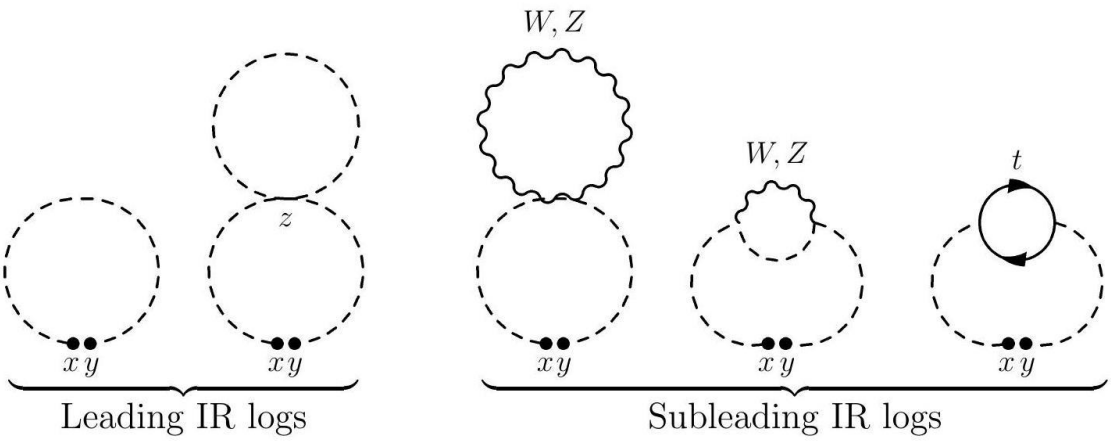

$$\langle \mathcal{O}(t)\rangle = \sum_n (-i)^n \int_{-\infty}^{t} dt_1 \cdots \int_{-\infty}^{t_{n-1}} dt_n \langle [[\mathcal{O}^I(t), H^I(t_n)], \cdots H^I(t_1)]\rangle$$

$$H^I = \frac{1}{4}\lambda (h^I(z))^4 + \frac{1}{2}\delta m^2 (h^I(z))^2 + \frac{1}{2}\delta\xi R(z)(h^I(z))^2.$$

$$\begin{aligned}\langle h(t,\vec{x})h(t,\vec{y})\rangle =& \langle h^I(t,\vec{x})h^I(t,\vec{y})\rangle \\ &+(-i)\int_{-\infty}^{t} dt_z \sqrt{-g(t_z)} \int d^3\vec{z} \langle [h^I(t,\vec{x})h^I(t,\vec{y}) \\ &\frac{1}{4}\lambda (h^I(z))^4 + \frac{1}{2}\delta m^2 (h^I(z))^2 + \frac{1}{2}\delta\xi R(z)(h^I(z))^2 \Big]\Big\rangle\end{aligned}$$

$$R = 12H^2$$

$$\rho(x,y) = i\langle [h^I(x), h^I(y)]\rangle, F(x,y) = \frac{1}{2}\langle \{h^I(x), h^I(y)\}\rangle,$$

$$\langle h(t,\vec{x})h(t,\vec{y})\rangle = F(x,y) - \int^{t} d^4\, d^4z a^3(t_z)[F(x,z)\rho(y,z) + \rho(x,z)F(y,z)](3\lambda F(z,z) + \delta m^2 + \delta\xi R(z))$$

$$F(x,y) = \frac{1}{2}\int \frac{d^3k}{(2\pi)^3} h_k(t_x) h_k^*(t_y) e^{i\vec{k}\cdot(\vec{x}-\vec{y})} + \text{ c.c.}$$

$$\begin{aligned}3\lambda F(z,z) &= 3\lambda \int_{\Lambda_{IR}}^{a\Lambda} \frac{d^3k}{(2\pi)^3} |h_k(t_z)|^2 \\ &= 3\lambda \left[\frac{\Lambda^2}{8\pi^2} + \frac{H^2}{8\pi^2} \ln\left[\left(\frac{a\Lambda}{\Lambda_{IR}}\right)^2\right]\right]\end{aligned}$$

$$\delta m^2 = -3\lambda(\mu)\frac{\Lambda^2}{8\pi^2}, \qquad 12\delta\xi = -\frac{3\lambda(\mu)}{4\pi^2}\log\left(\frac{\Lambda^2}{\mu^2}\right)$$

$$3\lambda F(z,z) + \delta m^2 + \delta\xi R = \frac{3\lambda(\mu)H^2}{8\pi^2}\left(2\mathcal{N} + \ln\frac{\mu^2}{H^2}\right)$$

$$F(t,\vec{x};t,\vec{y}) = \frac{H^2}{4\pi^2}\left(\ln\frac{1}{\Lambda_{IR}r} + 1 - \gamma\right) + \frac{1}{2\pi^2}\frac{1}{a^2r^2}$$
$$\approx \frac{H^2}{4\pi^2}\mathcal{N}$$

$$-3\lambda\int^t d^4\, d^4z a^3(t_z)\frac{H^2}{8\pi^2}H(t_z - t_0)[F(x,z)\rho(y,z) + \rho(x,z)F(y,z)]$$
$$= (-i)3\lambda\int_{t_z,k} a^3(t_z)\frac{H^2}{8\pi^2}H(t_z - t_0)\left[u_k^2(t)u_k^{*2}(t_z)e^{-i\vec{k}\cdot(\vec{x}-\vec{y})} - \text{ h.c.}\right]$$
$$\approx -\frac{\lambda}{24\pi^2}H^2\mathcal{N}^3$$

$$\langle\delta h^2(t)\rangle_{\text{HF}} \approx \frac{H^2}{4\pi^2}\mathcal{N} - \frac{\lambda H^2}{24\pi^4}\mathcal{N}^3$$

$$\mathcal{N} > \pi\sqrt{\frac{6}{|\lambda|}} \equiv \mathcal{N}_c \gtrsim \mathcal{N}_{\max}$$

$$\langle\delta h^2(t)\rangle = \frac{\hbar H^2}{4\pi^2}(\mathcal{N} + c_1) - \frac{\hbar^2\lambda H^2}{24\pi^4}(\mathcal{N}^3 + d_1\mathcal{N}^2 + d_2\mathcal{N} + d_3) + \mathcal{O}(\hbar^3)$$

$$H = \frac{1}{\sqrt{2}}\begin{pmatrix}\chi_1 + i\chi_2 \\ \bar{h} + \delta h + i\chi_3\end{pmatrix}$$

$$3H\dot{h}_k(t) + \lambda\left(3\langle\delta h^2(t)\rangle + \sum_i \langle\delta\chi_i^2(t)\rangle\right)h_k(t) \approx 3H\dot{h}_k(t) + 6\lambda\langle\delta h^2(t)\rangle h_k(t) = 0.$$

$$\langle H^\dagger H\rangle = \frac{1}{\sqrt{-\lambda}}\frac{H^2}{2\pi}\tan\left(\sqrt{-\lambda}\frac{\mathcal{N}}{\pi}\right), \mathcal{N}_{\max} = \frac{\pi^2}{2\sqrt{-\lambda}}$$

$$\langle H^\dagger H\rangle \approx \frac{H^2}{2\pi^2}\mathcal{N} - \frac{\lambda H^2}{6\pi^4}\mathcal{N}^3$$

$$\frac{\partial P}{\partial t} = \frac{\partial}{\partial\delta h}\left[\frac{V'(\delta h)}{3H}P + \frac{H^3}{8\pi^2}\frac{\partial P}{\partial\delta h}\right]$$

$$\langle\delta h^n(t)\rangle = \int d\delta h(\delta h)^n P(\delta h, t)$$

$$\delta h \gtrsim \delta h_{\text{classical}} \equiv \left(\frac{3}{-2\pi\lambda}\right)^{1/3} H$$

$$|\delta h| \gtrsim \delta h_c \equiv \left(\frac{3}{-\lambda}\right)^{1/2} H$$

$$f_{\mathcal{N}} \equiv \frac{\int_{-\delta h_c}^{\delta h_c} d\delta h\{P(\delta h,\mathcal{N}) - P(\delta h,\mathcal{N}-1)\}}{\int_{-\delta h_c}^{\delta h_c} d\delta h P(\delta h,\mathcal{N}-1)}$$

$$W_c(\mu,\nu) := \inf_{\pi\in\mathcal{C}(\mu,\nu)} \int_{E\times E} c(x,y)d\pi(x,y)$$

$$W_c(\mu,\nu) = \sup\left\{\int_E f d\mu - \int_E f d\nu : |f(x)-f(y)| \le d(x,y)\ \forall x,y\in E\right\}$$

$$\langle\varphi|(\Pi f)|\psi\rangle = \int_E f(x)\langle\varphi|\Pi(dx)|\psi\rangle$$

$$\mathcal{E} \ni A \mapsto \mathrm{tr}[\Pi(A)\rho]$$

$$\int_E f d\Pi_\sharp\rho = \mathrm{tr}[(\Pi f)\rho]$$

$$\langle\phi \mid \psi\rangle = \int_E \overline{\phi(x)}\psi(x)d\mu(x)$$

$$\langle\phi|(\Pi f)|\psi\rangle = \int_E f(x)\overline{\phi(x)}\psi(x)d\mu(x)$$

$$\|\rho-\sigma\|_1 = \frac{1}{2}\mathrm{tr}|\rho-\sigma| = \frac{1}{2}\mathrm{tr}\left[\sqrt{(\rho-\sigma)^2}\right]$$

$$\|\rho-\sigma\|_1 = \sqrt{1-|\langle\psi \mid \varphi\rangle|^2}$$

$$\|\rho-\sigma\|_1 = \sup_{0\le H\le \mathbb{1}} \mathrm{tr}[H(\rho-\sigma)]$$

$$\|\mu-\nu\|_{\mathrm{TV}} = \sup_{f:E\to[0,1]} \int_E f d(\mu-\nu)$$

$$\mathrm{TV}(X,Y) := \|P_X - P_Y\|_{\mathrm{TV}} = \sup_{f:E\to[0,1]} \{\mathbb{E}[f(X)] - \mathbb{E}[f(Y)]\}$$

$$\|\Pi_\sharp\rho - \Pi_\sharp\sigma\|_{\mathrm{TV}} \le \|\rho-\sigma\|_1.$$

$$\mathrm{TV}\big(X_\rho, X_\sigma\big) \le \|\rho-\sigma\|_1$$

$$\|\rho-\sigma\|_{W_1} := \min\left\{\sum_{i=1}^n c_i : \rho-\sigma = \sum_{i=1}^n c_i\big(\rho^{(i)}-\sigma^{(i)}\big), \rho^{(i)},\sigma^{(i)} \in \mathcal{S}(\mathcal{H}), \mathrm{tr}_i\rho^{(i)} = \mathrm{tr}_i\sigma^{(i)} \forall i\right\}$$

$$\sum_{i=1}^n \left\|X^{(i)}\right\|_1$$

$$\|\rho-\sigma\|_{W_1} = \sup_{\|H\|_{\mathrm{Lip}}\le 1} \mathrm{tr}[H(\rho-\sigma)]$$

$$\|H\|_{\mathrm{Lip}} := 2\max_{i=1,\dots,n}\max_{H^{(i)}}\left\|H - \mathbb{1}^{(i)}\otimes H^{(i)}\right\|_\infty$$

$$\|\rho-\sigma\|_{W_1} \ge \|\rho-\sigma\|_1$$

$$\frac{1}{n}\|\rho-\sigma\|_{W_1} \leq \|\rho-\sigma\|_1$$

$$d_H(x,y) = \sum_{i=1}^{n} 1_{\{x_i \neq y_i\}}$$

$$W_1(\mu,\nu) := \sup_{\mathrm{Lip}(f)\leq 1} \int_{E^n} f d(\mu-\nu)$$

$$\|f\|_{\mathrm{Lip}} := 2 \max_{i=1,\ldots,n} \max_{f^{(i)}} \left\|f - f^{(i)}\right\|_\infty,$$

$$W_1(\Pi_\sharp \rho, \Pi_\sharp \sigma) \leq \|\rho-\sigma\|_{W_1}.$$

$$H^{(i)} := f^{(i)} \circ \left(\bigotimes_{j\neq i} \Pi_j \right)$$

$$W_1\left(\left(X_{\rho,i}\right)_{i=1}^n, \left(X_{\sigma,i}\right)_{i=1}^n\right) \leq \|\rho-\sigma\|_{W_1},$$

$$\sup_{\Pi} \mathrm{TV}\left(X_\rho, X_\sigma\right) = \|\rho-\sigma\|_1,$$

$$\sup_{(\Pi_i)_{i=1}^n} W_1\left(\left(X_{\rho,i}\right)_{i=1}^n, \left(X_{\sigma,i}\right)_{i=1}^n\right) \leq \|\rho-\sigma\|_{W_1},$$

$$|\psi\rangle = \frac{1}{2}\sum_{i,j=0}^{1} |i\rangle \otimes |j\rangle$$

$$|\Psi\rangle = \frac{1}{\sqrt{n!}} \sum_{\tau\in\mathfrak{S}_n} (-1)^\tau \bigotimes_{i=1}^{n} \left|\psi_{\tau(i)}\right\rangle \in \mathcal{S}\left(\mathcal{H}^{\otimes n}\right),$$

$$|\langle\Psi,\Phi\rangle|^2 = \left|\det\left(\langle\psi_i \mid \phi_j\rangle_{i,j=1\ldots,n}\right)\right|^2$$

$$\||\Psi\rangle\langle\Psi| - |\Phi\rangle\langle\Phi|\|_1 = \sqrt{1 - \left|\det\left(\langle\psi_i \mid \phi_j\rangle_{i,j=1\ldots,n}\right)\right|^2}.$$

$$\begin{aligned}\left|\det\left(\langle\psi_i \mid \phi_j\rangle_{i,j=1\ldots,n}\right)\right|^2 &= \det\left(\langle\psi_i \mid \phi_j\rangle_{i,j=1\ldots,n}\right)\det\left(\langle\phi_j \mid \psi_i\rangle_{i,j=1\ldots,n}\right) \\ &= \det\left(\left(\sum_{\ell=1}^{n} \langle\psi_i \mid \phi_\ell\rangle\langle\phi_\ell \mid \psi_j\rangle\right)_{i,j=1\ldots,n}\right) \\ &= \det\left(\langle\psi_i \mid K_\Phi \psi_j\rangle\right)_{i,j=1,\ldots,n}\end{aligned}$$

$$K_\Phi = \sum_{\ell=1}^{n} |\phi_\ell\rangle\langle\phi_\ell|,$$

$$\mathfrak{U}_\Phi := \left\{U: \mathcal{H} \to \mathcal{H} : U \text{ unitary such that } UK_\Phi U^\dagger = K_\Phi,\right\},$$

$$\det\left(\langle \psi_i \mid K_\Phi \psi_j \rangle\right)_{i,j=1,\dots,n} = \det\left(\langle \phi_i \mid \phi_j \rangle\right)_{i,j=1,\dots,n} = \det(\mathbb{1}_{\mathbb{C}^n}) = 1,$$

$$\| |\Psi\rangle\langle\Psi| - |\Phi\rangle\langle\Phi| \|_1 = 0$$

$$\frac{1}{n} K_\Phi = \mathrm{tr}_{2,\dots,n}[|\Phi\rangle\langle\Phi|]$$

$$\Gamma_\Phi^{(k)} := \binom{n}{k} \mathrm{tr}_{(k+1),\dots,n}[|\Phi\rangle\langle\Phi|]$$

$$\| |\Psi\rangle\langle\Psi| - |\Phi\rangle\langle\Phi| \|_{W_1} \leq n \sqrt{1 - \min_{V \in \mathfrak{U}_\Psi, U \in \mathfrak{U}_\Phi} \left| \frac{1}{n} \sum_{i=1}^{n} \langle V\psi_i \mid U\phi_i \rangle \right|^2}.$$

$$k \mapsto \frac{1}{k} \left\| \binom{n}{k}^{-1} \Gamma_\Phi^{(k)} - \binom{n}{k}^{-1} \Gamma_\Psi^{(k)} \right\|_{W_1}$$

$$|\Psi_k\rangle := \left(U^{\otimes k} \otimes \mathbb{1}_{\mathcal{H}}^{\otimes(n-k)} \right) |\Psi\rangle = \frac{1}{\sqrt{n!}} \sum_{\tau \in \mathfrak{S}_n} (-1)^\tau \bigotimes_{i=1}^{k} |\phi_{\tau(i)}\rangle \otimes \bigotimes_{i=k+1}^{n} |\psi_{\tau(i)}\rangle$$

$$|\Psi\rangle\langle\Psi| - |\Phi\rangle\langle\Phi| = \sum_{k=1}^{n} \rho_{k-1} - \rho_k$$

$$|\Psi_k\rangle = \mathbb{1}_{\mathcal{H}}^{\otimes(k-1)} \otimes U \otimes \mathbb{1}_{\mathcal{H}}^{\otimes(n-k)} |\Psi_{k-1}\rangle,$$

$$\mathrm{tr}_k \rho_k = \mathrm{tr}_k \rho_{k-1}$$

$$\| |\Psi\rangle\langle\Psi| - |\Phi\rangle\langle\Phi| \|_{W_1} \leq \sum_{k=1}^{n} \| \rho_k - \rho_{k-1} \|_1 = \sum_{k=1}^{n} \sqrt{1 - |\langle \Psi_k \mid \Psi_{k-1} \rangle|^2}$$

$$\begin{aligned} |\langle \Psi_k \mid \Psi_{k-1} \rangle|^2 &= \left| \frac{1}{n!} \sum_{\tau,\tau'} (-1)^\tau (-1)^{\tau'} \prod_{i=1}^{k-1} \langle \phi_{\tau(i)} \mid \phi_{\tau'(i)} \rangle \cdot \langle \phi_{\tau(k)} \mid \psi_{\tau(k)} \rangle \cdot \prod_{i=k+1}^{n} \langle \psi_{\tau(i)} \mid \psi_{\tau'(i)} \rangle \right|^2 \\ &= \left| \frac{1}{n!} \sum_{\tau} \langle \phi_{\tau(k)} \mid \psi_{\tau(k)} \rangle \right|^2 \\ &= \left| \frac{1}{n} \sum_{i=1}^{n} \langle \phi_i \mid \psi_i \rangle \right|^2 \end{aligned}$$

$$\tilde{H} = \sum_{j=1}^{k+1} \mathbb{1}^{(j)} \otimes H_j \in \mathcal{O}\left(\mathcal{H}^{\otimes(k+1)}\right),$$

$$
\begin{aligned}
&(k+1)\mathrm{tr}\left[H\left(\mathrm{tr}_{(k+1),\dots,n}[|\Psi\rangle\langle\Psi|]-\mathrm{tr}_{(k+1),\dots,n}[|\Phi\rangle\langle\Phi|]\right)\right]\\
&\quad=\sum_{j=1}^{k+1}\mathrm{tr}\left[H_j\mathrm{tr}_{j,k+2,\dots,n}[|\Psi\rangle\langle\Psi|-|\Phi\rangle\langle\Phi|]\right]\\
&\quad=\mathrm{tr}\left[\tilde{H}\mathrm{tr}_{k+2,\dots,n}[|\Psi\rangle\langle\Psi|-|\Phi\rangle\langle\Phi|]\right.\\
&\quad\le k\left\|\mathrm{tr}_{k+2,\dots,n}[|\Psi\rangle\langle\Psi|]-\mathrm{tr}_{k+2,\dots,n}[|\Phi\rangle\langle\Phi|]\right\|_{W_1}.
\end{aligned}
$$

$$
\frac{1}{k}\left\|\binom{n}{k}^{-1}\Gamma_{\Phi}^{(k)}-\binom{n}{k}^{-1}\Gamma_{\Psi}^{(k)}\right\|_{W_1}\le\frac{1}{k+1}\left\|\binom{n}{k+1}^{-1}\Gamma_{\Phi}^{(k+1)}-\binom{n}{k+1}^{-1}\Gamma_{\Psi}^{(k+1)}\right\|_{W_1}.
$$

$$
2\left\|H-H^{(i)}\otimes\mathbb{1}^{(i)}\right\|_{\infty}\le 1,
$$

$$
\tilde{H}^{(i)}=H_i+\sum_{j\neq i}H_j^{(i)}\otimes\mathbb{1}^{(j)},
$$

$$
2\left\|\tilde{H}-\tilde{H}^{(i)}\otimes\mathbb{1}^{(i)}\right\|_{\infty}\le 2\left\|\sum_{j\neq i}\left(H_j-H_j^{(i)}\right)\right\|_{\infty}\le k\ \square
$$

$$
\sqrt{1-\max_{V\in\mathfrak{D}_{\Psi},U\in\mathfrak{U}_{\Phi}}\left|\frac{1}{n}\sum_{i=1}^{n}\langle V\psi_i\mid U\phi_i\rangle\right|^2}\ll\sqrt{1-\left|\det\left(\langle\psi_i\mid\phi_j\rangle_{i,j=1\dots,n}\right)\right|^2}
$$

$$
|\phi_i\rangle:=(1-\varepsilon_i)|\psi_i\rangle+\sqrt{1-(1-\varepsilon_i)^2}|\psi_{n+i}\rangle,\ \text{for } i=1,\dots,n,
$$

$$
\det\left(\langle\psi_i\mid\phi_j\rangle_{i,j=1,\dots,n}\right)=\prod_{i=1}^{n}(1-\varepsilon_i)\overset{n\to\infty}{\to}\prod_{i=1}^{\infty}(1-\varepsilon_i)\in(0,1),
$$

$$
\frac{1}{n}\sum_{i=1}^{n}\langle\psi_i\mid\phi_i\rangle=1-\frac{1}{n}\sum_{i=1}^{n}\varepsilon_i\overset{n\to\infty}{\to}1.
$$

$$
\rho_m(x_1,\dots,x_m)=\det\left(K(x_i,x_j)_{i=1,\dots,m}\right)
$$

$$
\mathbb{E}\left[\prod_{i=1}^{k}\binom{\sharp(\mathcal{X}\cap B_i)}{m_i}m_i!\right]=\int_{B_1^{m_1}\times\dots\times B_k^{m_k}}\det\left(K(x_i,x_j)_{i=1,\dots,m}\right)d\mu(x_1)\dots,d\mu(x_m)
$$

$$
\mathbb{E}[\sharp(\mathcal{X}\cap B)]=\int_B\rho_1(x)d\mu(x)=\mathrm{tr}[\chi_B K\chi_B].
$$

$$
K=\sum_{i=1}^{\infty}\lambda_i|\psi_i\rangle\langle\psi_i|,K'=\sum_{i=1}^{\infty}\lambda_i'|\psi_i'\rangle\langle\psi_i'|
$$

$$
W_c(P_{\mathcal{X}},P_{\mathcal{X}'})\le\min_{\tau\in\mathfrak{S}_n}\sum_{i=1}^{n}W_2\left(|\psi_i|^2\mu,\left|\psi_{\tau(i)}'\right|^2\mu\right)
$$

$$c\left(\{x_i\}_{i=1}^n, \{y_j\}_{j=1}^n\right) = \min_{\sigma \in \mathfrak{S}_n} \sum_{i=1}^n \left|x_i - y_{\sigma(j)}\right|^2$$

$$\mathbb{E}[\sharp(\mathcal{X} \cap (1/4,1/2))] = \int_{1/4}^{1/2} 1dx = 1, \mathbb{E}[\sharp(\mathcal{X}' \cap (1/4,1/2))] = \int_{1/4}^{1/2} 0dx = 0.$$

$$\#(A,B) := \sharp(A \Delta B)$$

$$K = \sum_{i=1}^n |\psi_i\rangle\langle\psi_i|, K' = \sum_{i=1}^n |\psi_i'\rangle\langle\psi_i'|.$$

$$\mathrm{TV}(\chi,\chi') \leq \sqrt{1 - \left|\det\left(\langle\psi_i \mid \psi_j'\rangle_{i,j=1\ldots,n}\right)\right|^2}$$

$$W_\#(\chi,\chi') \leq n\sqrt{1 - \max_{V \in \mathfrak{U}_\Psi, U \in \mathfrak{U}_{\Psi'}} \left|\frac{1}{n}\sum_{i=1}^n \langle V\psi_i \mid U\psi_i'\rangle\right|^2},$$

$$K_\rho(x,x') = \sum_{\ell=1}^n \overline{\psi_\ell}(x)\psi_\ell(x')$$

$$\begin{aligned}
\mathbb{E}\left[f\left(X_\rho\right)\right] &= \langle \Psi \mid (\Pi f)\Psi\rangle \\
&= \frac{1}{n!}\sum_{\tau,\tau' \in \mathfrak{S}_n} (-1)^\tau(-1)^{\tau'} \bigotimes_{i=1}^n \langle\psi_{\tau(i)}|(\Pi f)\bigotimes_{i=1}^n |\psi_{\tau'(j)}\rangle \\
&= \frac{1}{n!}\sum_{\tau,\tau' \in \mathfrak{S}_n} (-1)^\tau(-1)^{\tau'} \int_{E^n} f(x_1,\ldots,x_n)\prod_{i=1}^n \overline{\psi_{\tau(i)}}(x_i)\psi_{\tau'(i)}(x_i)d\mu(x_i)
\end{aligned}$$

$$\begin{aligned}
\mathbb{E}\left[f\left(\left(X_{\rho,\sigma(i)}\right)_{i=1}^n\right)\right] &= \frac{1}{n!}\sum_{\tau,\tau' \in \mathfrak{S}_n} (-1)^\tau(-1)^{\tau'} \int_{E^n} f\left(x_{\sigma(1)},\ldots,x_{\sigma(n)}\right)\prod_{i=1}^n \overline{\psi_{\tau(i)}}(x_i)\psi_{\tau'(i)}(x_i)d\mu(x_i) \\
&= \frac{1}{n!}\sum_{\tau,\tau' \in \mathfrak{S}_n} (-1)^\tau(-1)^{\tau'} \int_{E^n} f(x_1,\ldots,x_n)\prod_{i=1}^n \overline{\psi_{\tau\circ\sigma^{-1}(i)}}(x_i)\psi_{\tau'\circ\sigma^{-1}(i)}(x_i)d\mu(x_i) \\
&= \frac{1}{n!}\sum_{\tau,\tau' \in \mathfrak{S}_n} (-1)^\tau(-1)^{\tau'} \int_{E^n} f(x_1,\ldots,x_n)\prod_{i=1}^n \overline{\psi_\tau(i)}(x_i)\psi_{\tau'(i)}(x_i)d\mu(x_i)
\end{aligned}$$

$$\begin{aligned}
P\left(X_{\rho,1} = X_{\rho,2}\right) &= \frac{1}{n!}\sum_{\tau,\tau' \in \mathfrak{S}_n} (-1)^\tau(-1)^{\tau'} \int_{E^n} 1_{x_1=x_2}\prod_{i=1}^n \overline{\psi_{\tau(i)}}(x_i)\psi_{\tau'(i)}(x_i)d\mu(x_i) \\
&= \frac{1}{n!}\sum_{\substack{\tau,\tau' \in \mathfrak{S}_n \\ \tau(i)=\tau'(i)\forall i>2}} (-1)^\tau(-1)^{\tau'} \int_{E^2} 1_{x_1=x_2}\prod_{i=1}^2 \overline{\psi_{\tau(i)}}(x_i)\psi_{\tau'(i)}(x_i)d\mu(x_i)
\end{aligned}$$

$$\sharp(\mathcal{X}_\rho \cap B_i) = \sum_{\ell=1}^{n} \chi_{B_i} \circ X_{\rho,\ell} \text{ for } i = 1, \dots, k$$

$$\mathcal{L} := \{\ell : \{1, \dots, n\} \to \{0,1, \dots, k\} : \sharp\ell^{-1}(i) = m_i \ \forall i = 1, \dots, k\}$$

$$\prod_{i=1}^{k} \binom{\sharp(\mathcal{X}_\rho \cap B_i)}{m_i} = \sum_{\ell \in \mathcal{L}} \prod_{i=1}^{n} \chi_{B_{\ell(i)}} \circ X_{\rho,i}.$$

$$\prod_{i=1}^{n} B_{\ell(i)} = B_1^{m_1} \times B^{m_2} \times \dots \times E^{n-m}$$

$$\sharp\mathcal{L} = \frac{n!}{m_1! \dots, m_k! \, (n-m)!}$$

$$\mathbb{E}\left[\prod_{i=1}^{m} \binom{\sharp(\mathcal{X}_\rho \cap B_i)}{m_i}\right] =$$

$$= \frac{\sharp\mathcal{L}}{n!} \sum_{\tau,\tau' \in \mathfrak{S}_n} (-1)^\tau (-1)^{\tau'} \int_{B_1^{m_1} \times \dots B_k^{m_k} \times E^{n-m}} \prod_{i=1}^{n} \overline{\psi_{\tau(i)}}(x_i) \psi_{\tau'(i)}(x_i) d\mu(x_i)$$

$$= \frac{\sharp\mathcal{L}}{n!} \sum_{\tau(i)=\tau'(i) \forall i=m+1,\dots,n} (-1)^\tau (-1)^{\tau'} \int_{B_1^{m_1} \times \dots B_k^{m_k}} \prod_{i=1}^{m} \overline{\psi_{\tau(i)}}(x_i) \psi_{\tau'(i)}(x_i) d\mu(x_i),$$

$$\prod_{i=1}^{m} \psi_{\tau'(i)}(x_i) = \prod_{i=1}^{m} \psi_{\tau'(\sigma(i))}(x_{\sigma(i)}) = \prod_{i=1}^{m} \psi_{\tau(i)}(x_{\sigma(i)})$$

$$\sum_{\tau(i)=\tau'(i) \forall i=m+1,\dots,n} (-1)^\tau (-1)^{\tau'} \prod_{i=1}^{m} \overline{\psi_{\tau(i)}}(x_i) \psi_{\tau'(i)}(x_i) =$$

$$= \sum_{\tau \in \mathfrak{S}_n} \sum_{\sigma \in \mathfrak{S}_m} (-1)^\sigma \prod_{i=1}^{m} \overline{\psi_{\tau(i)}}(x_i) \psi_{\tau(i)}(x_{\sigma(i)})$$

$$= \sum_{\tau \in \mathfrak{S}_n} \det\left(\left(\overline{\psi_{\tau(i)}}(x_i) \psi_{\tau(i)}(x_j)\right)_{i,j=1,\dots,m}\right)$$

$$\frac{\sharp\mathcal{L}}{n!} \sum_{\tau \in \mathfrak{S}_n} \det\left(\overline{\psi_{\tau(i)}}(x_i) \psi_{\tau(i)}(x_j)\right)_{i,j=1,\dots,m}\Bigg) = \det\left(K_\rho(x_i, x_j)_{i,j=1,\dots,m}\right).$$

$$\det\left(K_\rho(x_i, x_j)_{i,j=1,\dots,m}\right) = \det\left(\left(\sum_{\ell=1}^{n} \overline{\psi_\ell}(x_i) \psi_\ell(x_j)\right)_{i,j=1,\dots,m}\right)$$

$$= \sum_{\ell_1,\dots,\ell_m=1}^{n} \det\left(\left(\overline{\psi_{\ell_i}}(x_i) \psi_{\ell_i}(x_j)\right)_{i,j=1,\dots,m}\right)$$

$$\mathrm{TV}(X_\rho, X_{\rho'}) \leq \sqrt{1 - \left|\det\left(\langle \psi_i \mid \psi_j' \rangle_{i,j=1\ldots,n}\right)\right|^2}$$

$$W_1(X_\rho, X_{\rho'}) \leq n \sqrt{1 - \max_{V \in \mathfrak{U}_\Psi, U \in \mathfrak{U}_{\Psi'}} \left|\frac{1}{n}\sum_{i=1}^{n} \langle V\psi_i \mid U\psi_i' \rangle\right|^2}.$$

$$\mathrm{TV}(\chi, \chi') \leq \mathrm{TV}(X_\rho, X_{\rho'}) \text{ and } W_\#(\chi, \chi') \leq W_1(X_\rho, X_{\rho'})$$

$$\#(\{x_i\}_{i=1}^n, \{x_i'\}_{i=1}^n) = \sharp(\{x_i\}_{i=1}^n \Delta \{x_i'\}_{i=1}^n) \leq \sum_{i=1}^{n} 1_{\{x_i \neq x_i'\}},$$

$$K = \sum_{i=1}^{\infty} \lambda_i |\psi_i\rangle\langle\psi_i|, K' = \sum_{i=1}^{\infty} \lambda_i' |\psi_i'\rangle\langle\psi_i'|,$$

$$\mathrm{TV}(\mathcal{X}, \mathcal{X}') \leq \sum_{i=1}^{\infty} |\lambda_i - \lambda_i'| + \sum_{I} \sqrt{1 - \left|\det\left(\langle \psi_i \mid \psi_j' \rangle_{i,j \in I}\right)\right|^2}\, w(\lambda, \lambda', I)$$

$$W_\#(\mathcal{X}, \mathcal{X}') \leq \left(2 + \sum_{i=1}^{\infty} \lambda_i + \sum_{i=1}^{\infty} \lambda_i'\right)\left(\sum_{i=1}^{\infty} |\lambda_i - \lambda_i'|\right)^{1/2}$$
$$+ \sum_{I} \sharp I \sqrt{1 - \max_{V \in \mathfrak{U}_{(\psi_i)_{i \in I}}, U \in \mathfrak{U}_{(\psi_i')_{i \in I}}} \left|\frac{1}{\sharp I}\sum_{i \in I} \langle V\psi_i \mid U\psi_i' \rangle\right|^2}\, w(\lambda, \lambda', I), \quad (4.9)$$

$$w(\lambda, \lambda', I) := \prod_{i \in I} \min\{\lambda_i, \lambda_i'\} \prod_{i \notin I} (1 - \max\{\lambda_i, \lambda_i'\})$$

$$\begin{aligned}\mathrm{TV}(\mathcal{X}, \mathcal{X}') &\leq P(\mathcal{X} \neq \mathcal{X}') \\ &\leq P(\mathcal{J} \neq \mathcal{J}') + \sum_{I} P(\mathcal{X}_I \neq \mathcal{X}_I') P(\mathcal{J} = \mathcal{J}' = I)\end{aligned}$$

$$P(B_i = B_i' = 1) = \min\{\lambda_i, \lambda_i'\}, P(B_i = B_i' = 0) = 1 - \max\{\lambda_i, \lambda_i'\}$$

$$P(B \neq B) \leq \sum_{i} |\lambda_i - \lambda_i'|$$

$$P(\mathcal{J} = \mathcal{J}' = I) = \prod_{i \in I} \min\{\lambda_i, \lambda_i'\} \prod_{i \notin I} (1 - \max\{\lambda_i, \lambda_i'\}) = w(\lambda, \lambda', I)$$

$$P(\mathcal{X}_I \neq \mathcal{X}_I') \leq \sqrt{1 - \left|\det\left(\langle \psi_i \mid \psi_j' \rangle_{i,j \in I}\right)\right|^2}.$$

$$W_{\#}(\mathcal{X},\mathcal{X}') \leq \mathbb{E}[\#(\mathcal{X}\Delta\mathcal{X}')]$$
$$\leq \mathbb{E}[\max\{\#\mathcal{I},\#\mathcal{I}'\}I_{\mathcal{I}\neq\mathcal{I}'}] + \sum_{I} P\big(\#(\mathcal{X}_I\Delta\mathcal{X}_I')\big)P(\mathcal{I}=\mathcal{I}'=I).$$

$$\mathbb{E}[\max\{\#\mathcal{I},\#\mathcal{I}'\}I_{\mathcal{I}\neq\mathcal{I}'}] \leq \mathbb{E}[\#\mathcal{I}I_{\mathcal{I}\neq\mathcal{I}'}] + \mathbb{E}[\#\mathcal{I}I_{\mathcal{I}\neq\mathcal{C}I'}I_{\mathcal{I}\neq\mathcal{I}'}]$$
$$\leq \big(\mathbb{E}[(\#\mathcal{I})^2]^{1/2} + \mathbb{E}[(\#\mathcal{I}')^2]^{1/2}\big)P(B\neq B')^{1/2}$$
$$\leq \left(2+\sum_{i=1}^{\infty}\lambda_i + \sum_{i=1}^{\infty}\lambda_i'\right)\left(\sum_{i=1}^{\infty}|\lambda_i-\lambda_i'|\right)^{1/2},$$

$$\mathbb{E}[(\#I)^2] = \mathbb{E}\left[\left(\sum_i B_i\right)^2\right] \leq \sum_i \lambda_i + \left(\sum_i \lambda_i\right)^2 \leq \left(1+\sum_i \lambda_i\right)^2.$$

$$P\big(\#(\mathcal{X}_I\Delta\mathcal{X}_I')\big)P(\mathcal{I}=\mathcal{I}'=I) \leq w(\lambda,\lambda',I)\#I\sqrt{1-\max_{V\in\mathfrak{U}_{(\psi_i)_{i\in I'}},U\in\mathfrak{U}_{(\psi_i')_{i\in I}}}\left|\frac{1}{\#I}\sum_{i\in I}\langle V\psi_i \mid U\psi_i'\rangle\right|^2}$$

$$|\Omega\rangle \longrightarrow |0\rangle_1|0\rangle_2\ldots|0\rangle_L = |00\ldots0\rangle$$
$$c_\ell \longrightarrow \mathbb{c}_\ell \equiv \sigma_1^z\otimes\ldots\otimes\sigma_{\ell-1}^z\otimes\sigma_\ell^+\otimes\mathbb{1}_{\ell+1}\otimes\ldots\otimes\mathbb{1}_L,$$
$$c_\ell^\dagger c_\ell \longrightarrow \mathbb{c}_\ell^\dagger\mathbb{c}_\ell = (1-\sigma_\ell^z)/2,$$

$$|\Psi\rangle = \sum_{s_1\in\{0,1\}}\ldots\sum_{s_L\in\{0,1\}}\mathcal{T}_{s_1\ldots s_L}\big(c_1^\dagger\big)^{s_1}\ldots\big(c_L^\dagger\big)^{s_L}|\Omega\rangle$$
$$\longrightarrow \big|\Psi^{(JW)}\big\rangle \equiv \sum_{\{s_j\}\in\{0,1\}}\mathcal{T}_{s_1\ldots s_L}|s_1\ldots s_L\rangle$$

$$|\Sigma\rangle = \tilde{c}_1^\dagger\tilde{c}_2^\dagger\ldots\tilde{c}_N^\dagger|\Omega\rangle$$

$$\tilde{c}_\alpha^\dagger = \sum_{\ell=1}^{L}\phi_\alpha(\ell)c_\ell^\dagger$$

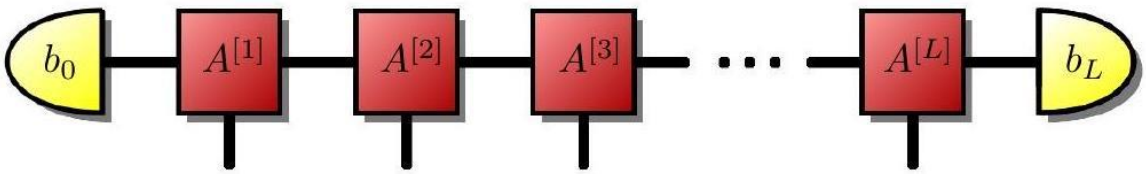

$$\sum_{\ell=1}^{L}\phi_\alpha(\ell)\phi_\beta^\star(\ell) = \delta_{\alpha,\beta}.$$

$$|\Sigma\rangle = \sum_{1\leq\ell_1<\cdots<\ell_N\leq L}\begin{vmatrix}\phi_1(\ell_1) & \cdots & \phi_1(\ell_N)\\ \vdots & \ddots & \vdots\\ \phi_N(\ell_1) & \cdots & \phi_N(\ell_N)\end{vmatrix}c_{\ell_1}^\dagger\ldots c_{\ell_N}^\dagger|\Omega\rangle,$$

$$\mathcal{T}_{s_1\dots s_L} = \sum_{1\le \ell_1<\dots<\ell_N\le L} \begin{vmatrix} \phi_1(\ell_1) & \cdots & \phi_1(\ell_N) \\ \vdots & \ddots & \vdots \\ \phi_N(\ell_1) & \cdots & \phi_N(\ell_N) \end{vmatrix} \prod_{\ell'\in\{\ell_q\}_q} \delta_{s_{\ell'},1} \prod_{\ell''\in\{\ell_q\}_q^c} \delta_{s_{\ell''},0},$$

$$\mathcal{T}_{s_1\dots s_L} = \left(b_0 \left| A_{s_1}^{[1]} \cdot A_{s_2}^{[2]} \cdot \dots \cdot A_{s_L}^{[L]} \right| b_L\right),$$

$$\tilde{c}_\alpha^\dagger = \sum_{s_1\dots s_L=0}^{1} \sum_{r_1\dots r_L=0}^{1} \left(\beta_0 \left| B_{s_1}^{[1]} \cdot \dots \cdot B_{s_L}^{r_1} \right| \beta_L\right) \left(c_1^\dagger\right)^{s_1} \dots \left(c_L^\dagger\right)^{s_L} |\Omega\rangle\langle\Omega| c_L^{r_L} \dots c_1^{r_1}.$$

$$\mathcal{M}_{s_1,\dots,s_L}^{r_1,\dots,r_L} := \left(\beta_0 \left| B^{[1]}{}_{s_1}^{r_1} \cdot \dots \cdot B^{[L]}{}_{s_L}^{r_L} \right| \beta_L\right),$$

$$\tilde{\mathbb{C}}_\alpha^\dagger = \sum_{s_1\dots s_L=0}^{1} \sum_{r_1\dots r_L=0}^{1} \left(\beta_0 \left| B^{[1]}{}_{s_1}^{r_1} \cdot \dots \cdot B^{[L]}{}_{s_L}^{r_L} \right| \beta_L\right), |s_1 \dots s_L\rangle\langle r_1 \dots r_L|,$$

$$\tilde{\mathbb{C}}_\alpha^\dagger = \sum_\ell \phi_\alpha(\ell)\mathbb{C}_\ell^\dagger = \sum_\ell \phi_\alpha(\ell)[\sigma_1^z \otimes \dots \otimes \sigma_{\ell-1}^z \otimes \sigma_\ell^- \otimes \mathbb{1}_{\ell+1} \otimes \dots \otimes \mathbb{1}_L].$$

$$\tilde{\mathbb{C}}_\alpha^\dagger = \left(1 \left| \prod_{\ell=1\leftarrow}^{\rightarrow L} [\mathbb{1}_\ell \otimes |\,0)(0| + \sigma_\ell^z \otimes |1)(1| + \phi_\alpha(\ell)\sigma_\ell^- \otimes |1)(0\,|] \right| 0\right) = \left(1 \left| \prod_{\ell=1\leftarrow}^{\rightarrow L} \mathcal{B}_\ell \right| 0\right)$$

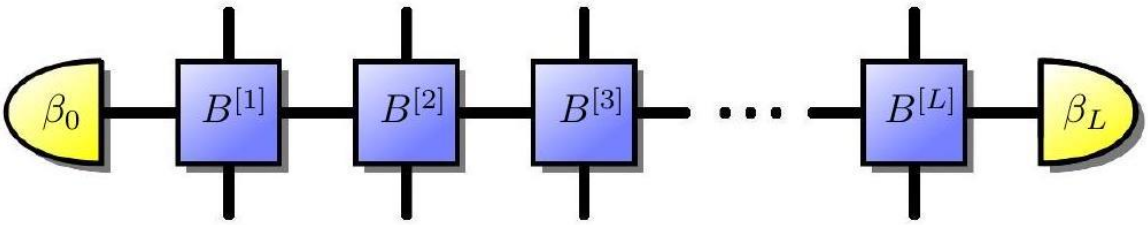

$$\mathcal{B}_\ell = \frac{1}{2}(\mathbb{1}_\ell + \sigma_\ell^z) \otimes (\mathbb{1}_f + \sigma_f^z) - \sigma_\ell^z \otimes \sigma_f^z + \phi_\alpha(\ell)\sigma_\ell^- \otimes \sigma_f^-.$$

$$B^{[\ell]}{}_0^0 = \mathbb{1}_f \qquad B^{[\ell]}{}_0^1 = 0$$
$$B^{[\ell]}{}_1^0 = \phi_\alpha(\ell)\sigma_f^- \qquad B^{[\ell]}{}_1^1 = \sigma_f^z$$
$$|\,\beta_L) = \begin{pmatrix}1\\0\end{pmatrix} = |\,0) \quad (\beta_0| = (0 \quad 1) = (1\,|$$

$$\tilde{c}_\alpha = \sum_{s_1\dots s_L=0}^{1} \sum_{r_1\dots r_L=0}^{1} \left(\beta_0 \left| B^{*[1]}{}_{r_1}^{s_1} \cdot \dots \cdot B^{*[L]}{}_{r_L}^{s_L} \right| \beta_L\right) \left(c_1^\dagger\right)^{s_1} \dots \left(c_L^\dagger\right)^{s_L} |\Omega\rangle\langle\Omega| c_L^{r_L} \dots c_1^{r_1}.$$

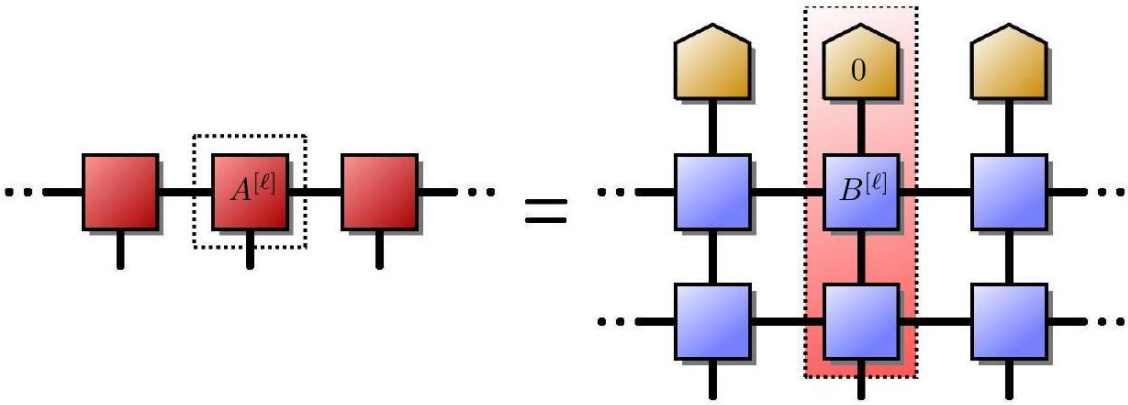

$$A_s^{[\ell]} = \sum_{q_2 \dots q_N = 0}^{1} \left(B^{[\ell,1]_s^{q_2}} \otimes B^{[\ell,2]\,q_3}_{\;\;q_2} \otimes \dots \otimes B^{[\ell,N]_{q_N}^{0}} \right)$$

$$A_0^{[\ell]} = \mathbb{1}_{2^N \times 2^N}$$

$$A_1^{[\ell]} = \sum_{\alpha=1}^{N} \phi_\alpha(\ell) \left(\sigma^{z \otimes \alpha - 1} \otimes \sigma^- \otimes \mathbb{1}_{2\times 2}^{\otimes N - \alpha} \right).$$

$$|\, b_L) = |\, \beta_L)^{\otimes N} \text{ and } (b_0 \,| = (\beta_0|^{\otimes N},$$

$$|\Sigma\rangle = \sum_{s_1 \dots s_L = 0}^{1} \left(b_0 \left| A_{s_1}^{[1]} \cdot \dots \cdot A_{s_L}^{[L]} \right| b_L \right) \left(c_1^\dagger \right)^{s_1} \dots \left(c_L^\dagger \right)^{s_L} |\Omega\rangle.$$

$$A_1^{[\ell]} = \phi_1(\ell)[\sigma^- \otimes \mathbb{1}] + \phi_2(\ell)[\sigma^z \otimes \sigma^-]$$

$$N = 2 \longrightarrow A_1^{[\ell]} = \begin{pmatrix} 0 & 0 & 0 & 0 \\ \phi_2(\ell) & 0 & 0 & 0 \\ \phi_1(\ell) & 0 & 0 & 0 \\ 0 & \phi_1(\ell) & -\phi_2(\ell) & 0 \end{pmatrix}$$

$$|\Sigma_2\rangle = \sum_{\ell_1 < \ell_2} \left(\phi_1(\ell_1)\phi_2(\ell_2) - \phi_1(\ell_2)\phi_2(\ell_1) \right) c_{\ell_1}^\dagger c_{\ell_2}^\dagger |\Omega\rangle$$

$$= \sum_{\ell_1 < \ell_2} \begin{vmatrix} \phi_1(\ell_1) & \phi_1(\ell_2) \\ \phi_2(\ell_1) & \phi_2(\ell_2) \end{vmatrix} c_{\ell_1}^\dagger c_{\ell_2}^\dagger |\Omega\rangle$$

$$\Theta = \tilde{c}_1^{\dagger q_1} \tilde{c}_2^{\dagger q_2} \tilde{c}_3^{\dagger q_3} \dots \tilde{c}_L^{\dagger q_L}$$

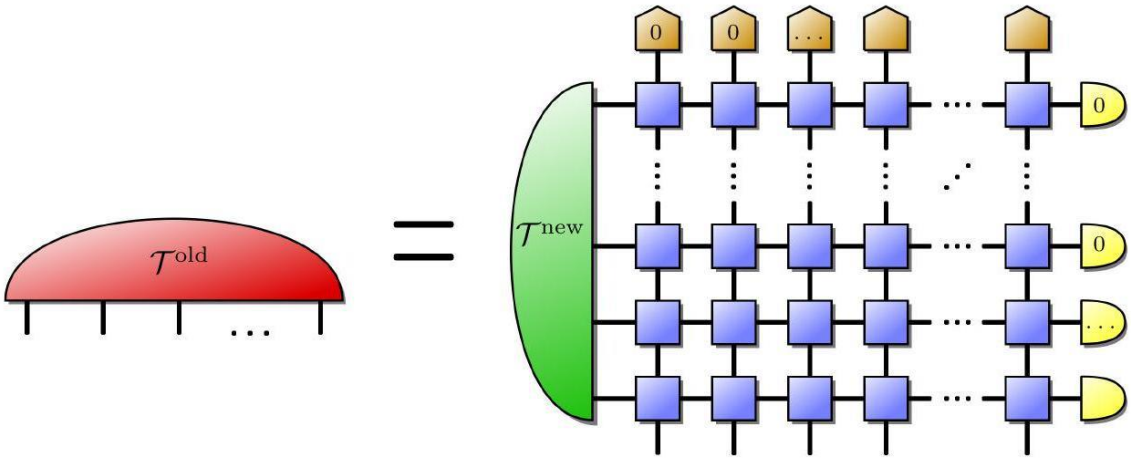

$$\left(q_1 \dots q_L\right| \longrightarrow \left|\Psi_{\vec{q}}\right\rangle = \tilde{c}_1^{\dagger q_1} \tilde{c}_2^{\dagger q_2} \dots \tilde{c}_L^{\dagger q_L} |\Omega\rangle.$$

$$|\Psi\rangle = \sum_{s_1 \dots s_L = 0}^{1} \mathcal{T}^{\text{old}}_{s_1 \dots s_L} \left(c_1^\dagger\right)^{s_1} \dots \left(c_L^\dagger\right)^{s_L} |\Omega\rangle = \sum_{q_1 \dots q_L = 0}^{1} \mathcal{T}^{\text{new}}_{q_1 \dots q_L} \left(\tilde{c}_1^\dagger\right)^{q_1} \dots \left(\tilde{c}_L^\dagger\right)^{q_L} |\Omega\rangle,$$

$$\mathcal{S}_{\text{VN}}(\rho) \equiv -\text{Tr}[\rho \log \rho] \leq \log D$$

$$\phi_\alpha^{[L]}(\ell) = \sqrt{2}\Theta(L/2 - \ell)\phi_\alpha(\ell) \text{ and } \phi_\alpha^{[R]}(\ell) = \sqrt{2}\Theta(\ell - L/2)\phi_\alpha(\ell)$$

$$\sum_\ell \phi_\alpha^{[L]}(\ell)\phi_\beta^{\star[R]}(\ell) = 0$$

$$\sum_\ell \phi_\alpha^{[L]}(\ell)\phi_\beta^{\star[L]}(\ell) = \sum_\ell \phi_\alpha^{[R]}(\ell)\phi_\beta^{\star[R]}(\ell) = \delta_{\alpha,\beta}.$$

$$\left\{\tilde{c}_{\alpha,L}, \tilde{c}_{\beta,L}^\dagger\right\} = \left\{\tilde{c}_{\alpha,R}, \tilde{c}_{\beta,R}^\dagger\right\} = \delta_{\alpha,\beta}$$

$$|\Sigma\rangle = \frac{1}{2^{N/2}} \left(\tilde{c}_{1,L}^\dagger + \tilde{c}_{1,R}^\dagger\right) \dots \left(\tilde{c}_{N,L}^\dagger + \tilde{c}_{N,R}^\dagger\right) |\Omega\rangle,$$

$$\begin{aligned}\rho_L^\Sigma &= \frac{1}{2}\text{Tr}_R\left[\left(\tilde{c}_{1,L}^\dagger + \tilde{c}_{1,R}^\dagger\right)|\Sigma'\rangle\langle\Sigma'|\left(\tilde{c}_{1,L} + \tilde{c}_{1,R}\right)\right] \\ &= \frac{1}{2}\left(\tilde{c}_{1,L}^\dagger \text{Tr}_R[|\Sigma'\rangle\langle\Sigma'|]\tilde{c}_{1,L} + \text{Tr}_R[|\Sigma'\rangle\langle\Sigma'|]\right) = \frac{1}{2}\left(\tilde{c}_{1,L}^\dagger \rho_L^{\Sigma'} \tilde{c}_{1,L} + \rho_L^{\Sigma'}\right)\end{aligned}$$

$$\tilde{c}_{1,R}|\Sigma'\rangle = \rho_L^{\Sigma'}\left(\tilde{c}_{1,L}^\dagger \rho_L^{\Sigma'} \tilde{c}_{1,L}\right)\mathcal{S}_{\text{VN}}\left(\rho_L^\Sigma\right) = \mathcal{S}_{\text{VN}}\left(\rho_L^{\Sigma'}\right) + \log 2$$

$$|\Omega\rangle \longrightarrow |00 \dots 0\rangle$$
$$c_\ell \longrightarrow \mathcal{W}_1 \otimes \dots \otimes \mathcal{W}_{\ell-1} \otimes \sigma_\ell^- \otimes \mathbb{1}_\ell \otimes \dots \otimes \mathbb{1}_L,$$

$$B^{[\ell]_1^1} = \mathcal{W}$$

$$\sum_\ell \phi_\alpha(\ell)[\mathcal{W}_1 \otimes \dots \otimes \mathcal{W}_{\ell-1} \otimes \sigma_\ell^- \otimes \mathbb{1}_{\ell+1} \otimes \mathbb{1}_L] \longrightarrow \sum_\ell \phi_\alpha(\ell) a_\ell^\dagger = \tilde{a}_\alpha^\dagger$$

$$A_0^{[\ell]} = \mathbb{1}_{2^N\times 2^N}$$

$$A_1^{[\ell]} = \sum_{\alpha=1}^{N} \phi_\alpha(\ell)\left(\mathcal{W}^{\otimes N-\alpha} \otimes \sigma^- \otimes \mathbb{1}_{2\times 2}^{\otimes \alpha-1}\right)$$

$$\Theta_{2+2} = \alpha\tilde{c}_1^\dagger\tilde{c}_2^\dagger + \beta\tilde{c}_3^\dagger\tilde{c}_4^\dagger$$

$$B^{[\ell,2+2]}{}_j^i = \sum_k \begin{pmatrix} B^{[\ell,1]}{}_k^i \otimes B^{[\ell,2]}j & 0 \\ 0 & B^{[\ell,3]}{}_k^i \otimes B^{[\ell,4]}{}_j^k \end{pmatrix},$$

$$|\, b_L) = \begin{pmatrix} \alpha \\ 0 \\ 0 \\ 0 \\ \beta \\ 0 \\ 0 \\ 0 \end{pmatrix} = \alpha\begin{pmatrix} 1 \\ 0 \\ 0 \\ 0 \end{pmatrix} \oplus \beta\begin{pmatrix} 1 \\ 0 \\ 0 \\ 0 \end{pmatrix} = \begin{pmatrix} \alpha \\ \beta \end{pmatrix} \otimes \begin{pmatrix} 1 \\ 0 \\ 0 \\ 0 \end{pmatrix}$$

$$B^{[\ell,2+2]_0^0=\mathbb{1}_{6\times 6}},\ B^{[\ell,2+2]_0^1} = 0,$$

$$B^{[\ell,2+2]_1^0} = \begin{pmatrix} 0 & 0 & 0 & 0 & 0 & 0 \\ -\alpha\phi_1(\ell) & 0 & 0 & 0 & 0 & 0 \\ -\beta\phi_3(\ell) & 0 & 0 & 0 & 0 & 0 \\ \beta\phi_4(\ell) & 0 & 0 & 0 & 0 & 0 \\ \alpha\phi_2(\ell) & 0 & 0 & 0 & 0 & 0 \\ 0 & \phi_2(\ell) & \phi_4(\ell) & \phi_3(\ell) & \phi_1(\ell) & 0 \end{pmatrix}$$

$$B^{[\ell,2+2]}1_1^1 = \begin{pmatrix} 1 & 0 & 0 & 0 & 0 & 0 \\ 0 & -1 & 0 & 0 & 0 & 0 \\ 0 & 0 & -1 & 0 & 0 & 0 \\ 0 & 0 & 0 & -1 & 0 & 0 \\ 0 & 0 & 0 & 0 & -1 & 0 \\ 0 & 0 & 0 & 0 & 0 & 1 \end{pmatrix}$$

$$\sum_{\ell_1<\ell_2} \left\{\alpha\left(\phi_1(\ell_1)\phi_2(\ell_2) - \phi_2(\ell_2)\phi_1(\ell_1)\right) + \beta\left(\phi_3(\ell_1)\phi_4(\ell_2) - \phi_4(\ell_2)\phi_3(\ell_1)\right)\right\} c_{\ell_1}^\dagger c_{\ell_2}^\dagger.$$

$$|\Psi_1(A)\rangle := \prod_{l=1}^{d} \sum_{\mu=1}^{N} A_{\mu l}\hat{a}_\mu^\dagger|\mathrm{vac}\rangle,$$

$$|\Psi_1(A)\rangle = \exp\left[\sum_{\mu,\nu=1}^{N} \kappa_{\mu\nu}\hat{a}_\mu^\dagger\hat{a}_\nu\right]\prod_{r=1}^{d} a_r^\dagger|\mathrm{vac}\rangle,$$

$$|\Psi_1(A)\rangle := \prod_{l=1}^{d} \sum_{\mu=1}^{N} A_{\mu l}\hat{p}_\mu|\mathrm{vac}\rangle$$

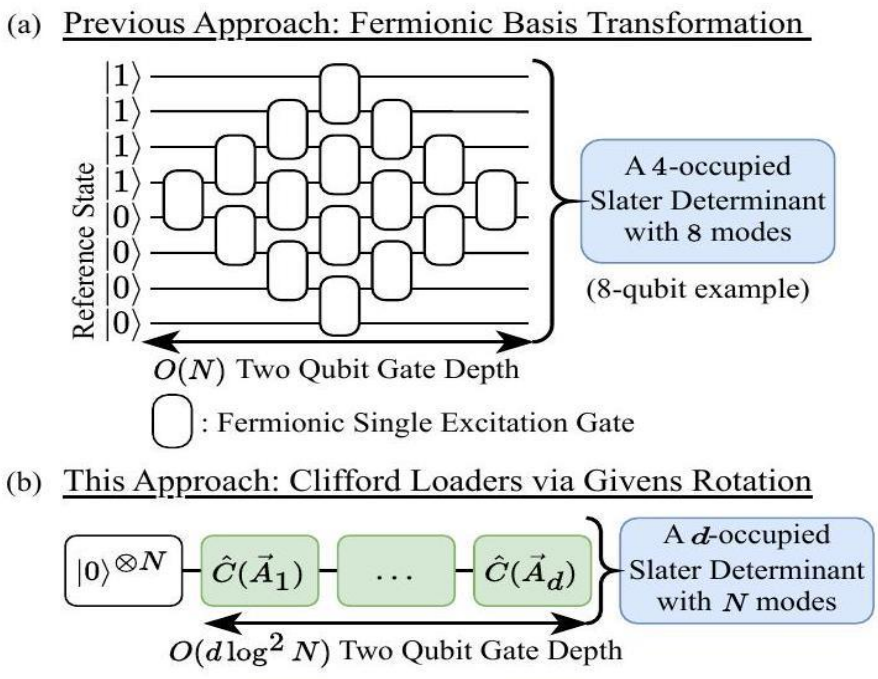

$$\hat{p}_\mu = \hat{a}_\mu^\dagger + \hat{a}_\mu$$

$$\hat{C}(\vec{A}_l) = \sum_{\mu=1}^{N} A_{\mu l}\hat{p}_\mu$$

$$|\Psi_1(A)\rangle = \prod_{l=1}^{d} \hat{C}(\vec{A}_l)|\text{vac}\rangle$$

$$|\Psi_1(A)\rangle = \sum_{|B|=d} \det(A_B)|B\rangle$$

$$\hat{C}(\vec{A}_l) = \hat{D}(\vec{A}_l)\hat{p}_1\hat{D}^\dagger(\vec{A}_l),$$

$$\hat{D}^\dagger(\vec{A}_l) = \prod_{s=1}^{\lceil \log_2 N \rceil} \left[\prod_{\mu,\nu\in\mathfrak{I}_s} \hat{U}_{\mu\nu}\left(\theta_{\mu\nu}^{(sl)}\right) \right]$$

$$\hat{U}_{\mu\nu}(\theta) = \exp\left[\theta\hat{p}_\mu\hat{p}_\nu\right]$$

$$\hat{U}_{\mu\nu}(\theta)\hat{p}_r\hat{U}_{\mu\nu}^\dagger(\theta) = \begin{cases} \cos(2\theta)\hat{p}_r + \sin(2\theta)\hat{p}_\nu & r = \mu \\ \cos(2\theta)\hat{p}_r - \sin(2\theta)\hat{p}_\mu & r = \nu \\ \hat{p}_r & r \neq \mu,\nu \end{cases}$$

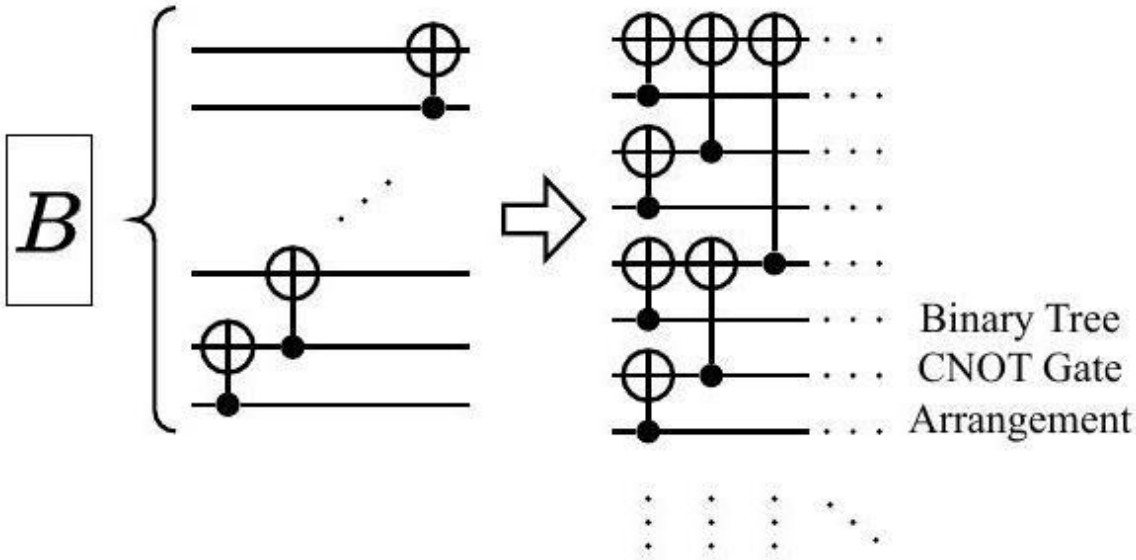

$$\hat{p}_\mu^{(L)} = \bigotimes_{r=L(\mathrm{mod}L)}^{L(\mu-1)} \hat{Z}_r \bigotimes_{r'=L(\mu-1)+1}^{\mu L} \hat{X}_{r'},$$

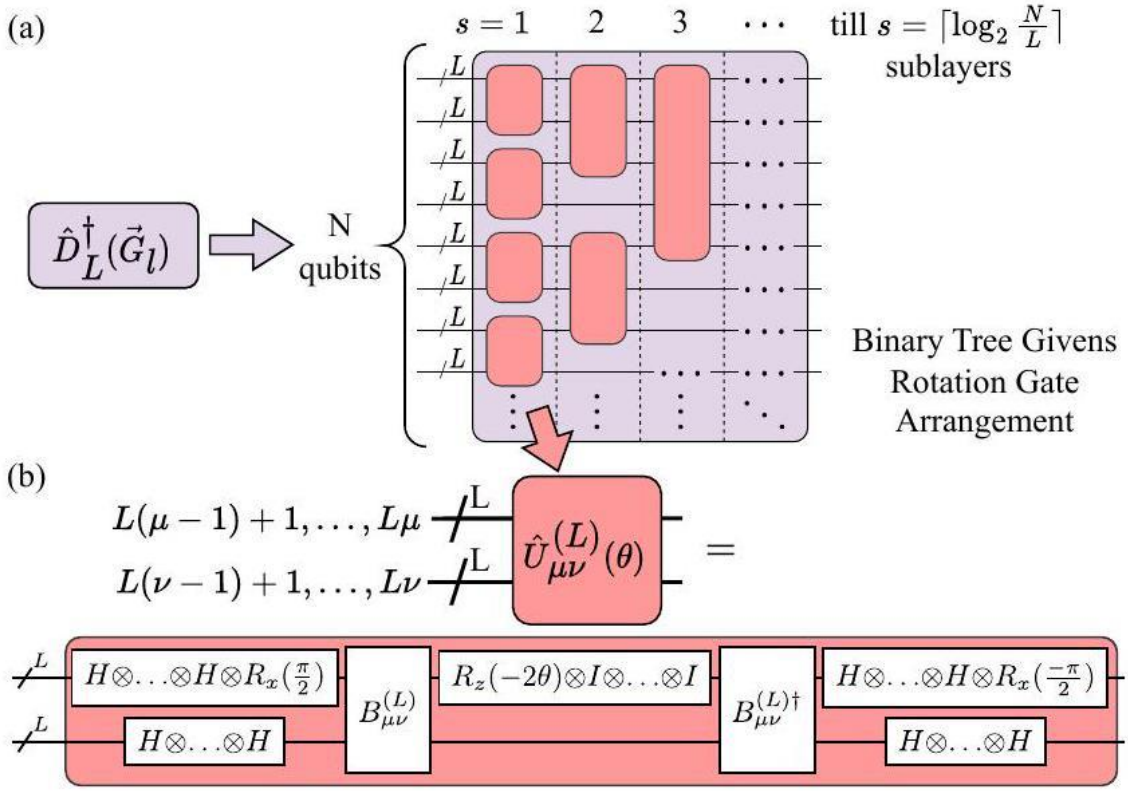

$$|\Psi_L(G)\rangle = \prod_{l=1}^{\frac{d}{L}} \hat{C}_L(\vec{G}_l)|\text{vac}\rangle,$$

$$|\Psi_L(G)\rangle \simeq \sum_{|B'|=\frac{d}{L}} \det(G_{B'})|B'_L\rangle,$$

$$\hat{C}_L(\vec{G}_l) = \hat{D}_L^\dagger(\vec{G}_l)\hat{p}_1^{(L)}\hat{D}_L(\vec{G}_l)$$

$$\hat{p}_1^{(L)} = \bigotimes_{r=1}^{L} \hat{X}_r\hat{U}_{\mu\nu}^{(L)}(\theta) = \exp\left[\theta\hat{p}_\mu^{(L)}\hat{p}_\nu^{(L)}\right]$$

$$|\Psi_L\rangle\frac{2d}{L}\left(\left\lceil\log_2^2\frac{N}{L}\right\rceil + (1+2\log_2 L)\left\lceil\log_2\frac{N}{L}\right\rceil\right) \approx \mathcal{O}\left(\frac{d}{L}\log_2^2\frac{N}{L}\right)$$

$$|\Psi_1(A)\rangle = \prod_{l=1}^{d}\sum_{k=1}^{N} A_{lk}\hat{a}_k^\dagger|\text{vac}\rangle$$

$$|\Psi_1(A)\rangle = \left(\sum_{k_d=1}^{N} A_{dk_d}\hat{a}_{k_d}^\dagger\right)\ldots\left(\sum_{k_1=1}^{N} A_{1k_1}\hat{a}_{k_1}^\dagger\right)|\text{vac}\rangle$$

$$= \sum_{k_d,\ldots,k_1=1}^{N} A_{dk_d}\ldots A_{1k_1}\hat{a}_{k_d}^\dagger\ldots\hat{a}_{k_1}^\dagger|\text{vac}\rangle$$

$$\left|\Psi_{1,\mathrm{alt}}(A)\right\rangle = \prod_{l=1}^{d} \sum_{k=1}^{N} A_{lk}\left(\hat{a}_k^\dagger + \hat{a}_k\right)|\mathrm{vac}\rangle$$

$$\left|\Psi_{1,\mathrm{alt}}(A)\right\rangle = \left(\sum_{k_d=1}^{N} A_{dk_d}\left(\hat{a}_{k_d}^\dagger + \hat{a}_{k_d}\right)\right) \ldots \left(\sum_{k_1=1}^{N} A_{1k_1}\left(\hat{a}_{k_1}^\dagger + \hat{a}_{k_1}\right)\right)|\mathrm{vac}\rangle$$

$$\left(\sum_{k_2=1}^{N} A_{2k_2}\left(\hat{a}_{k_2}^\dagger + \hat{a}_{k_2}\right)\right)\left(\sum_{k_1=1}^{N} A_{1k_1}\left(\hat{a}_{k_1}^\dagger + \hat{a}_{k_1}\right)\right)$$

$$= \sum_{k_2,k_1=1}^{N} A_{2k_2}A_{1k_1}\left(\hat{a}_{k_2}^\dagger + \hat{a}_{k_2}\right)\left(\hat{a}_{k_1}^\dagger + \hat{a}_{k_1}\right)$$

$$= \sum_{k_2,k_1=1}^{N} A_{2k_2}A_{1k_1}\left(\hat{a}_{k_2}^\dagger\hat{a}_{k_1}^\dagger + \hat{a}_{k_2}^\dagger\hat{a}_{k_1} + \hat{a}_{k_2}\hat{a}_{k_1}^\dagger + \hat{a}_{k_2}\hat{a}_{k_1}\right)$$

$$= \sum_{k_2,k_1=1}^{N} A_{2k_2}A_{1k_1}\left(\hat{a}_{k_2}^\dagger\hat{a}_{k_1}^\dagger + \delta_{k_2k_1}\mathbf{I} + \hat{a}_{k_2}\hat{a}_{k_1}\right)$$

$$= \sum_{k_2,k_1=1}^{N} A_{2k_2}A_{1k_1}\left(\hat{a}_{k_2}^\dagger\hat{a}_{k_1}^\dagger + \hat{a}_{k_2}\hat{a}_{k_1}\right)$$

$$\left|\Psi_{1,\mathrm{alt}}(A)\right\rangle = \left(\sum_{k_d=1}^{N} A_{dk_d}\left(\hat{a}_{k_d}^\dagger + \hat{a}_{k_d}\right)\right) \ldots \left(\sum_{k_2,k_1=1}^{N} A_{2k_2}A_{1k_1}\hat{a}_{k_2}^\dagger\hat{a}_{k_1}^\dagger\right)|\mathrm{vac}\rangle.$$

$$\left|\Psi_{1,\mathrm{alt}}(A)\right\rangle = \left(\sum_{k_d,k_{d-1}=1}^{N} A_{dk_d}A_{d-1k_{d-1}}\hat{a}_{k_d}^\dagger\hat{a}_{k_{d-1}}^\dagger\right) \ldots \left(\sum_{k_2,k_1=1}^{N} A_{2k_1}A_{1k_1}\hat{a}_{k_2}^\dagger\hat{a}_{k_1}^\dagger\right)|\mathrm{vac}\rangle$$

$$= \sum_{k_d,\ldots,k_1=1}^{N} A_{dk_d} \ldots A_{1k_1}\hat{a}_{k_d}^\dagger \ldots \hat{a}_{k_1}^\dagger|\mathrm{vac}\rangle$$

$$
\begin{aligned}
&\left|\Psi_{1,\mathrm{alt}}(A)\right\rangle \\
&= \left(\sum_{k_d=1}^{N} A_{dk_d}\left(\hat{a}_{k_d}^{\dagger}+\hat{a}_{k_d}\right)\right) \sum_{k_{d-1},\ldots,k_1=1}^{N} A_{d-1k_{d-1}} \ldots A_{1k_1} \hat{a}_{k_{d-1}}^{\dagger} \ldots \hat{a}_{k_1}^{\dagger}|\mathrm{vac}\rangle \\
&= \sum_{k_d,\ldots,k_1=1}^{N} A_{dk_d} \ldots A_{1k_1}\left(\hat{a}_{k_d}^{\dagger}\hat{a}_{k_{d-1}}^{\dagger} \ldots \hat{a}_{k_1}^{\dagger}+\hat{a}_{k_d}\hat{a}_{k_{d-1}}^{\dagger} \ldots \hat{a}_{k_1}^{\dagger}\right)|\mathrm{vac}\rangle \\
&= \sum_{k_d,\ldots,k_1=1}^{N} A_{dk_d} \ldots A_{1k_1}\left(\hat{a}_{k_d}^{\dagger}\hat{a}_{k_{d-1}}^{\dagger} \ldots \hat{a}_{k_1}^{\dagger}+\overset{\delta_{k_dk_d}\hat{a}_{k_{d-2}}^{\dagger}\ldots\hat{a}_{k_1}^{\dagger}-\hat{a}_{k_{d-1}}^{\dagger}\hat{a}_{k_d}\hat{a}_{k_{d-2}}^{\dagger}\ldots\hat{a}_{k_1}^{\dagger}}{\rightarrow}\right)|\mathrm{vac}\rangle \\
&= \sum_{k_d,\ldots,k_1=1}^{N} A_{dk_d} \ldots A_{1k_1}\left(\hat{a}_{k_d}^{\dagger}\hat{a}_{k_{d-1}}^{\dagger} \ldots \hat{a}_{k_1}^{\dagger}\underline{\hat{a}_{k_{d-1}}^{\dagger}\delta_{k_dk_{d-2}}\hat{a}_{k_{d-3}}^{\dagger} \ldots \hat{a}_{k_1}^{\dagger}}+\hat{a}_{k_{d-1}}^{\dagger}\hat{a}_{k_{d-2}}^{\dagger}\hat{a}_{k_d}\hat{a}_{k_{d-3}}^{\dagger} \ldots \hat{a}_{k_1}^{\dagger}\right. \\
&= \sum_{k_d,\ldots,k_1=1}^{N} A_{dk_d} \ldots A_{1k_1} \hat{a}_{k_d}^{\dagger} \ldots \hat{a}_{k_1}^{\dagger}|\mathrm{vac}\rangle
\end{aligned}
$$

$$
\begin{aligned}
\{\hat{p}_i,\hat{p}_j\} &= \{\hat{a}_i^{\dagger}+\hat{a}_i,\hat{a}_j^{\dagger}+\hat{a}_j\} \\
&= \left(\hat{a}_i^{\dagger}+\hat{a}_i\right)\left(\hat{a}_j^{\dagger}+\hat{a}_j\right)+\left(\hat{a}_j^{\dagger}+\hat{a}_j\right)\left(\hat{a}_i^{\dagger}+\hat{a}_i\right) \\
&= \hat{a}_i^{\dagger}\hat{a}_j^{\dagger}+\hat{a}_i\hat{a}_j^{\dagger}+\hat{a}_i^{\dagger}\hat{a}_j+\hat{a}_i\hat{a}_j+\hat{a}_j^{\dagger}a_i^{\dagger}+\hat{a}_j\hat{a}_i^{\dagger}+\hat{a}_j^{\dagger}\hat{a}_i+\hat{a}_j\hat{a}_i \\
&= \hat{a}_i\hat{a}_j^{\dagger}+\hat{a}_i^{\dagger}\hat{a}_j+\hat{a}_j\hat{a}_i^{\dagger}+\hat{a}_j^{\dagger}\hat{a}_i \\
&= 2\delta_{ij}I \text{ (shown)}
\end{aligned}
$$

$$
\hat{p}_{\mu}^{(L)} = \bigotimes_{r=L(\mathrm{mod}L)}^{L(\mu-1)} \hat{Z}_r \bigotimes_{r'=L(\mu-1)+1}^{\mu L} \hat{X}_{r'}
$$

$$
\begin{aligned}
2\hat{p}_{\mu}^{(L)}\hat{p}_{\mu}^{(L)} &= 2\left(\bigotimes_{r=L(\mathrm{mod}L)}^{L(\mu-1)} \hat{Z}_r \bigotimes_{r'=L(\mu-1)+1}^{\mu L} \hat{X}_{r'}\right)\left(\bigotimes_{s=L(\mathrm{mod}L)}^{L(\mu-1)} \hat{Z}_s \bigotimes_{s'=L(\mu-1)+1}^{\mu L} \hat{X}_{s'}\right) \\
&= 2\mathbf{I}(\text{ shown })
\end{aligned}
$$

$$
\begin{aligned}
\hat{p}_{\mu}^{(L)}\hat{p}_{\nu}^{(L)} &= \left(\bigotimes_{r=L(\mathrm{mod}L)}^{L(\mu-1)} \hat{Z}_r \bigotimes_{r'=L(\mu-1)+1}^{\mu L} \hat{X}_{r'}\right)\left(\bigotimes_{s=L(\mathrm{mod}L)}^{L(\nu-1)} \hat{Z}_s \bigotimes_{s'=L(\nu-1)+1}^{\nu L} \hat{X}_{s'}\right) \\
&= -i\left[\bigotimes_{r=(\mu-1)L+1}^{\mu L-1} \hat{X}_r\hat{Y}_{\mu L} \bigotimes_{r'=(\mu+1)L(\mathrm{mod}L)}^{(\nu-1)L} \hat{Z}_{r'} \bigotimes_{r''=(\nu-1)L+1}^{\nu L} \hat{X}_{r''}\right]
\end{aligned}
$$

$$
\begin{aligned}
\left\{\hat{p}_{\mu}^{(L)},\hat{p}_{\nu}^{(L)}\right\} &= \hat{p}_{\mu}^{(L)}\hat{p}_{\nu}^{(L)}+\hat{p}_{\nu}^{(L)}\hat{p}_{\mu}^{(L)} \\
&= -i\left[\bigotimes_{r=(\mu-1)L+1}^{\mu L-1} \hat{X}_r\hat{Y}_{\mu L} \bigotimes_{r'=(\mu+1)L(\mathrm{mod}L)}^{(\nu-1)L} \hat{Z}_{r'} \bigotimes_{r''=(\nu-1)L+1}^{\nu L} \hat{X}_{r''}\right] \\
&\quad +i\left[\bigotimes_{s=(\mu-1)L+1}^{\mu L-1} \hat{X}_s\hat{Y}_{\mu L} \bigotimes_{s'=(\mu+1)L(\mathrm{mod}L)}^{(\nu-1)L} \hat{Z}_{s'} \bigotimes_{s''=(\nu-1)L+1}^{\nu L} \hat{X}_{s''}\right] \\
&= 0 \text{ (shown)}
\end{aligned}
$$

$$|\Psi_1(A)\rangle = \prod_{l=1}^{d} \hat{C}(\vec{A}_l)|\text{vac}\rangle$$

$$\hat{C}(\vec{x}) = \sum_{\mu=1}^{N} x_\mu \hat{p}_\mu$$

$$\hat{C}(\vec{x})\hat{C}(\vec{y}) = \hat{C}(\vec{x}) \cdot \hat{C}(\vec{y}) + \hat{C}(\vec{x}) \wedge \hat{C}(\vec{y})$$

$$\hat{C}(\vec{x})\hat{C}(\vec{y}) = \sum_{r=1}^{N} x_r y_r (\hat{p}_r \cdot \hat{p}_r) + \sum_{\mu,\nu=1}^{N} x_\mu y_\nu (\hat{p}_\mu \wedge \hat{p}_\nu)$$

$$\prod_{l=1}^{d} \hat{C}(\vec{A}_l) = \sum_{\mu,\nu,\ldots,r=1}^{N} A_{\mu 1} A_{\nu 2} \ldots A_{rd} \underbrace{(\hat{p}_\mu \wedge \hat{p}_\nu \wedge \ldots \wedge \hat{p}_r)}_{d \text{ operators}}$$

$$\hat{p}_\mu \wedge \hat{p}_\mu = 0$$

$$\hat{p}_{\sigma_1} \wedge \hat{p}_{\sigma_2} \wedge \ldots \wedge \hat{p}_{\sigma_d} = \text{sgn}(\sigma) \hat{p}_{B_1} \wedge \hat{p}_{B_2} \wedge \ldots \wedge \hat{p}_{B_d}$$

$$\prod_{l=1}^{d} \hat{C}(\vec{A}_l) = \sum_{|B|=d} \sum_{\sigma \in B} \text{sgn}(\sigma) A_{\sigma_1 1} A_{\sigma_2 2} \ldots A_{\sigma_d d} (\hat{p}_{B_1} \wedge \hat{p}_{B_2} \wedge \ldots \wedge \hat{p}_{B_d})$$

$$\det(A_B) = \sum_{\sigma \in B} \text{sgn}(\sigma) A_{\sigma_1 1} A_{\sigma_2 2} \ldots A_{\sigma_d d}$$

$$\prod_{l=1}^{d} \hat{C}(\vec{A}_l) = \sum_{|B|=d} \det(A_B) \hat{p}_{B_1} \wedge \hat{p}_{B_2} \wedge \ldots \wedge \hat{p}_{B_d}$$

$$\hat{p}_\mu = \hat{a}_\mu^\dagger + \hat{a}_\mu$$

$$\prod_{l=1}^{d} \hat{C}(\vec{A}_l)|\text{vac}\rangle = \sum_{|B|=d} \det(A_B)|B\rangle$$

$$\hat{p}_\mu^{(L)} = \bigotimes_{r=L(\text{mod}L)}^{L(\mu-1)} \hat{Z}_r \bigotimes_{r'=L(\mu-1)+1}^{\mu L} \hat{X}_{r'}$$

$$\hat{p}_\mu^{(L)} = \begin{cases} \bigotimes_{r=L\text{mod}L)}^{L(\mu-1)} (\mathbf{I} - 2\hat{a}_r^\dagger \hat{a}_r) \bigotimes_{r'=L(\mu-1)+1}^{\mu L} (\hat{a}_r^\dagger + (-1)^{r'} \hat{a}_r) & \text{if } L \text{ is even ,} \\ - \bigotimes_{r=1\backslash(\text{mod}L)}^{L(\mu-1)-1} (\mathbf{I} - 2\hat{a}_r^\dagger \hat{a}_r) \bigotimes_{r'=L(\mu-1)+1}^{\mu L} (\hat{a}_r^\dagger + (-1)^{r'-L(\mu-1)-1} \hat{a}_r) & \text{if } L \text{ is odd ,} \end{cases}$$

$$\prod_{l=1}^{\frac{d}{L}} \hat{C}_L(\vec{G}_l)|\text{vac}\rangle \simeq \sum_{|B'|=\frac{d}{L}} \det(G_{B'})|B'_L\rangle,$$

$$\hat{U}_{\mu\nu}^{(L)}(\theta) = \exp\left[\theta \hat{p}_\mu^{(L)} \hat{p}_\nu^{(L)}\right]$$

$$\hat{U}_{\mu\nu}^{(L)}(\theta) = \exp\left[-i\theta \bigotimes_{r=L(\mu-1)+1}^{\mu L-1} \hat{X}_r \hat{Y}_{\mu L} \bigotimes_{r'=L(\nu-1)+1}^{\nu L} \hat{X}_{r'} \bigotimes_{\substack{r''=L(\mu+1) \\ (\text{mod} L)}}^{L(\nu-1)} \hat{Z}_{r''}\right]$$

$$\hat{U}_{\mu\nu}^{(2)}(\theta) = \exp\left[-i\theta \hat{X}_{2\mu-1} \hat{Y}_{2\mu} \hat{X}_{2\nu-1} \hat{X}_{2\nu} \hat{Z}_{2(\mu+1)} \hat{Z}_{2(\mu+2)} \dots \hat{Z}_{2(\nu-1)}\right]$$

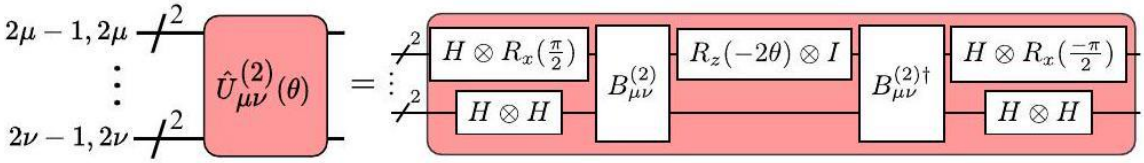

$$\begin{aligned}
&\frac{2d}{L} \sum_{s=1}^{\lceil \log_2 \frac{N}{L} \rceil} 2\lceil \log_2 (2L + 2^s - 1 - 1)\rceil \\
&\leq \frac{4d}{L} \sum_{s=1}^{\lceil \log_2 \frac{N}{L} \rceil} \log_2 \left(2^{s+\log_2 (L)}\right) \\
&= \frac{4d}{L} \sum_{s=1}^{\lceil \log_2 \frac{N}{L} \rceil} (s + \log_2 (L)) \\
&= \frac{2d}{L}\left(\left\lceil \log_2^2 \frac{N}{L} \right\rceil + (1 + 2\log_2 L)\left\lceil \log_2 \frac{N}{L} \right\rceil\right)
\end{aligned}$$

$$|\bar{\Phi}\rangle = \sum_{I=1}^{N_D} \hat{\Phi}^{(I\uparrow)} \hat{\Phi}^{(I\downarrow)} |0\rangle,$$

$$\hat{\Phi}^{(I,\sigma)} = \prod_{i=1}^{n_\sigma} \left(\sum_{\mu=1}^{m} \phi_{i,\mu}^{(I,\sigma)} \hat{c}_{\mu,\sigma}^\dagger\right),$$

$$|\bar{\Phi}\rangle = \sum_{I=1}^{N_D} \left|\Phi^{(I)}\right\rangle$$

$$\left|\Phi^{(I)}\right\rangle = \left(\sum_{\mu_1=1}^{m} \phi_{1,\mu_1}^{(I)} \hat{c}_{\mu_1}^\dagger\right) \dots \left(\sum_{\mu_n=1}^{m} \phi_{n,\mu_n}^{(I)} \hat{c}_{\mu_n}^\dagger\right)|0\rangle.$$

$$\left|\Phi^{(I)}\right\rangle = \sum_{\mu_1=1}^{m} \phi_{1,\mu_1}^{(I)} \hat{c}_{\mu_1}^{\dagger} \left|\Phi_{1+}^{(I)}\right\rangle$$

$$\left|\Phi_{1+}^{(I)}\right\rangle := \left(\sum_{\mu_2} \phi_{2,\mu_2}^{(I)} \hat{c}_{\mu_2}^{\dagger}\right) \cdots \left(\sum_{\mu_n} \phi_{n,\mu_n}^{(I)} \hat{c}_{\mu_n}^{\dagger}\right) |0\rangle$$

$$|\bar{\Phi}\rangle = \sum_{I=1}^{N_D} \sum_{\mu_1=1}^{m} \phi_{1,\mu_1}^{(I)} \hat{c}_{\mu_1}^{\dagger} \left|\Phi_{1+}^{(I)}\right\rangle$$

$$E = \frac{\langle \bar{\Phi} | \hat{H} | \bar{\Phi} \rangle}{\langle \bar{\Phi} \mid \bar{\Phi} \rangle} = \frac{v^{\dagger} \mathcal{H} v}{v^{\dagger} \mathcal{S} v},$$

$$v_{I\mu} := \phi_{1,\mu}^{(I)}$$

$$\mathcal{H}_{I\mu,J\nu} = \left\langle \Phi_{1+}^{(I)} \middle| \hat{c}_{\mu} \hat{H} \hat{c}_{\nu}^{\dagger} \middle| \Phi_{1+}^{(J)} \right\rangle$$
$$\mathcal{S}_{I\mu,J\nu} = \left\langle \Phi_{1+}^{(I)} \middle| \hat{c}_{\mu} \hat{c}_{\nu}^{\dagger} \middle| \Phi_{1+}^{(J)} \right\rangle$$

$$\left\langle \Phi_{1+}^{(I)} \middle| \hat{c}_{\mu} \hat{H} \hat{c}_{\nu}^{\dagger} \middle| \Phi_{1+}^{(J)} \right\rangle \left\langle \Phi_{1+}^{(I)} \mid \Phi_{1+}^{(J)} \right\rangle = 0$$

$$\phi_i^{(I)} \mapsto \sum_{j=1}^{n} U_{i,j}^{(I)} \phi_j^{(I)}$$

$$\langle \Phi \mid \Psi \rangle = \det[A]$$

$$A_{ij} = \phi_i^{\dagger} \psi_j = \sum_{\mu} \phi_{i,\mu}^{\star} \psi_{j,\mu}$$

$$\hat{W} = \sum_{\substack{\xi_1 \dots \xi_K \\ \zeta_1 \dots \zeta_K}} w_{\xi_1 \dots \zeta_K}^{\zeta_1 \dots \zeta_K} \hat{c}_{\zeta_K}^{\dagger} \dots c_{\zeta_1}^{\dagger} \hat{c}_{\xi_1} \dots \hat{c}_{\xi_K}$$

$$\langle \Phi | \hat{W} | \Psi \rangle = \sum_{\substack{\xi_1 \dots \xi_K \\ \zeta_1 \dots \zeta_K}} w_{\xi_1 \dots \xi_K}^{\zeta_1 \dots \zeta_K} \rho_{\xi_1 \dots \xi_K}^{\zeta_1 \dots \zeta_K}$$

$$\rho_{\xi_1 \dots \xi_K}^{\zeta_1 \dots \zeta_K} := \langle \Phi | \hat{c}_{\zeta_K}^{\dagger} \dots \hat{c}_{\zeta_1}^{\dagger} \hat{c}_{\xi_1} \dots \hat{c}_{\xi_K} | \Psi \rangle$$

$$\rho_{\xi_1 \dots \xi_K}^{\zeta_1 \dots \zeta_K} = \det[A] \det \begin{bmatrix} B_{\zeta_1}^{\xi_1} & \cdots & B_{\zeta_1}^{\xi_K} \\ \vdots & \ddots & \vdots \\ B_{\zeta_K}^{\xi_1} & \cdots & B_{\zeta_K}^{\xi_K} \end{bmatrix}$$

$$B_{\zeta}^{\xi} = \sum_{i,j} \psi_{\xi,i}^{\star} (A^{-1})_{ij} \phi_{\zeta,j}$$

$$\frac{\langle\Phi|\hat{W}|\Psi\rangle}{\langle\Phi\mid\Psi\rangle}=\sum_{\sigma\in S_K}\operatorname{sgn}(\sigma)\sum_{\substack{\xi_1\ldots\xi_K\\ \zeta_1\ldots\zeta_K}} w_{\xi_1\ldots\xi_K}^{\zeta_1\ldots\zeta_K}\prod_{t=1}^{K} B_{\zeta_{\sigma[t]}}^{\xi_t},$$

$$\langle\Phi|\hat{W}|\Psi\rangle=\det[U]\det[V^H]\sum_{\sigma\in S_K}\operatorname{sgn}(\sigma)$$

$$\sum_{\substack{\xi_1\ldots\xi_K\\ \zeta_1\ldots\zeta_K}} w_{\xi_1\ldots\xi_K}^{\zeta_1\ldots\zeta_K}\sum_{k_1\ldots k_K} T_{k_1\ldots k_K}\prod_{t=1}^{K} X_{\xi_t,k_t}Y_{k_t,\zeta_{\sigma[t]}}$$

$$X_{\xi,k}=\sum_i \psi_{i,\xi}^{\star}V_{i,k}$$

$$Y_{k,\zeta}=\sum_j U_{j,k}^{\star}\phi_{j,\zeta}$$

$$T_{k_1\ldots k_K}=\prod_{i\in\{1,\ldots n\}\setminus\{k_1,\ldots,k_K\}}\Lambda_i$$

$$\frac{\langle\Phi|\hat{c}_\mu\hat{W}\hat{c}_\nu^\dagger|\Psi\rangle}{\langle\Phi\mid\Psi\rangle}=$$

$$-\sum_{\sigma\in S_{K+1}}\operatorname{sgn}(\sigma)w_{\xi_1\ldots\xi_K}^{\zeta_1\ldots\zeta_K}\prod_{t=1}^{K+1} B_{\zeta_{\sigma[t]}}^{\xi_t}$$

$$+\delta_{\mu,\nu}\sum_{\sigma\in S_K}\operatorname{sgn}(\sigma)w_{\xi_1\ldots\xi_K}^{\zeta_1\ldots\zeta_K}\prod_{t=1}^{K} B_{\zeta_{\sigma[t]}}^{\xi_t}$$

$$-\sum_{\substack{\sigma\in S_{K-1}\\ u\in\{1,\ldots,K\}}}\operatorname{sgn}(\sigma)w_{\xi_1\ldots\xi_K}^{\zeta_1\ldots\zeta_{u-1}\mu\zeta_{u+1}\ldots\zeta_K}\prod_{t=1}^{K} B_{\zeta_{\sigma[t]}}^{\xi_t}$$

$$-\sum_{\substack{\sigma\in S_{K-1}\\ v\in\{1,\ldots,K\}}}\operatorname{sgn}(\sigma)w_{\xi_1\ldots\xi_{v-1}\nu\xi_{v+1}\ldots\xi_K}^{\zeta_1\ldots\zeta_K}\prod_{t=1}^{K} B_{\zeta_{\sigma[t]}}^{\xi_t}$$

$$+\sum_{\substack{\sigma\in S_{K-1}\\ u,v\in\{1,\ldots,K\}}}\operatorname{sgn}(\sigma)(-1)^{u+v}w_{\xi_1\ldots\xi_{v-1}\nu\xi_v\ldots\xi_{K-1}}^{\zeta_1\ldots\zeta_{u-1}\mu\zeta_u\ldots\zeta_{K-1}}\prod_{t=1}^{K-1} B_{\zeta_{\sigma[t]}}^{\xi_t}$$

$$\frac{\langle\Phi|\hat{c}_\mu\hat{c}_\nu^\dagger|\Psi\rangle}{\langle\Phi\mid\Psi\rangle}=-B_\nu^\mu+\delta_{\mu,\nu},$$

$$\hat{H}=\sum_{\substack{\mu\nu\\ \sigma}} h_{\mu\nu}\hat{c}_{i\sigma}^\dagger\hat{c}_{j\sigma}+\frac{1}{2}\sum_{\substack{\mu\nu\xi\zeta\\ \sigma\sigma'}} h_{\mu\nu\xi\zeta}\hat{c}_{\mu\sigma}^\dagger\hat{c}_{\xi\sigma'}^\dagger\hat{c}_{\zeta\sigma'}\hat{c}_{\nu\sigma}+E_{\text{nuc}}$$

$$\hat{S}^2=\frac{1}{2}\left(n^\downarrow+n^\uparrow\right)+\frac{1}{4}\left(n^\downarrow-n^\uparrow\right)^2-\sum_{t,u=1}^{m}\hat{c}_{i\uparrow}^\dagger\hat{c}_{j\uparrow}\hat{c}_{j\downarrow}^\dagger\hat{c}_{i\downarrow}$$

$$\mathrm{Var} = \langle \hat{H}^2 \rangle - \langle \hat{H} \rangle^2.$$

$$\mathcal{H}_{I\mu,J\nu} = \sum_{\mu'\nu'} \phi_{1,\mu'}^{(I,\bar{\sigma}_I)\star} \phi_{1,\nu'}^{(J,\bar{\sigma}_J)} \langle 0 | \Phi_{1+}^{(I,\downarrow)\dagger} \Phi_{1+}^{(I,\uparrow)\dagger} \hat{c}_{\mu',\bar{\sigma}_I} \hat{c}_{\mu,\sigma_I} \hat{H} \hat{c}_{\nu,\sigma_J}^{\dagger} \hat{c}_{\nu',\bar{\sigma}_J}^{\dagger} \Phi_{1+}^{(J\uparrow)} \Phi_{1+}^{(J\downarrow)} | 0 \rangle$$

$$\det \begin{bmatrix} A & B \\ C & D \end{bmatrix} = \lim_{\varepsilon \to 0} \det[A + \varepsilon I] \det[D - C(A + \varepsilon I)^{-1} B]$$

$$\langle \Phi | \hat{c}_{\nu_K}^{\dagger} \dots c_{\nu_1}^{\dagger} \hat{c}_{\mu_1} \dots \hat{c}_{\mu_K} | \Psi \rangle = (-1)^K \det \begin{bmatrix} A & \phi_{\nu_1}^T & \dots & \phi_{\nu_K}^T \\ \psi_{\mu_1}^\star & 0 & \dots & 0 \\ \vdots & \vdots & \ddots & \vdots \\ \psi_{\mu_K}^\star & 0 & \dots & 0 \end{bmatrix}$$

$$\langle \Phi | \hat{c}_{\mu_1} \dots \hat{c}_{\mu_K} \hat{c}_{\nu_K}^{\dagger} \dots c_{\nu_1}^{\dagger} | \Psi \rangle = \det \begin{bmatrix} A & \phi_{\nu_1}^T & \dots & \phi_{\nu_K}^T \\ \psi_{\mu_1}^\star & \delta_{\mu_1\nu_1} & \dots & \delta_{\mu_1\nu_K} \\ \vdots & \vdots & \ddots & \vdots \\ \psi_{\mu_K}^\star & \delta_{\mu_K\nu_1} & \dots & \delta_{\mu_K\nu_K} \end{bmatrix}$$

$$\begin{aligned} \langle \Phi | \hat{c}_{\nu_1}^{\dagger} \hat{c}_{\mu_1} | \Psi \rangle &= \delta_{\mu_1\nu_1} \langle \Phi \mid \Psi \rangle - \langle \Phi | \hat{c}_{\mu_1} \hat{c}_{\nu_1}^{\dagger} | \Psi \rangle \\ &= \delta_{\mu_1\nu_1} \det[A] - \det \begin{bmatrix} A & \phi_{\nu_1}^T \\ \psi_{\mu_1}^\star & \delta_{\mu_1\nu_1} \end{bmatrix} \\ &= \delta_{\mu_1\nu_1} \det[A] - \lim_{\varepsilon \to 0} \det[A + \varepsilon I] \left(\delta_{\mu_1\nu_1} - \psi_{\mu_1}^\star (A + \varepsilon I)^{-1} \phi_{\nu_1}^T \right) \\ &= - \det \begin{bmatrix} A & \phi_{\nu_1}^T \\ \psi_{\mu_1}^\star & 0 \end{bmatrix} \end{aligned}$$

$$\begin{aligned} \langle \Phi | \hat{c}_{\nu_K}^{\dagger} \dots c_{\nu_1}^{\dagger} \hat{c}_{\mu_1} \dots \hat{c}_{\mu_K} | \Psi \rangle &= (-1)^K \det \begin{bmatrix} A & \phi_{\nu_1}^T & \dots & \phi_{\nu_K}^T \\ \psi_{\mu_1}^\star & 0 & \dots & 0 \\ \vdots & \vdots & \ddots & \vdots \\ \psi_{\mu_K}^\star & 0 & \dots & 0 \end{bmatrix} \\ &= \lim_{\varepsilon \to 0} \det[A + \varepsilon I] \det \left[[\psi_{\mu_t}^\star \quad \dots \quad \psi_{\mu_n}^\star]^T (A + \varepsilon I)^{-1} [\phi_{\nu_1}^T \quad \dots \quad \phi_{\nu_K}^T] \right] \\ &= \lim_{\varepsilon \to 0} \det[A + \varepsilon I] \sum_{\sigma \in S_K} \mathrm{sgn}(\sigma) \prod_{t=1}^{K} \left(\psi_{\mu_t}^\star (A + \varepsilon I)^{-1} \phi_{\nu_{\sigma[t]}}^T \right) \end{aligned}$$

$$\begin{aligned} &\langle \Phi | \hat{c}_{\mu_1} \dots \hat{c}_{\mu_K} \hat{c}_{\nu_K}^{\dagger} \dots c_{\nu_1}^{\dagger} | \Psi \rangle \\ &= \sum_{P=0}^{K} \sum_{(k_1,l_1) \neq \dots \neq (k_P l_P)} \langle \Phi | \left\{ \hat{c}_{\mu_1} \dots \hat{c}_{\mu_{k_i}} \dots c_{\mu_K} \hat{c}_{\nu_K}^{\dagger} \dots \hat{c}_{\nu_{l_i}}^{\dagger} \dots \hat{c}_{\nu_1}^{\dagger} \right\} | \Psi \rangle \\ &= \sum_{P=0}^{K} (-1)^{K-P} \sum_{\substack{|\Omega|=P \\ \Omega \subset \{1,\dots,K\}}} \sum_{\substack{|\Theta|=P \\ |\Theta \subset \{1,\dots,K\}}} \sum_{\sigma \in S_P} \mathrm{sgn}(\sigma) \left(\prod_{t=1}^{P} \delta_{\mu_{\Omega_t} \nu_{\Theta_{\sigma[t]}}} (-1)^{\Omega_t + \Theta_{\sigma[t]}} \right) \langle \Phi | \hat{c}_{\nu_{\Theta_{K-P}}}^{\dagger} \dots \hat{c}_{\nu_{\bar{\Theta}_1}}^{\dagger} \hat{c}_{\mu_{\bar{\Omega}_1}} \dots c_{\mu_{\bar{\Omega}_{K-P}}} | \Psi \rangle \\ &= (-1)^K \langle \Phi | \hat{c}_{\nu_K}^{\dagger} \dots \hat{c}_{\nu_1}^{\dagger} \hat{c}_{\mu_1} \dots c_{\mu_K} | \Psi \rangle \\ &+ \sum_{P=1}^{K} (-1)^{K-P} \sum_{\substack{|\Omega|=P \\ \Omega \subset \{1,\dots,K\}}} \sum_{\substack{|\Theta|=P \\ \Theta \subset \{1,\dots,K\}}} \sum_{\sigma \in S_P} \mathrm{sgn}(\sigma) \left(\prod_{t=1}^{P} \delta_{\mu_{\Omega_t} \nu_{\Theta_{\sigma[t]}}} (-1)^{\Omega_t + \Theta_{\sigma[t]}} \right) \langle \Phi | \hat{c}_{\nu_{\bar{\Theta}_{K-P}}}^{\dagger} \dots \hat{c}_{\nu_{\bar{\Theta}_1}}^{\dagger} \hat{c}_{\mu_{\bar{\Omega}_1}} \dots c_{\mu_{\bar{\Omega}_{K-P}}} | \Psi \rangle \end{aligned}$$

$$\langle\Phi|\hat{c}^{\dagger}_{\nu_K}\dots\hat{c}^{\dagger}_{\nu_1}\hat{c}_{\mu_1}\dots c_{\mu_K}|\Psi\rangle$$
$$=(-1)^K\langle\Phi|\hat{c}_{\mu_1}\dots\hat{c}_{\mu_K}\hat{c}^{\dagger}_{\nu_K}\dots c^{\dagger}_{\nu_1}|\Psi\rangle$$
$$-\sum_{P=1}^{K}(-1)^P\sum_{\substack{|\Omega|=P\\ \Omega\subset\{1,\dots,K\}}}\sum_{\substack{|\Theta|=P\\ \Theta\subset\{1,\dots,P\}}}\sum_{\sigma\in S_P}\operatorname{sgn}(\sigma)\left(\prod_{i=1}^{P}\delta_{\mu_{\Omega_t}\nu_{\Theta_{\sigma[t]}}}(-1)^{\Omega_t+\Theta_{\sigma[t]}}\right)\langle\Phi|\hat{c}^{\dagger}_{\nu_{\Theta_{P-K}}}\dots\hat{c}^{\dagger}_{\nu_{\bar{\Theta}_1}}\hat{c}_{\mu_{\bar{\Omega}_1}}\dots c_{\mu_{\bar{\Omega}_{P-K}}}|\Psi\rangle$$

$$\prod_{t=1}^{P}(-1)^{\Omega_t+\Theta_{\sigma[t]}}=(-1)^{\sum_{t=1}^{P}\Omega_t+\sum_{t=1}^{P}\Theta_t}$$

$$\langle\Phi|\hat{c}^{\dagger}_{\nu_P}\dots\hat{c}^{\dagger}_{\nu_1}\hat{c}_{\mu_1}\dots c_{\mu_P}|\Psi\rangle$$
$$=(-1)^P\langle\Phi|\hat{c}_{\mu_1}\dots\hat{c}_{\mu_P}\hat{c}^{\dagger}_{\nu_P}\dots c^{\dagger}_{\nu_1}|\Psi\rangle$$
$$-\sum_{P=1}^{K}\sum_{\substack{|\Omega|=P\\ \Omega\subset\{1,\dots,P\}}}\sum_{\substack{|\Theta|=P\\ \Theta\subset\{1,\dots,P\}}}(-1)^{\sum_{t=1}^{P}\Omega_t+\sum_{t=1}^{P}\Theta_t}\underbrace{(-1)\underbrace{\det}_{\blacksquare}\left[\psi^{\star}_{\mu_{\bar{\Omega}_t}}(A+\varepsilon I)^{-1}\phi^{T}_{\nu_{\bar{\Theta}_u}}\right]_{t,u=1}^{P-K}}_{=\det\left[-\delta_{\mu_{\Omega_t}\nu_{\Theta_u}}\right]_{t,u=1}^{P}\,(-1)^P\sum_{\sigma\in S_P}\operatorname{sgn}(\sigma)\left(\prod_{t=1}^{P}\delta_{\mu_{\Omega_t}\nu_{\Theta_{\sigma[t]}}}\right)}\underbrace{\langle\Phi|\hat{c}_{\bar{\Theta}_{P-K}}\dots\hat{c}^{\dagger}_{\bar{\Theta}_1}\hat{c}_{\mu_{\bar{\Omega}_1}}\dots c_{\mu_{\bar{\Omega}_{K-P}}}|\Psi\rangle}_{\lim_{\bar{\rho}_{\varepsilon\to0}}\det[A+\varepsilon I]}$$

$$\langle\Phi|\hat{c}^{\dagger}_{\nu_P}\dots\hat{c}^{\dagger}_{\nu_1}\hat{c}_{\mu_1}\dots c_{\mu_P}|\Psi\rangle$$
$$=(-1)^P\langle\Phi|\hat{c}_{\mu_1}\dots\hat{c}_{\mu_P}\hat{c}^{\dagger}_{\nu_P}\dots c^{\dagger}_{\nu_1}|\Psi\rangle$$

$$+\lim_{\varepsilon\to0}\det[A+\varepsilon I]\det\left[-\psi^{\star}_{\mu_t}(A+\varepsilon I)^{-1}\phi^{T}_{\nu_u}\right]_{t,u=1}^{P}$$
$$=\lim_{\varepsilon\to0}\det[A+\varepsilon I]\det\left[-\psi^{\star}_{\mu_t}(A+\varepsilon I)^{-1}\phi^{T}_{\nu_u}\right]_{t,u=1}^{P}\overset{(D1)}{=}(-1)^P\det\begin{bmatrix}A & \psi^{T}_{\nu_1} & \dots & \psi^{T}_{\nu_P}\\ \phi^{\star}_{\mu_1} & 0 & \dots & 0\\ \vdots & \vdots & \ddots & \vdots\\ \phi^{\star}_{\mu_n} & 0 & \dots & 0\end{bmatrix}$$

$$\langle\Phi|\hat{W}|\Psi\rangle=\lim_{\varepsilon\to0}\det[U]\det[S+\varepsilon I]\det[V^H]\sum_{\substack{\mu_1\dots\mu_K\\ \nu_1\dots b_K}}^{n_o}w^{\nu_1\dots\nu_K}_{\mu_1\dots\mu_K}\sum_{\substack{i_1\dots i_K\\ j_1\dots j_K\\ k_1\dots k_K}}^{n_e}\sum_{\sigma\in S_K}\operatorname{sgn}(\sigma)\prod_{t=1}^{K}\psi^{\star}_{\mu_t,i_t}V_{i_tk_t}\left(S_{k_t}+\varepsilon\right)^{-1}U^{\star}_{j_tk_t}\phi_{\nu_{\sigma[t]}j_t}$$

$$\delta^{\nu_1\dots\nu_K}_{\nu_1\dots i_K}=\sum_{\sigma\in S_K}\operatorname{sgn}(\sigma)\delta^{\nu_{\sigma[1]}}_{\nu_1}\dots\delta^{\nu_{\sigma[N]}}_{\nu_K}$$

$$\sum_{x_1\dots x_K}\delta^{x_1\dots x_K}_{y_1\dots y_K}A^{z_1}_{x_1}A^{z_2}_{x_2}\dots A^{z_K}_{x_K}=\sum_{x'_1\dots x'_K}\delta^{z_1\dots z_K}_{x'_1\dots x'_K}A^{x'_1}_{y_1}A^{x'_2}_{y_2}\dots A^{x'_K}_{z_K}$$

$$\lim_{\epsilon\to0}\left(\prod_{k=1}^{n}(\Lambda_k+\epsilon)\right)\delta^{j_1\dots j_K}_{i_1\dots i_K}\prod_{u=1}^{K}\left(\Lambda_{i_u}+\epsilon\right)^{-1}=\delta^{j_1\dots j_K}_{i_1\dots i_K}\underbrace{\prod_{\ell\in\{1,\dots n\}\setminus\{k_1,\dots,k_K\}}\Lambda_\ell}_{=:T_{k_1,k_2,\dots,k_K}}$$

$$\langle\Phi|\hat{W}|\Psi\rangle=\det[U]\det[V^H]\sum_{\substack{\mu_1\dots\mu_K\\ \nu_1\dots\nu_K}}^{n_o}w^{\nu_1\dots\nu_K}_{\mu_1\dots\mu_K}\sum_{\substack{i_1\dots i_K\\ j_1\dots j_K\\ k_1\dots k_K}}^{n_e}T_{k_1\dots k_K}\sum_{\sigma\in S_K}\operatorname{sgn}(\sigma)\prod_{t=1}^{P}\psi^{\star}_{i_t,\mu_t}V_{i_tk_t}U^{\star}_{k_tj_t}\phi_{j_t,\nu_{\sigma[t]}}$$

$$\frac{\langle\Phi|\hat{c}_\mu \hat{W} \hat{c}_\nu^\dagger|\Psi\rangle}{\det[U]\det[V^H]} =$$

$$-\sum_{\sigma\in S_{K+1}} \operatorname{sgn}(\sigma) w_{\xi_1\ldots\xi_K}^{\zeta_1\ldots\zeta_K} \sum_{k_1\ldots k_{K+1}} T_{k_1\ldots k_{K+1}} \prod_{t=1}^{K+1} \tilde{B}_{\xi_t,\zeta_{\sigma[t]},k_t}$$

$$+\delta_{\mu,\nu} \sum_{\sigma\in S_K} \operatorname{sgn}(\sigma) w_{\xi_1\ldots\xi_K}^{\zeta_1\ldots\zeta_K} \sum_{k_1\ldots k_K} T_{k_1\ldots k_K} \prod_{t=1}^{K} \tilde{B}_{\xi_t,\zeta_{\sigma[t]},k_t}$$

$$-\sum_{\substack{\sigma\in S_{K-1}\\ u\in\{1,\ldots,K\}}} \operatorname{sgn}(\sigma) w_{\xi_1\ldots\xi_K}^{\zeta_1\ldots\zeta_{u-1}\mu\zeta_{u+1}\ldots\zeta_K} \sum_{k_1\ldots k_K} T_{k_1\ldots k_K} \prod_{t=1}^{K} \tilde{B}_{\xi_t,\zeta_{\sigma[t]},k_t}$$

$$-\sum_{\substack{\sigma\in S_{K-1}\\ v\in\{1,\ldots,K\}}} \operatorname{sgn}(\sigma) w_{\xi_1\ldots\xi_{v-1}\nu\xi_{v+1}\ldots\xi_K}^{\zeta_1\ldots\zeta_K} \sum_{k_1\ldots k_K} T_{k_1\ldots k_K} \prod_{t=1}^{K} \tilde{B}_{\xi_t,\zeta_{\sigma[t]},k_t}$$

$$+\sum_{\substack{\sigma\in S_{K-1}\\ u,v\in\{1,\ldots,K\}}} \operatorname{sgn}(\sigma)(-1)^{u+v} w_{\xi_1\ldots\xi_{v-1}\nu\xi_v\ldots\xi_{K-1}}^{\zeta_1\ldots\zeta_{u-1}\mu\zeta_u\ldots\zeta_{K-1}} \sum_{k_1\ldots k_{K-1}} T_{k_1\ldots k_K} \prod_{t=1}^{K-1} \tilde{B}_{\xi_t,\zeta_{\sigma[t]},k_t}$$

$$\tilde{B}_{\xi,\zeta,k} := \sum_{i,j} \psi_{\xi,i}^\star V_{i,k}^\star U_{j,k} \phi_{\zeta,j}$$

$$H = \frac{1}{2m_e}(-\imath\hbar\boldsymbol{\nabla} + e\boldsymbol{A})^2$$

$$H = -\frac{\hbar^2}{2m_e}\nabla^2 + \frac{e^2B^2}{8m_e}(x^2+y^2) + \frac{eB}{2m_e}L_z,$$

$$\lambda_0 = \sqrt{\frac{\hbar}{m_e\omega_c}},$$

$$H = -\frac{1}{2}\left\{\frac{1}{r}\partial_r r\partial_r - \frac{L_z^2}{\hbar^2 r^2}\right\} + \frac{1}{8}r^2 + \frac{1}{2\hbar}L_z$$

$$\Psi_n^m(\boldsymbol{r}) = \sqrt{\frac{n!}{\Gamma(n+|m|+1)2^{|m|}}}\, e^{-r^2/4} L_n^{(|m|)}(r^2/2) r^{|m|} e^{\imath m\phi}$$

$$E^{(1)} = \frac{1}{2}(2n+m+|m|+1)$$

$$\epsilon = n + \frac{m+|m|}{2}$$

$$E^{(1)} = \epsilon + \frac{1}{2}$$

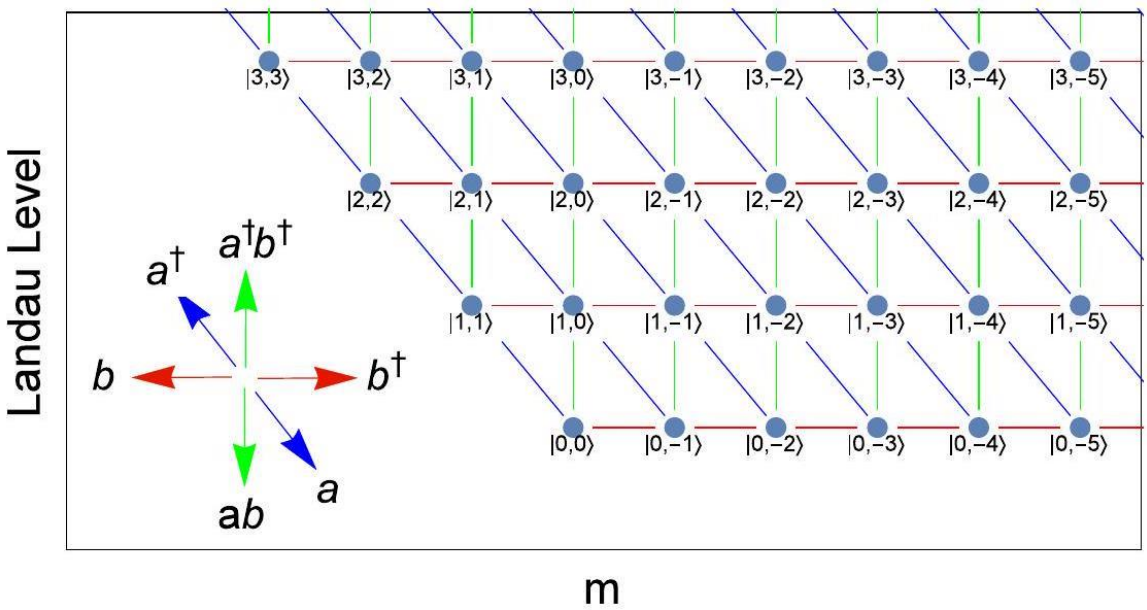

$$b|\epsilon,m\rangle = \begin{Bmatrix} +1, & m<0 \\ -1, & m\geq 0 \end{Bmatrix} \sqrt{\epsilon - m}|\epsilon, m+1\rangle$$

$$b^\dagger|\epsilon,m\rangle = \begin{Bmatrix} +1, & m\leq 0 \\ -1, & m>0 \end{Bmatrix} \sqrt{\epsilon - m + 1}|\epsilon, m-1\rangle$$

$$a|\epsilon,m\rangle = \begin{Bmatrix} +1, & m>0 \\ -1, & m\leq 0 \end{Bmatrix} \sqrt{\epsilon}|\epsilon-1, m-1\rangle$$

$$a^\dagger|\epsilon,m\rangle = \begin{Bmatrix} +1, & m\geq 0 \\ -1, & m<0 \end{Bmatrix} \sqrt{\epsilon+1}|\epsilon+1, m+1\rangle$$

$$ab|\epsilon,m\rangle = -\sqrt{\epsilon}\sqrt{\epsilon - m}|\epsilon-1, m\rangle$$

$$a^\dagger b^\dagger|\epsilon,m\rangle = -\sqrt{\epsilon+1}\sqrt{\epsilon+1-m}|\epsilon+1, m\rangle$$

$$H_{\mathrm{rel}} = -\frac{1}{2\mu}\sum_{j=1}^{N_{\mathrm{rel}}} \nabla_j^2 + \frac{\mu}{8}\sum_{j=1}^{N_{\mathrm{rel}}} \left(x_j^2 + y_j^2\right) + \frac{1}{2\hbar}\sum_{j=1}^{N_{\mathrm{rel}}} L_{z_j}^{\mathrm{rel}}$$

$$\mu = \left(\frac{1}{N}\right)^{1/N_{\mathrm{rel}}}$$

$$R^2 = \sum_{j=1}^{N_{\mathrm{rel}}} \rho_j^2$$

$$H_{\mathrm{rel}} = -\frac{1}{2\mu}\nabla_{R,\mathbf{\Omega}}^2 + \frac{\mu}{8}R^2 + \frac{1}{2\hbar}L_z^{\mathrm{rel,tot}}$$

$$\boldsymbol{\nabla}_{R,\mathbf{\Omega}}^2 = \frac{1}{R^{2N_{\mathrm{rel}}-1}}\partial_R R^{2N_{\mathrm{rel}}-1}\partial_R - \frac{\hat{\boldsymbol{K}}^2}{R^2}$$

$$\hat{\boldsymbol{K}}^2\Phi_{Ku}^{(M)}(\mathbf{\Omega}) = K(K + 2N_{\mathrm{rel}} - 2)\Phi_{Ku}^{(M)}(\mathbf{\Omega})$$

$$\Psi(R,\mathbf{\Omega}) = R^{-N_{\mathrm{rel}}+1/2}F_{n_R K}^{(M)}(R)\Phi_{Ka}^{(M)}(\mathbf{\Omega})$$

$$\left\{-\frac{1}{2\mu}\frac{d^2}{dR^2}+U_K^{(M)}(R)-E\right\}F_{n_RK}^{(M)}(R)=0$$

$$U_K^{(M)}(R)=$$
$$\frac{(K+N_{\text{rel}}-1/2)(K+N_{\text{rel}}-3/2)}{2\mu R^2}+\frac{\mu}{8}R^2+\frac{1}{2}M$$

$$M_{tot}=\sum_{i=1}^{N}m_i.$$

$$K=\sum_{i=1}^{N}(2\epsilon_i-m_i).$$

$$L_{CM}=\frac{\hbar}{N}\sum_{j=1}^{N}\left(a^\dagger a-b^\dagger b\right)_j+\frac{\hbar}{2N}\sum_{j=1}^{N}\sum_{k\neq j}^{N}\left[a_k^\dagger a_j+a_j^\dagger a_k-\left(b_k^\dagger b_j+b_j^\dagger b_k\right)\right],$$
$$H_{CM}=\frac{1}{2}+\frac{1}{N}\sum_{j=1}^{N}a_j^\dagger a_j+\frac{1}{2N}\sum_{j=1}^{N}\sum_{k\neq j}^{N}\left(a_k^\dagger a_j+a_j^\dagger a_k\right),$$

$$\hat{K}^2=\sum_{j=1}^{N}\left(\left[a^\dagger a-b^\dagger b\right]_j^2+(2N-2)\left[a^\dagger a+b^\dagger b\right]_j\right)$$
$$+\sum_{j}\sum_{k\neq j}\left(\left[a^\dagger a+b^\dagger b\right]_j\left[a^\dagger a+b^\dagger b\right]_k-2\left(a_j^\dagger b_j^\dagger a_k b_k+a_j b_j a_k^\dagger b_k^\dagger\right)\right).$$

$$\int\Psi_{K'}^*(\boldsymbol{r}_1,\boldsymbol{r}_2,\dots)V(\boldsymbol{r}_{12})\Psi_K(\boldsymbol{r}_1,\boldsymbol{r}_2,\dots)d\boldsymbol{r}_1d\boldsymbol{r}_2$$
$$=\int|\Psi(\boldsymbol{R}_{CM})|^2d\boldsymbol{R}_{CM}\int\Psi_{K'}^*(R;\boldsymbol{\Omega})V(R;\boldsymbol{\Omega})\Psi_K(R;\boldsymbol{\Omega})R^{2N-1}dRd\boldsymbol{\Omega}$$

$$I=\int\Psi_{K'}^*(R;\boldsymbol{\Omega})V(R;\boldsymbol{\Omega})\Psi_K(R;\boldsymbol{\Omega})R^{2N-1}dRd\boldsymbol{\Omega}$$
$$=\int\Phi_{K'}^*(\boldsymbol{\Omega})\left(\int\mathcal{N}^*e^{-\frac{\mu}{4}R^2}R^{K'}V(R;\boldsymbol{\Omega})\mathcal{N}e^{-\frac{\mu}{4}R^2}R^KR^{2N-1}dR\right)\Phi_K(\boldsymbol{\Omega})d\boldsymbol{\Omega}$$

$$\frac{I}{\langle K'|R^p|K\rangle}=\int\Phi_{K'}^*(\boldsymbol{\Omega})V(\boldsymbol{\Omega})\Phi_K(\boldsymbol{\Omega})d\boldsymbol{\Omega}$$

$$\langle K'|R^p|K\rangle=\left(\frac{2}{\mu}\right)^{p/2}\frac{\Gamma([K+K'+2N+p]/2)}{\sqrt{\Gamma(K+N)\Gamma(K'+N)}}$$

$$\langle N,M|\langle n,m|\hat{O}(r)|N',M'\rangle|n',m'\rangle=\delta_{N,N'}\delta_{M,M'}\langle n,m|\hat{O}(r)|n',m'\rangle$$

$$i+j=N$$
$$k+l=N-M$$
$$\epsilon_1+\epsilon_2=N+n$$
$$m_1+m_2=M+m$$

$$\langle \epsilon_1 m_1 \epsilon_2 m_2 \mid NMnm \rangle$$
$$= \mathcal{C} \frac{\mathcal{A}_1 \mathcal{A}_2}{\mathcal{A}_c \mathcal{A}_r} \sum_{i=0}^{\epsilon_1} \sum_{j=0}^{\epsilon_2} \sum_{k=0}^{\epsilon_1 - m1} \sum_{l=0}^{\epsilon_2 - m_2} (-1)^{2\epsilon_2 - m_2 - j - l} C_{\epsilon_1}^{i} C_{\epsilon_2}^{j} C_{\epsilon_1 - m_1}^{k} C_{\epsilon_2 - m_2}^{l},$$

$$\mathcal{A} = \frac{(-1)^{\min\{n, n-m\}}}{\sqrt{n!\,(n-m)!}},$$

$$K = \sum_{j=1}^{N} \left(2\epsilon_j - m_j\right) = 2n_\epsilon - M_{tot}$$

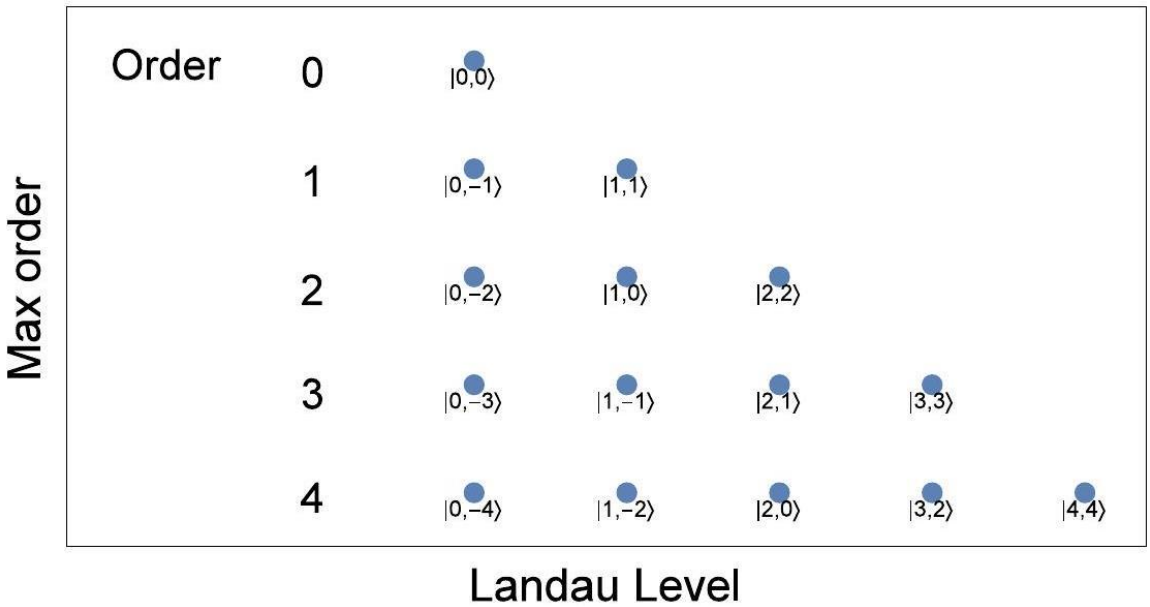

$$\begin{array}{c|ccc} & 2 & 0 & 1 \\ \hline 1 & . & 0 & 0 \\ 1 & . & . & 0 \\ 0 & . & . & . \\ 1 & . & . & . \end{array} \qquad \begin{array}{c|cc} & 1 & 2 \\ \hline 1 & . & 0 \\ 1 & . & . \\ 0 & . & . \\ 1 & . & . \end{array} \qquad \begin{array}{c|ccc} & 2 & 0 & 1 \\ \hline 1 & . & 0 & 0 \\ 0 & . & . & 0 \\ 2 & . & . & . \end{array}$$

$$\begin{array}{c|cc} & 1 & 2 \\ \hline 1 & . & 0 \\ 0 & . & . \\ 2 & . & . \end{array} \qquad \begin{array}{c|ccc} & 2 & 0 & 1 \\ \hline 0 & . & 0 & 0 \\ 2 & . & . & 0 \\ 1 & . & . & . \end{array} \qquad \begin{array}{c|cc} & 1 & 2 \\ \hline 0 & . & 0 \\ 2 & . & . \\ 1 & . & . \end{array} .$$

$$x = \frac{1}{2^{1/2}}\left(a + a^{\dagger} + b + b^{\dagger}\right) y = \frac{\iota}{2^{1/2}}\left(a - a^{\dagger} - b + b^{\dagger}\right)$$
$$\frac{\partial}{\partial x} = \frac{1}{2^{3/2}}\left(a - a^{\dagger} + b - b^{\dagger}\right) \frac{\partial}{\partial y} = \frac{-\iota}{2^{3/2}}\left(-a - a^{\dagger} + b + b^{\dagger}\right)$$

$$x_{CM} = \frac{1}{N}\sum_{j=1}^{N} x_j y_{CM} = \frac{1}{N}\sum_{j=1}^{N} y_j$$
$$\frac{\partial}{\partial x_{CM}} = \sum_{j=1}^{N} \frac{\partial}{\partial x_j} \frac{\partial}{\partial y_{CM}} = \sum_{j=1}^{N} \frac{\partial}{\partial y_j}$$

$$\left[a, a^{\dagger}\right] = 1$$
$$\left[b, b^{\dagger}\right] = 1$$
$$[a, b] = \left[a^{\dagger}, b^{\dagger}\right] = \left[a^{\dagger}, b\right] = \left[a, b^{\dagger}\right] = 0$$

$$
\begin{aligned}
L_{CM} =& -\imath\hbar\left(x_{CM}\frac{\partial}{\partial y_{CM}} - y_{CM}\frac{\partial}{\partial x_{CM}}\right)\\
=& -\frac{\imath\hbar}{N}\sum_{j=1}^{N}\sum_{k=1}^{N}\left(x_j\frac{\partial}{\partial y_k} - y_j\frac{\partial}{\partial x_k}\right)\\
=& -\frac{\hbar}{4N}\sum_{j=1}^{N}\sum_{k=1}^{N}\left[\left(a_j + a_j^\dagger + b_j + b_j^\dagger\right)\left(-a_k - a_k^\dagger + b_k + b_k^\dagger\right)\right.\\
&\left.+\left(a_j - a_j^\dagger - b_j + b_j^\dagger\right)\left(a_k - a_k^\dagger + b_k - b_k^\dagger\right)\right]\\
=& -\frac{\hbar}{2N}\sum_{j=1}^{N}\sum_{k=1}^{N}\left[a_j b_k - b_j a_k + a_j^\dagger b_k^\dagger - b_j^\dagger a_k^\dagger - a_j a_k^\dagger - a_j^\dagger a_k + b_j b_k^\dagger + b_j^\dagger b_k\right]\\
=& -\frac{\hbar}{2N}\sum_{j=1}^{N}\sum_{k=1}^{N}\left[-a_j a_k^\dagger - a_j^\dagger a_k + b_j b_k^\dagger + b_j^\dagger b_k\right]
\end{aligned}
$$

$$
H_{CM} = -\frac{1}{2N}\left(\frac{\partial^2}{\partial x_{CM}^2} + \frac{\partial^2}{\partial y_{CM}^2}\right) + \frac{N}{8}\left(x_{CM}^2 + y_{CM}^2\right) + \frac{1}{2\hbar}L_{CM}
$$

$$
\begin{aligned}
x_{CM}^2 + y_{CM}^2 =& \frac{1}{N^2}\sum_{j=1}^{N}\sum_{k=1}^{N}\left(x_j x_k + y_j y_k\right)\\
=& \frac{1}{2N^2}\sum_{j=1}^{N}\sum_{k=1}^{N}\left[\left(a_j + a_j^\dagger + b_j + b_j^\dagger\right)\left(a_k + a_k^\dagger + b_k + b_k^\dagger\right)\right.\\
&\left.-\left(a_j - a_j^\dagger - b_j + b_j^\dagger\right)\left(a_k - a_k^\dagger - b_k + b_k^\dagger\right)\right]\\
=& \frac{1}{N^2}\sum_{j=1}^{N}\sum_{k=1}^{N}\left[a_j b_k + b_j a_k + a_j^\dagger b_k^\dagger + b_j^\dagger a_k^\dagger + a_j a_k^\dagger + a_j^\dagger a_k + b_j b_k^\dagger + b_j^\dagger b_k\right]
\end{aligned}
$$

$$
\begin{aligned}
\frac{\partial^2}{\partial x_{CM}^2} + \frac{\partial^2}{\partial y_{CM}^2} =& \sum_{j=1}^{N}\sum_{k=1}^{N}\left(\frac{\partial}{\partial x_j}\frac{\partial}{\partial x_k} + \frac{\partial}{\partial y_j}\frac{\partial}{\partial y_k}\right)\\
=& \frac{1}{8}\sum_{j=1}^{N}\sum_{k=1}^{N}\left[\left(a_j - a_j^\dagger + b_j - b_j^\dagger\right)\left(a_k - a_k^\dagger + b_k - b_k^\dagger\right)\right.\\
&\left.-\left(-a_j - a_j^\dagger + b_j + b_j^\dagger\right)\left(-a_k - a_k^\dagger + b_k + b_k^\dagger\right)\right]\\
=& \frac{1}{4}\sum_{j=1}^{N}\sum_{k=1}^{N}\left(a_j b_k + b_j a_k + a_j^\dagger b_k^\dagger + b_j^\dagger a_k^\dagger - a_j a_k^\dagger - a_j^\dagger a_k - b_j b_k^\dagger - b_j^\dagger b_k\right)
\end{aligned}
$$

$$
H_{CM} = \frac{1}{2N}\sum_{j=1}^{N}\sum_{k=1}^{N}\left(a_j a_k^\dagger + a_j^\dagger a_k\right)
$$

$$
\begin{aligned}
\hat{K}^2 =& -R^2\nabla^2 + \sum_{j=1}^{N}\sum_{k=1}^{N}\left(x_j x_k\frac{\partial}{\partial x_j}\frac{\partial}{\partial x_k} + x_j y_k\frac{\partial}{\partial x_j}\frac{\partial}{\partial y_k} + y_j x_k\frac{\partial}{\partial y_j}\frac{\partial}{\partial x_k} + y_j y_k\frac{\partial}{\partial y_j}\frac{\partial}{\partial y_k}\right)\\
&+(2N-1)\sum_{j=1}^{N}\left(x_j\frac{\partial}{\partial x_j} + y_j\frac{\partial}{\partial y_j}\right)
\end{aligned}
$$

$$\hat{K}^2 = \sum_{j=1}^{N}\sum_{k=1}^{N}\left(x_j x_k \frac{\partial}{\partial x_j}\frac{\partial}{\partial x_k} + x_j y_k \frac{\partial}{\partial x_j}\frac{\partial}{\partial y_k} + y_j x_k \frac{\partial}{\partial y_j}\frac{\partial}{\partial x_k} + y_j y_k \frac{\partial}{\partial y_j}\frac{\partial}{\partial y_k}\right)$$
$$-\sum_{j=1}^{N}\sum_{k=1}^{N}\left(x_j^2 + y_j^2\right)\left(\frac{\partial^2}{\partial x_k^2} + \frac{\partial^2}{\partial y_k^2}\right) + (2N-1)\sum_{j=1}^{N}\left(x_j \frac{\partial}{\partial x_j} + y_j \frac{\partial}{\partial y_j}\right).$$

$$\frac{1}{4}\sum_{j=k}\left(aaa^\dagger a^\dagger + aa^\dagger aa^\dagger + a^\dagger aa^\dagger a + a^\dagger a^\dagger aa + bbb^\dagger b^\dagger + bb^\dagger bb^\dagger + b^\dagger bb^\dagger b + b^\dagger b^\dagger bb\right.$$
$$-2\left[aa^\dagger bb^\dagger + aa^\dagger b^\dagger b + a^\dagger abb^\dagger + a^\dagger ab^\dagger b\right]$$
$$\left.+a^\dagger bb^\dagger b^\dagger - a^\dagger b^\dagger b^\dagger b + a^\dagger aab - aaa^\dagger b - abbb^\dagger + ab^\dagger bb + aa^\dagger a^\dagger b^\dagger - a^\dagger a^\dagger ab^\dagger\right)$$

$$\sum_{j=k}\left(1 + a^\dagger aa^\dagger a + b^\dagger bb^\dagger b - 2a^\dagger ab^\dagger b + a^\dagger b^\dagger - ab\right).$$

$$(2N-1)\sum_{j=1}^{N}\left(x_j \frac{\partial}{\partial x_j} + y_j \frac{\partial}{\partial y_j}\right) = (2N-1)\sum_{j=1}^{N}\left(-1 + ab - a^\dagger b^\dagger\right)$$

$$-2N(N-1) + \sum_{j=1}^{N}\left(\left[a_j^\dagger a_j - b_j^\dagger b_j\right]^2 + 2(N-1)\left[a_j b_j - a_j^\dagger b_j^\dagger\right]\right)$$

$$\frac{1}{2}\sum_{j}\sum_{k\neq j}\left(\left[aa^\dagger + 2a^\dagger b^\dagger + bb^\dagger\right]_j\left[aa^\dagger - 2ab + bb^\dagger\right]_k + \left[a^\dagger a + 2ab + b^\dagger b\right]_j\left[a^\dagger a - 2a^\dagger b^\dagger + b^\dagger b\right]_k\right)$$

$$\frac{1}{2}\sum_{j}\sum_{k\neq j}\left(4 + 2\left[a^\dagger a - 2ab + b^\dagger b\right]_k + 2\left[a^\dagger a + 2a^\dagger b^\dagger + b^\dagger b\right]_j\right.$$
$$\left.+\left[a^\dagger a + 2a^\dagger b^\dagger + b^\dagger b\right]_j\left[a^\dagger a - 2ab + b^\dagger b\right]_k + \left[a^\dagger a + 2ab + b^\dagger b\right]_j\left[a^\dagger a - 2a^\dagger b^\dagger + b^\dagger b\right]_k\right)$$

$$2N(N-1) + 2(N-1)\sum_{j=1}^{N}\left(a_j^\dagger a_j + b_j^\dagger b_j - a_j b_j + a_j^\dagger b_j^\dagger\right)$$
$$+\sum_{j}\sum_{k\neq j}\left(\left[a^\dagger a + b^\dagger b\right]_j\left[a^\dagger a + b^\dagger b\right]_k - 2\left(a_j^\dagger b_j^\dagger a_k b_k + a_j b_j a_k^\dagger b_k^\dagger\right)\right).$$

$$\hat{K}^2 = \sum_{j=1}^{N}\left(\left[a^\dagger a - b^\dagger b\right]_j^2 + (2N-2)\left[a^\dagger a + b^\dagger b\right]_j\right)$$
$$+\sum_{j}\sum_{k\neq j}\left(\left[a^\dagger a + b^\dagger b\right]_j\left[a^\dagger a + b^\dagger b\right]_k - 2\left(a_j^\dagger b_j^\dagger a_k b_k + a_j b_j a_k^\dagger b_k^\dagger\right)\right).$$

$$|\epsilon, m> = \mathcal{A}\hat{a}^\dagger \hat{b}^{\dagger\epsilon-m}|0>$$

$$\mathcal{A}\hat{a}\hat{b}^{\epsilon-m}|\epsilon, m> = |0>$$

$$\mathcal{A} = \frac{(-1)^{\min\{\epsilon,\epsilon-m\}}}{\sqrt{\epsilon!\,(\epsilon-m)!}}$$

$$\min\{\epsilon, n-m\} = \epsilon - \frac{m+|m|}{2}$$

$$\begin{aligned} a_{CM} &= \frac{1}{\sqrt{2}}(a_1 + a_2) \\ a_r &= \frac{1}{\sqrt{2}}(a_1 - a_2) \\ b_{CM} &= \frac{1}{\sqrt{2}}(b_1 + b_2) \\ a_r &= \frac{1}{\sqrt{2}}(b_1 - b_2) \end{aligned}$$

$$< \epsilon_1 m_1 \epsilon_2 m_2| =< 0|\mathcal{A}_1\mathcal{A}_2\hat{a}_1^{\epsilon_1}\hat{b}_1^{\epsilon_1-m_1}\hat{a}_2^{\epsilon_2}\hat{b}_2^{\epsilon_2-m_2}$$

$$\begin{aligned} &\hat{a}_1^{\epsilon_1}\hat{b}_1^{\epsilon_1-m_1}\hat{a}_2^{\epsilon_2}\hat{b}_2^{\epsilon_2-m_2} \\ =&\mathcal{C}(\hat{a}_c+\hat{a}_r)^{\epsilon_1}\left(\hat{b}_c+\hat{b}_r\right)^{\epsilon_1-m1}(\hat{a}_c-\hat{a}_r)^{\epsilon_2}\left(\hat{b}_c-\hat{b}_r\right)^{\epsilon_2-m_2} \\ =&\mathcal{C}\sum_{i=0}^{\epsilon_1}\sum_{j=0}^{\epsilon_2}\sum_{k=0}^{\epsilon_1-m_1}\sum_{l=0}^{\epsilon_2-m_2}(-1)^{2\epsilon_2-m_2-j-l} \\ &\times C_{\epsilon_1}^{i}C_{\epsilon_2}^{j}C_{\epsilon_1-m_1}^{k}C_{\epsilon_2-m_2}^{l}\hat{a}_c^{i+j}\hat{a}_r^{\epsilon_1+\epsilon_2-i-j}\hat{b}_c^{k+l}\hat{b}_r^{\epsilon_1+\epsilon_2-m_1-m_2-k-l} \end{aligned}$$

$$\begin{aligned} &\langle\epsilon_1 m_1 \epsilon_2 m_2 \mid NMnm\rangle \\ =&\mathcal{C}\frac{\mathcal{A}_1\mathcal{A}_2}{\mathcal{A}_c\mathcal{A}_r}\sum_{i=0}^{\epsilon_1}\sum_{j=0}^{\epsilon_2}\sum_{k=0}^{\epsilon_1-m1}\sum_{l=0}^{\epsilon_2-m_2}(-1)^{2\epsilon_2-m_2-j-l}C_{\epsilon_1}^{i}C_{\epsilon_2}^{j}C_{\epsilon_1-m_1}^{k}C_{\epsilon_2-m_2}^{l} \end{aligned}$$

$$\begin{aligned} D_{\mathrm{FS}}(\Psi,\Psi') &= \arccos|\langle\Psi \mid \Psi'\rangle| \\ D_{\mathrm{ACFC}}(\Psi,\Psi') &= \sqrt{1-|\langle\Psi \mid \Psi'\rangle|} \\ D_{\mathrm{BRLCM}}(\Psi,\Psi') &= 1-|\langle\Psi \mid \Psi'\rangle|^2 \end{aligned}$$

$$\begin{aligned} 1-|\langle\Phi_{\mathrm{HF}} \mid \Psi_0\rangle|^2 &= D_{\mathrm{BRLCM}}(\Phi_{\mathrm{HF}},\Psi_0) \\ &\leq \frac{|E_{\mathrm{corr}}|}{E_{\mathrm{gap}}} = \frac{E_{\mathrm{HF}}-E_0}{E_1-E_0}, \end{aligned}$$

$$\mathcal{W} = \mathrm{span}\{\phi_p\}_{p=1}^{M}$$

$$|\Phi\rangle = \frac{1}{\sqrt{n!}}\begin{vmatrix} \varphi_1(1) & \varphi_2(1) & \dots & \varphi_n(1) \\ \varphi_1(2) & \varphi_2(2) & \dots & \varphi_n(2) \\ \vdots & \vdots & \ddots & \vdots \\ \varphi_1(n) & \varphi_2(n) & \dots & \varphi_n(n) \end{vmatrix} = \varphi_1 \wedge \varphi_2 \wedge \dots \wedge \varphi_n$$

$$\begin{aligned} |\Psi\rangle &= \sum_{I,|I|=n} C_I\phi_{I_1}\wedge\dots\wedge\phi_{I_n} \\ &= \sum_{I,|I|=n} C_I a_{I_1}^{\dagger}\dots a_{I_n}^{\dagger}|\rangle \\ &= \sum_{I,|I|=n} C_I|\Phi_I\rangle \end{aligned}$$

$$|\Psi\rangle = \phi_1' \wedge \ldots \wedge \phi_n'$$

$$|\Phi\rangle = \varphi_1 \wedge \ldots \wedge \varphi_n$$

$$\mathrm{span}\{\varphi_1, \ldots, \varphi_n\} \subset \mathcal{W}$$

$$\dim(\mathrm{span}\{\varphi_1, \ldots, \varphi_n\}) = n$$

$$\varphi_i' = \sum_{p=1}^{M} \varphi_p U_i^p$$

$$\mathrm{span}\{\varphi_1, \ldots, \varphi_n\} = \mathrm{span}\{\varphi_1', \ldots, \varphi_n'\}.$$

$$\varphi_1' \wedge \ldots \wedge \varphi_n' = \lambda \varphi_1 \wedge \ldots \wedge \varphi_n \; \lambda \neq 0$$

$$\begin{aligned} \mathrm{Gr}(n, \mathcal{W}) &\hookrightarrow \mathbb{P} \bigwedge^{n} \mathcal{W} \\ [|\Phi\rangle] &\mapsto [\varphi_1 \wedge \ldots \wedge \varphi_n] \end{aligned}$$

$$\begin{aligned} [|\Phi\rangle] &= [\varphi_1 \wedge \ldots \wedge \varphi_n] \\ &= \mathrm{span}\{\varphi_1, \ldots, \varphi_n\} \in \mathrm{Gr}(n, \mathcal{W}) \subset \mathbb{P} \bigwedge^{n} \mathcal{W}. \end{aligned}$$

$$|\Phi\rangle = \phi_1' \wedge \ldots \wedge \phi_n' \;\Leftrightarrow\; U \in \mathbb{R}^{M \times n}$$

$$\phi_i' = \sum_{p=1}^{M} \phi_p U_i^p$$

$$|\Phi_0\rangle = \phi_1 \wedge \ldots \wedge \phi_n$$

$$|\Phi\rangle = e^{\hat{K}} |\Phi_0\rangle,$$

$$\hat{K} = \sum_{i=1}^{n} \sum_{a=n+1}^{M} K_i^a \left(a_a^\dagger a_i - a_i^\dagger a_a\right)$$

$$U_{\text{full}} = \exp\left\{\begin{pmatrix} \mathbf{0}_{n\times n} & -\mathbf{K}^T \\ \mathbf{K} & \mathbf{0}_{(M-n)\times(M-n)} \end{pmatrix}\right\}.$$

$$\begin{aligned} \mathcal{W}_{H_2} &= \mathrm{span}\{\phi_+, \phi_-, \overline{\phi_+}, \overline{\phi_-}\} \\ \Lambda^2 \mathcal{W}_{H_2} &= \mathrm{span}\{\phi_+ \wedge \overline{\phi_+}, \phi_+ \wedge \overline{\phi_-}, \\ &\quad \phi_- \wedge \overline{\phi_+}, \phi_- \wedge \overline{\phi_-}, \\ &\quad \phi_+ \wedge \phi_-, \bar{\phi}_+ \wedge \bar{\phi}_-\} \\ \left(\Lambda^2 \mathcal{W}_{H_2}\right)_{M_S=0} &= \mathrm{span}\{\phi_+ \wedge \overline{\phi_+}, \phi_+ \wedge \overline{\phi_-}, \\ &\quad \phi_- \wedge \overline{\phi_+}, \phi_- \wedge \overline{\phi_-}\}. \end{aligned}$$

$$\left(\bigwedge^{2} \mathcal{W}_{H_2}\right)_{M_S=0} \left(\bigwedge^{2} \mathcal{W}_{H_2}\right)_{M_S=0}$$

$$|\Psi\rangle = C_{13}\phi_+ \wedge \overline{\phi_+} + C_{14}\phi_+ \wedge \overline{\phi_-} + C_{23}\phi_- \wedge \overline{\phi_+} + C_{24}\phi_- \wedge \overline{\phi_-}.$$

$$C_{12}C_{34} - C_{13}C_{24} + C_{14}C_{23} = 0$$

$$C_{24}\sqrt{1 - (C_{24}^2 + C_{14}^2 + C_{23}^2)} - C_{14}C_{23} = 0$$

$$|\Psi\rangle = C_{13}\phi_+ \wedge \overline{\phi_+} + C_{24}\phi_- \wedge \overline{\phi_-}.$$

$$|\Phi_1\rangle = C_{13}\phi_+ \wedge \overline{\phi_+} + C_{23}\phi_- \wedge \overline{\phi_+}$$
$$|\Phi_2\rangle = C_{13}\phi_+ \wedge \overline{\phi_+} + C_{14}\phi_+ \wedge \overline{\phi_-}$$

$$|\Phi_1\rangle = (C_{13}\phi_+ + C_{23}\phi_-) \wedge \overline{\phi_+}$$
$$|\Phi_2\rangle = \phi_+ \wedge \left(C_{13}\overline{\phi_+} + C_{14}\overline{\phi_-}\right).$$

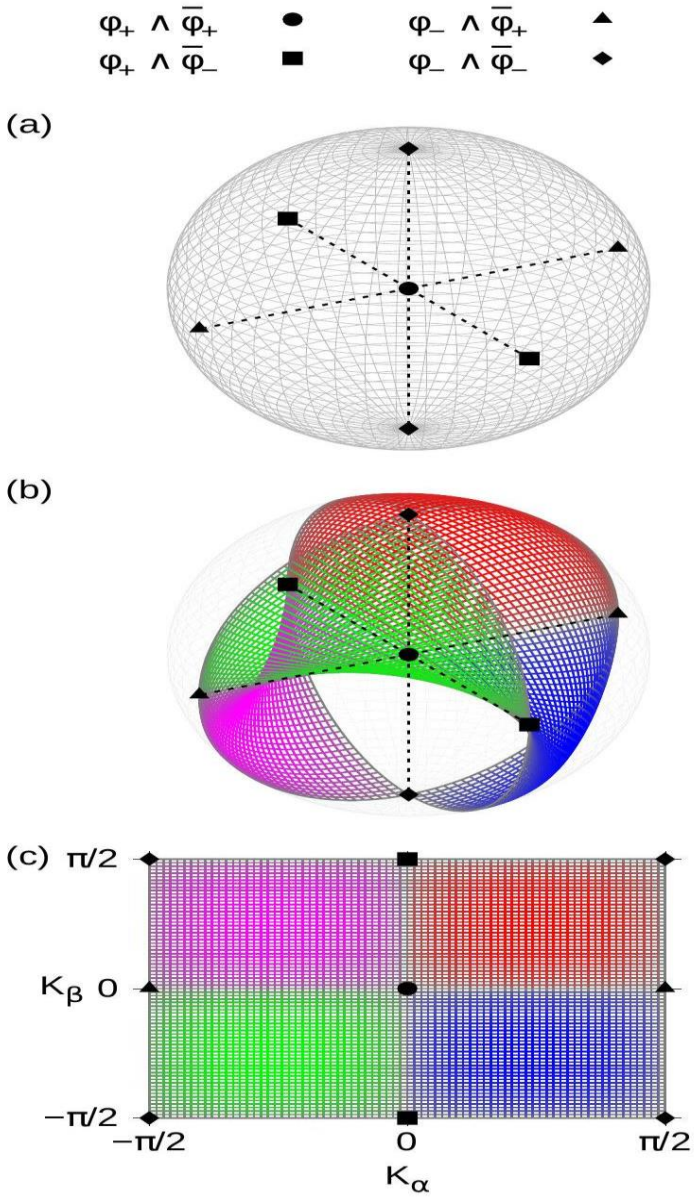

$$|\Phi\rangle = (a\phi_+ + b\phi_-) \wedge \left(c\overline{\phi_+} + d\overline{\phi_-}\right)$$

$$U = \begin{pmatrix} a & 0 \\ b & 0 \\ 0 & c \\ 0 & d \end{pmatrix}$$

$$\begin{aligned} |\Phi\rangle =& (\cos(K_\alpha)\phi_+ + \sin(K_\alpha)\phi_-) \\ & \wedge \left(\cos\left(K_\beta\right)\overline{\phi_+} + \sin\left(K_\beta\right)\overline{\phi_-}\right) \\ =& e^{\hat{K}}\left(\phi_+ \wedge \overline{\phi_+}\right) \end{aligned}$$

$$f([|\Phi\rangle]) = \frac{|\langle \Phi \mid \Psi_{\text{ext}} \rangle|}{\sqrt{\langle \Phi \mid \Phi \rangle \langle \Psi_{\text{ext}} \mid \Psi_{\text{ext}} \rangle}}$$

$$\begin{aligned} f_\square : \mathbb{R}^{n(M-n)} &\to \mathbb{R} \\ \mathbf{K} &\mapsto f\left(e^{\hat{K}}|\Phi_0\rangle\right), \end{aligned}$$

$$\mathfrak{H}\mathbf{K} = -\mathfrak{J},$$

$$|\Psi_{\text{ext}}\rangle = C_0|\Phi_0\rangle + \sum_{i,a} C_i^a |\Phi_i^a\rangle + \frac{1}{4}\sum_{i,j,a,b} C_{ij}^{ab}\left|\Phi_{ij}^{ab}\right\rangle + \cdots,$$

$$f_\square(\mathbf{K} = 0) = C_0$$

$$\mathfrak{J}_i^a = \frac{\partial f_\square(\mathbf{K} = 0)}{\partial K_i^a} = (-1)^{i+n} C_i^a$$

$$\mathfrak{H}_{ij}^{ab} = \frac{\partial^2 f_\square(\mathbf{K} = 0)}{\partial K_i^a \partial K_j^b} = \begin{cases} -C_0 & a = b, i = j \\ -(-1)^{i+j} C_{ij}^{ab} & \text{otherwise} \end{cases}.$$

$$\begin{aligned} |\Psi_{\text{ext}}\rangle =& \sum_I C_I |\Phi_I\rangle = \sum_I C_I \phi_{I_1} \wedge \ldots \wedge \phi_{I_n} \\ =& \sum_I C_I' |\Phi_I'\rangle = \sum_I C_I' \phi_{I_1}' \wedge \ldots \wedge \phi_{I_n}' \\ C_I' =& \sum_J C_J \det\left((U_{\text{full}})_J^I\right) \end{aligned}$$

$$\begin{aligned} f_\diamond : \mathrm{ST}(n, M) &\to \mathbb{R} \\ U &\mapsto f(\mathrm{span}(U)), \end{aligned}$$

$$\Pi_{U_\perp} D\left(\Pi_{\cdot\perp} \mathrm{grad} f_\diamond(\cdot)\right)(U)[\eta_{\diamond U}] = -\Pi_{U_\perp} \mathrm{grad} f_\diamond(U);$$

$$[|\Phi\rangle] = \mathrm{span}(U\mathcal{V}\cos\Sigma + \mathcal{U}\sin\Sigma)$$

$$(\mathrm{grad} f_\diamond(U))_q^p = \frac{\partial f_\diamond(U)}{\partial U_q^p}(U);\ DF(x)[y] = \frac{d}{dt}F(x + ty)\Big|_{t=0}$$

$$f([|\Phi\rangle]) = f_\diamond(U) = \sum_I C_I F_I,$$

$$\sum_{r=1}^{M}\sum_{s=1}^{n} \mathcal{H}_{qs}^{pr}(\eta_{\diamond U})_s^r = -\mathcal{J}_q^p$$

$$\mathcal{H}_{qs}^{pr} = \sum_{\bar{p}=1}^{M} \left(\Pi_{U_\perp}\right)_{\bar{p}}^{p} \sum_{I} C_I \left(\tilde{\mathbf{H}}_I\right)_{qs}^{\bar{p}r}$$

$$\mathcal{J}_q^p = \sum_{\bar{p}=1}^{M} \left(\Pi_{U_\perp}\right)_{\bar{p}}^{p} \sum_{I} C_I \left(\mathbf{G}_I\right)_q^{\bar{p}}$$

$$(F_I) = \det(U|_I)$$

$$(\mathbf{G}_I)_q^p = \det\left(\left(U \overset{q}{\leftarrow} e_p\right)\Big|_I\right)$$

$$(\mathbf{H}_I)_{qs}^{pr} = \det\left(\left(U \overset{q}{\leftarrow} e_p \overset{s}{\leftarrow} e_r\right)\Big|_I\right)$$

$$\left(\tilde{\mathbf{H}}_I\right)_{qs}^{pr} = \begin{cases} (\mathbf{H}_I)_{qs}^{pr} & \text{if } s \neq q \\ -F_I \delta_{pr} & \text{otherwise} \end{cases}$$

$$\begin{aligned}
\frac{\partial F_I}{\partial U_q^p}(U) &= \frac{\partial \det(U|_I)}{\partial U_q^p}(U) \\
&= \operatorname{tr}\left(\operatorname{adj}(U|_I) \frac{\partial (U|_I)}{\partial U_q^p}(U)\right) \\
&= \operatorname{tr}\begin{pmatrix} \det\left(U \overset{1}{\leftarrow} \delta_{1q} e_p\right)\Big|_I & \dots & \det\left(U \overset{1}{\leftarrow} \delta_{nq} e_p\right)\Big|_I \\ \vdots & \ddots & \vdots \\ \det\left(U \overset{n}{\leftarrow} \delta_{1q} e_p\right)\Big|_I & \dots & \det\left(U \overset{n}{\leftarrow} \delta_{nq} e_p\right)\Big|_I \end{pmatrix} \\
&= (\mathbf{G}_I)_q^p,
\end{aligned}$$

$$(\mathbf{H}_I)_{qs}^{pr} = \left(\mathbf{H}_{I_1^\alpha}\right)_{qs}^{pr} \prod_{\Gamma \neq 1} F_{I_\Gamma^\alpha} \prod_{\Gamma} F_{I_\Gamma^\beta},$$

$$(\mathbf{H}_I)_{qs}^{pr} = \left(\mathbf{G}_{I_1^\alpha}\right)_q^p \left(\mathbf{G}_{I_1^\beta}\right)_s^r \prod_{\Gamma \neq 1} F_{I_\Gamma^\alpha} F_{I_\Gamma^\beta}.$$

$$|\Phi_0\rangle = \phi_1 \wedge \phi_2 \wedge \dots \wedge \phi_n$$

$$\mathcal{W} = [\phi_1 \wedge \phi_2 \wedge \dots \wedge \phi_n \wedge \dots \wedge \phi_M]$$

$$U = \begin{pmatrix} \mathbf{1}_{n\times n} \\ \mathbf{0}_{(M-n)\times n} \end{pmatrix}$$

$$\mathcal{J} = \begin{pmatrix} \mathbf{0}_{n\times n} \\ \mathfrak{J} \end{pmatrix}$$

$$\mathcal{H}_q^p = \begin{pmatrix} \mathbf{a}_{n\times n} \\ \mathfrak{H}_q^p \end{pmatrix}.$$

$$\eta_{\circ U} = \begin{pmatrix} \mathbf{0}_{n\times n} \\ \mathbf{K} \end{pmatrix} = \mathcal{U}\Sigma\mathcal{V}^T$$

$$[|\Phi\rangle] = \left[e^{\hat{K}}|\Phi_0\rangle\right] = \operatorname{span}(U\mathcal{V}\cos\,\Sigma + \mathcal{U}\sin\,\Sigma).$$

$$N_{\text{full}}^2 = \binom{K}{n}^2 = \left(\frac{K!}{n!\,(K-n)!}\right)^2 \sim \frac{1}{n^2}\left(\frac{K}{n}\right)^{2K}$$

$$N(1+nK+(nK)^2) \sim Nn^2K^2$$

$$\left(\frac{K!}{n!\,(K-n)!}\right)(1+nK+(nK)^2) \sim \left(\frac{K}{n}\right)^K nK^2$$

$$+n(K-n)+\frac{n(n-1)(K-n)(K-n-1)}{4}\Big) \times (1+nK+(nK)^2) \sim n^4K^4$$

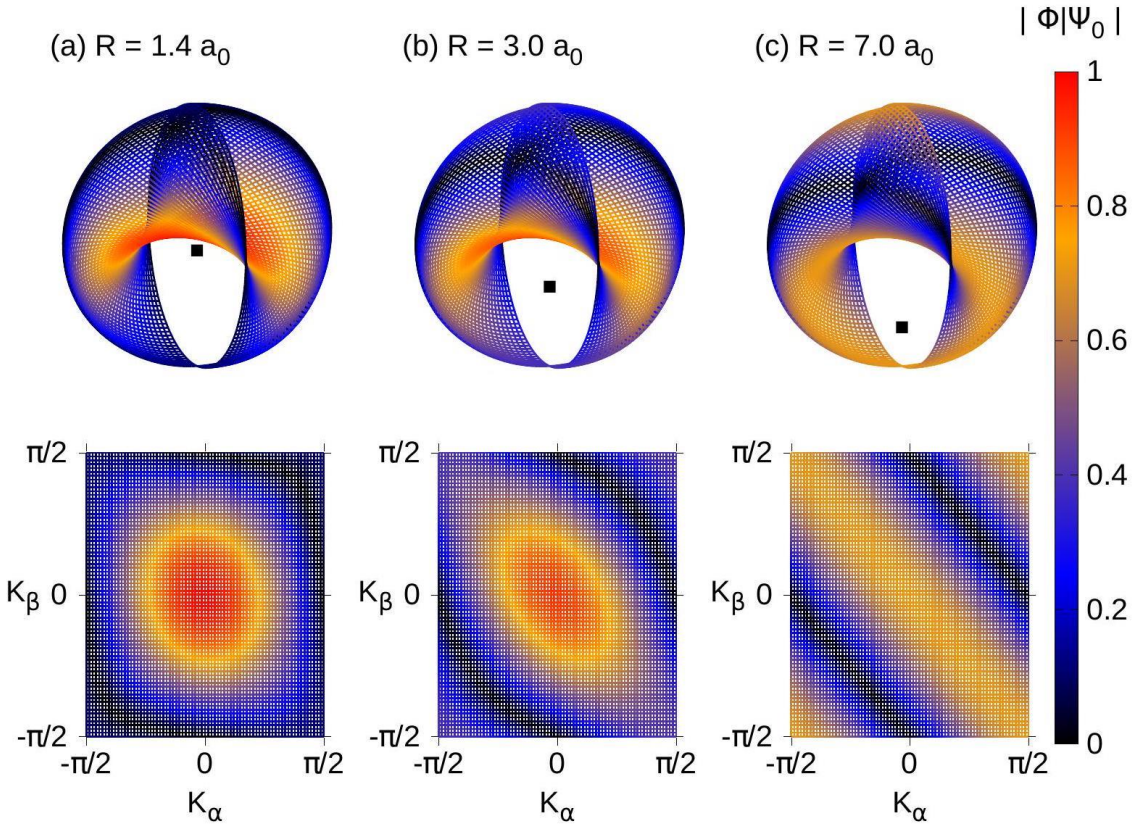

$$\langle \Phi(K_\alpha, K_\beta) \mid \Psi_0 \rangle = C_0 \cos(K_\alpha)\cos(K_\beta) + \sqrt{1-C_0^2}\sin(K_\alpha)\sin(K_\beta)$$

$$\begin{aligned}|\Phi\rangle &= (\cos(K)\phi_+ + \sin(K)\phi_-) \\ &\quad \wedge \left(\cos(-K)\overline{\phi_+} + \sin(-K)\overline{\phi_-}\right) \\ &= \left(a\phi_+ + \sqrt{1-a^2}\phi_-\right) \\ &\quad \wedge \left(a\overline{\phi_+} - \sqrt{1-a^2}\overline{\phi_-}\right)\end{aligned}$$

$$\begin{aligned}\langle \Phi_{\mathrm{HF}} \mid \Psi_{\mathrm{CISD}} \rangle &= \langle \Phi_{\mathrm{HF}} | \hat{P}_{\mathrm{minD}} + \hat{Q}_{\mathrm{minD}} | \Psi_{\mathrm{CISD}} \rangle \\ &= \langle \Phi_{\mathrm{HF}} \mid \Phi_{\mathrm{minD}} \rangle \langle \Phi_{\mathrm{minD}} \mid \Psi_{\mathrm{CISD}} \rangle \\ &\quad + \langle \Phi_{\mathrm{HF}} | \hat{Q}_{\mathrm{minD}} | \Psi_{\mathrm{CISD}} \rangle \\ &\approx \langle \Phi_{\mathrm{HF}} \mid \Phi_{\mathrm{minD}} \rangle \langle \Phi_{\mathrm{minD}} \mid \Psi_{\mathrm{CISD}} \rangle,\end{aligned}$$

$$\frac{\langle \Phi_{\mathrm{HF}} \mid \Psi_{\mathrm{CISD}} \rangle}{\langle \Phi_{\mathrm{min}} \mid \Psi_{\mathrm{CISD}} \rangle} \approx \langle \Phi_{\mathrm{minD}} \mid \Phi_{\mathrm{HF}} \rangle.$$

$$\mathcal{W} = \mathcal{W}_1^{\alpha} \oplus \cdots \oplus \mathcal{W}_g^{\alpha} \oplus \mathcal{W}_1^{\beta} \oplus \cdots \oplus \mathcal{W}_g^{\beta},$$

$$\mathcal{W}_{\Gamma}^{\sigma} = \left[\phi_1^{\Gamma} \otimes \sigma \wedge \ldots \wedge \phi_{M_\Gamma}^{\Gamma} \otimes \sigma\right].$$

$$\hat{K} = \sum_{\Gamma} \sum_{(i,a)\in\Gamma} K_i^{a,\Gamma}\left(E_i^{a,\Gamma} - E_a^{i,\Gamma}\right),$$

$$E_q^{p,\Gamma} = a_{\alpha p,\Gamma}^{\dagger} a_{\alpha q,\Gamma} + a_{\beta p,\Gamma}^{\dagger} a_{\beta q,\Gamma}$$

$$f_{\diamond}(U) = \sum_{\substack{I \\ \mathrm{occ}(I)=\mathrm{occ}(U)}} C_I \prod_{\Gamma} F_{I_\alpha^\Gamma} F_{I_\beta^\Gamma},$$

$$\left(\mathcal{H}_{\sigma\Gamma}^{\sigma'\Gamma'}\right)_{qs}^{pr} \left((\eta_{\diamond U})_{\sigma'\Gamma'}\right)_s^r = -\left(\mathcal{J}_{\sigma\Gamma}\right)_q^p$$

$$(A \otimes B)_{qs}^{pr} = A_q^p B_s^r.$$

$$\mathcal{J}_{\sigma\Gamma} = \Pi_{U\sigma}^{\Gamma} \perp \sum_{\substack{I \\ \mathrm{occ}(I)=\mathrm{occ}(U)}} C_I \left(\prod_{\{\sigma',\Gamma'\}\neq\{\sigma,\Gamma\}} F_{I_{\sigma'}^{\Gamma'}} \right) \mathbf{G}_{I_\sigma^\Gamma}$$

$$\mathcal{H}_{\sigma\Gamma}^{\sigma\Gamma} = \left(\Pi_{U\sigma}^{\Gamma} \perp \otimes \mathbb{1}\right) \sum_{\substack{I \\ \mathrm{occ}(I)=\mathrm{occ}(U)}} C_I \left(\prod_{\{\sigma',\Gamma'\}\neq\{\sigma,\Gamma\}} F_{I_{\sigma'}^{\Gamma'}} \right) \tilde{\mathbf{H}}_{I_\sigma^\Gamma}$$

$$\mathcal{H}_{\sigma\Gamma}^{\sigma'\Gamma'} = \left(\Pi_{U_\sigma^\Gamma \perp} \otimes \Pi_{U_{\sigma'}^{\Gamma'} \perp}\right)$$

$$\sum_{\substack{I \\ \mathrm{occ}(I)=\mathrm{occ}(U)}} C_I \left(\prod_{\substack{\{\sigma',\Gamma'\}\neq\{\sigma',\Gamma'\} \\ \{\sigma'',\Gamma''\}\neq\{\sigma,\Gamma\}}} F_{I_{\sigma''}^{\Gamma''}} \right) \mathbf{G}_{I_\sigma^\Gamma} \otimes \mathbf{G}_{I_{\sigma'}^{\Gamma'}},$$

$$U|_I, \left(U \overset{q}{\leftarrow} e_p\right)\Big|_I \left(U \overset{q}{\leftarrow} e_p \overset{s}{\leftarrow} e_r\right)\Big|_I$$

$$\begin{aligned} |\Phi_0\rangle &= \phi_1^{\Gamma=1} \wedge \ldots \wedge \phi_{n_g}^{\Gamma=g} \wedge \bar{\phi}_1^{\Gamma=1} \wedge \ldots \wedge \bar{\phi}_{n_g}^{\Gamma=g} \\ &= |\Phi_0\rangle_1 \wedge \ldots \wedge |\Phi_0\rangle_g \wedge |\bar{\Phi}_0\rangle_1 \wedge \ldots \wedge |\bar{\Phi}_0\rangle_g \end{aligned}$$

$$\begin{aligned} |\Phi_i^a\rangle_\Gamma = &|\Phi_0\rangle_1 \wedge \ldots \wedge \phi_1^\Gamma \wedge \ldots \wedge \phi_{i-1}^\Gamma \\ &\wedge \phi_{i+1}^\Gamma \wedge \ldots \wedge \phi_{n_\Gamma}^\Gamma \wedge \phi_a^\Gamma \wedge \ldots \wedge |\bar{\Phi}_0\rangle_g \end{aligned}$$

$$
\begin{aligned}
|\Psi_{\mathrm{CISD}}\rangle = & C_0|\Phi_0\rangle \\
& + \sum_{\Gamma} \sum_{(i,a)\in\Gamma} C_i^{a,\Gamma}(|\Phi_i^a\rangle_\Gamma + |\bar{\Phi}_i^a\rangle_\Gamma) \\
& + \sum_{\Gamma} \sum_{\substack{(i>j)\\(a>b)}} C_{ij}^{ab,\Gamma}\left(\left|\Phi_{ij}^{ab}\right\rangle_\Gamma + \left|\bar{\Phi}_{ij}^{ab}\right\rangle_\Gamma\right) \\
& + \sum_{\Gamma} \sum_{\substack{(i,a)\\(j,b)}} \mathcal{C}_{ij}^{ab,\Gamma}|\Phi_i^a\rangle_\Gamma \dots \left|\bar{\Phi}_j^b\right\rangle_\Gamma \\
& + \sum_{\Gamma>\Gamma'} \sum_{\substack{(i,a)\in\Gamma\\(j,b)\in\Gamma'}} \mathcal{A}_{ij}^{ab,\Gamma\Gamma'}\left(\left|\Phi_j^b\right\rangle_{\Gamma'} \dots |\Phi_i^a\rangle_\Gamma\right. \\
& \left. + \left|\bar{\Phi}_j^b\right\rangle_{\Gamma'} \dots |\bar{\Phi}_i^a\rangle_\Gamma\right) \\
& + \sum_{\Gamma>\Gamma'} \sum_{\substack{(i,a)\in\Gamma\\(j,b)\in\Gamma'}} \mathcal{B}_{ij}^{ab,\Gamma\Gamma'}\left(\left|\Phi_j^b\right\rangle_{\Gamma'} \dots |\bar{\Phi}_i^a\rangle_\Gamma\right. \\
& \left. + |\Phi_i^a\rangle_\Gamma \dots \left|\bar{\Phi}_j^b\right\rangle_{\Gamma'}\right) \\
& \sum_{\substack{I \text{ doubles over } |\Phi_0\rangle \\ \mathrm{occ}\,(I) \neq \mathrm{occ}\,(0)}} C_I|\Phi_I\rangle
\end{aligned}
$$

$$
\begin{aligned}
\mathcal{D}_{ij}^{ab,\Gamma\Gamma} &= \mathcal{C}_{ij}^{ab,\Gamma} \\
\mathcal{D}_{ij}^{ab,\Gamma\Gamma'} &= \mathcal{A}_{ij}^{ab,\Gamma\Gamma'} + \mathcal{B}_{ij}^{ab,\Gamma\Gamma'} \quad \text{for } \Gamma \neq \Gamma'.
\end{aligned}
$$

$$
\begin{aligned}
\mathcal{F}_0 &= \prod_{\Gamma} F_{I_0^\Gamma}^2 \\
\mathcal{F}_0^\Gamma &= \prod_{\Gamma'\neq\Gamma} F_{I_0^{\Gamma'}}^2 \\
\mathcal{F}_0^{\Gamma\Gamma'} &= \prod_{\substack{\Gamma''\neq\Gamma\\ \Gamma''\neq\Gamma'}} F_{I_0^{\Gamma''}}^2,
\end{aligned}
$$

$$
\mathcal{K}^{\Gamma\Gamma'} = 2 \sum_{\substack{(i,a)\in\Gamma\\(j,b)\in\Gamma'}} \mathcal{D}_{ij}^{ab,\Gamma\Gamma'} F_{I_0^\Gamma} F_{I_0^{\Gamma'}} F_{I_i^{a,\Gamma}} F_{I_j^{b,\Gamma'}} \quad \text{for } \Gamma \neq \Gamma'
$$

$$
\begin{aligned}
\mathcal{L}^\Gamma = & 2F_{I_0^\Gamma}\left(\sum_{(i,a)\in\Gamma} \mathcal{C}_i^{a,\Gamma} F_{I_i^{a,\Gamma}} + \sum_{\substack{(i>j)\\(a>b)}} \mathcal{C}_{ij}^{ab,\Gamma} F_{I_{ij}^{ab,\Gamma}}\right) \\
& + \sum_{\substack{(i,a)\\(j,b)}} \mathcal{D}_{ij}^{ab,\Gamma\Gamma} F_{I_i^{a,\Gamma}} F_{I_j^{b,\Gamma}}
\end{aligned}
$$

$$
f_\diamond(U) = C_0\mathcal{F}_0 + \sum_{\Gamma} \mathcal{F}_0^\Gamma \mathcal{L}^\Gamma + \sum_{\Gamma>\Gamma'} \mathcal{F}_0^{\Gamma\Gamma'} \mathcal{K}^{\Gamma\Gamma'}
$$

$$\hat{\mathbf{G}}_{ia}^{\Gamma} = F_{I_0^{\Gamma}}\mathbf{G}_{I_i^{a,\Gamma}} + F_{I_i^{a,\Gamma}}\mathbf{G}_{I_0^{\Gamma}}$$

$$\bar{C}_i^{a,\Gamma} = C_i^{a,\Gamma} + \sum_{\bar{\Gamma}\neq\Gamma} \frac{1}{F_{I_0^{\bar{\Gamma}}}} \sum_{(j,b)\in\bar{\Gamma}} F_{I_j^{b,\bar{\Gamma}}}\mathcal{D}_{ij}^{ab,\Gamma\bar{\Gamma}}$$

$$\begin{aligned}\mathcal{M}^{\Gamma} =& C_0 F_{I_0^{\Gamma}}\mathbf{G}_{I_0^{\Gamma}} \\ &+ \sum_{(i,a)\in\Gamma} \bar{C}_i^{a,\Gamma}\hat{\mathbf{G}}_{ia}^{\Gamma} \\ &+ \sum_{\substack{(i>j)\\(a>b)}} C_{ij}^{ab,\Gamma}\left(F_{I_0^{\Gamma}}\mathbf{G}_{I_{ij}^{ab,\Gamma}} + F_{I_{ij}^{ab,\Gamma}}\mathbf{G}_{I_0^{\Gamma}}\right) \\ &+ \sum_{\substack{(i,a)\\(j,b)}} \mathcal{D}_{ij}^{ab,\Gamma\Gamma} F_{I_i^{a,\Gamma}}\mathbf{G}_{I_j^{b,\Gamma}}\end{aligned}$$

$$\begin{aligned}\mathcal{G}^{\Gamma} =& C_0\mathbf{G}_{I_0^{\Gamma}} \otimes \mathbf{G}_{I_0^{\Gamma}} \\ &+ \sum_{\substack{(i,a)\in\Gamma\\ C_i}} \bar{C}_i^{a,\Gamma}\left(\mathbf{G}_{I_i^{a,\Gamma}} \otimes \mathbf{G}_{I_0^{\Gamma}} + \mathbf{G}_{I_0^{\Gamma}} \otimes \mathbf{G}_{I_i^{a,\Gamma}}\right) \\ &+ \sum_{\substack{(i>j)\\(a>b)}} C_{ij}^{ab,\Gamma}\left(\mathbf{G}_{I_0^{\Gamma}} \otimes \mathbf{G}_{I_{ij}^{ab,\Gamma}} + \mathbf{G}_{I_{ij}^{ab,\Gamma}} \otimes \mathbf{G}_{I_0^{\Gamma}}\right) \\ &+ \sum_{\substack{(i,a)\\(j,b)}} \mathcal{D}_{ij}^{ab,\Gamma\Gamma}\mathbf{G}_{I_i^{a,\Gamma}} \otimes \mathbf{G}_{I_j^{b,\Gamma}}\end{aligned}$$

$$\begin{aligned}\mathcal{H}^{\Gamma} =& C_0 F_{I_0^{\Gamma}}\tilde{\mathbf{H}}_{I_0^{\Gamma}} \\ &+ \sum_{(i,a)\in\Gamma} \bar{C}_i^{a,\Gamma}\left(F_{I_0^{\Gamma}}\tilde{\mathbf{H}}_{I_i^{a,\Gamma}} + F_{I_i^{a,\Gamma}}\tilde{\mathbf{H}}_{I_0^{\Gamma}}\right) \\ &+ \sum_{\substack{(i>j)\\(a>b)}} C_{ij}^{ab,\Gamma}\left(F_{I_0^{\Gamma}}\tilde{\mathbf{H}}_{I_{ij}^{ab,\Gamma}} + F_{I_{ij}^{ab,\Gamma}}\tilde{\mathbf{H}}_{I_0^{\Gamma}}\right) \\ &+ \sum_{\substack{(i,a)\\(j,b)}} \mathcal{D}_{ij}^{ab,\Gamma\Gamma} F_{I_i^{a,\Gamma}}\tilde{\mathbf{H}}_{I_j^{b,\Gamma}}\end{aligned}$$

$$\mathcal{J}_\Gamma = \Pi_{U^\Gamma\perp}\left\{\mathcal{F}_0^\Gamma\mathcal{M}^\Gamma + \left(\sum_{\bar\Gamma\neq\Gamma}\mathcal{F}_0^{\Gamma\bar\Gamma}\mathcal{L}^{\bar\Gamma} + \sum_{\substack{\bar{\bar\Gamma}>\bar\Gamma}}\mathcal{F}_0^{\Gamma\bar\Gamma\bar{\bar\Gamma}}\mathcal{K}^{\bar\Gamma\bar{\bar\Gamma}}\right)F_{I_0^\Gamma}\mathbf{G}_{I_0^\Gamma}\right\}$$

$$\mathcal{H}_\Gamma^\Gamma = \left(\Pi_{U^\Gamma\perp}\otimes\mathbb{1}\right)\left\{\mathcal{F}_0^\Gamma\left(\mathcal{H}^\Gamma + \left(\mathbb{1}\otimes\Pi_{U^\Gamma\perp}\right)\mathcal{G}^\Gamma\right)\right.$$

$$\left.+\left(\sum_{\bar\Gamma\neq\Gamma}\mathcal{F}_0^{\Gamma\bar\Gamma}\mathcal{L}^{\bar\Gamma} + \sum_{\substack{\bar{\bar\Gamma}>\bar\Gamma\\ \bar\Gamma\neq\Gamma}}\mathcal{F}_0^{\Gamma\bar\Gamma\bar{\bar\Gamma}}\mathcal{K}^{\bar\Gamma\bar{\bar\Gamma}}\right)\left(F_{I_0^\Gamma}\tilde{\mathbf{H}}_{I_0^\Gamma} + \mathbf{G}_{I_0^\Gamma}\otimes\left(\Pi_{U^\Gamma\perp}\mathbf{G}_{I_0^\Gamma}\right)\right)\right\}$$

$$\mathcal{H}_\Gamma^{\Gamma'} = 2\left(\Pi_{U^\Gamma\perp}\otimes\Pi_{U^{\Gamma'}\perp}\right)\left\{\mathcal{F}_0^{\Gamma\Gamma'}\left\{F_{I_0^{\Gamma'}}\mathcal{M}^\Gamma\otimes\mathbf{G}_{I_0^{\Gamma'}} + F_{I_0^\Gamma}\mathbf{G}_{I_0^\Gamma}\otimes\mathcal{M}^{\Gamma'} + \frac{1}{2}\sum_{\substack{(i,a)\in\Gamma\\(j,b)\in\Gamma'}}\mathcal{D}_{ij}^{ab,\Gamma'}\hat{\mathbf{G}}_{ia}^\Gamma\otimes\hat{\mathbf{G}}_{jb}^{\Gamma'}\right.\right.$$

$$\left.-\left(\sum_{(i,a)\in\Gamma}\hat{\mathbf{G}}_{ia}^\Gamma\sum_{(j,b)\in\Gamma'}F_{I_j^{b,\Gamma'}}\mathcal{D}_{ij}^{ab,\Gamma\Gamma'}\right)\otimes\mathbf{G}_{I_0^{\Gamma'}} - \mathbf{G}_{I_0^\Gamma}\otimes\left(\sum_{(j,b)\in\Gamma'}\hat{\mathbf{G}}_{jb}^{\Gamma'}\sum_{(i,a)\in\Gamma}F_{I_i^{a,\Gamma}}\mathcal{D}_{ij}^{ab,\Gamma\Gamma'}\right)\right\}$$

$$\left.+\left(-C_0\mathcal{F}_0^{\Gamma\Gamma'} + \sum_{\bar\Gamma\neq\Gamma,\Gamma'}\mathcal{F}_0^{\Gamma\Gamma'\bar\Gamma}\mathcal{L}^{\bar\Gamma} + \sum_{\substack{\bar{\bar\Gamma}>\bar\Gamma\\ \overline{\bar{\bar\Gamma}\neq\Gamma,\Gamma'}}}\mathcal{F}_0^{\Gamma\Gamma'\bar\Gamma\bar{\bar\Gamma}}\mathcal{K}^{\bar\Gamma\bar{\bar\Gamma}}\right)F_{I_0^\Gamma}F_{I_0^{\Gamma'}}\mathbf{G}_{I_0^\Gamma}\otimes\mathbf{G}_{I_0^{\Gamma'}}\right\}$$

$$F_{I_i^a} = (-1)^{i+n}\sum_{q=1}^{n}U_q^a\left(\mathbf{G}_{I_0}\right)_q^i$$

$$F_{I_{ij}^{ab}} = (-1)^{i+n+(b>a)}\sum_{q=1}^{n}U_q^a\left(\mathbf{G}_{I_j^b}\right)_q^i$$

$$\left(\mathbf{G}_{I_i^a}\right)_q^p = \begin{cases}(-1)^{i+n}\sum_{q'=1}^{n}\left(1-\delta_{qq'}\right)U_{q'}^a\left(\mathbf{H}_{I_0}\right)_{qq'}^{pi} & p\neq a\\ (-1)^{i+n}\left(\mathbf{G}_{I_0}\right)_q^i & p=a\end{cases}$$

$$|\Psi\rangle = \sum_\mu|\Phi_\mu\rangle C_\mu$$

$$1 = \langle\Psi\mid\Psi\rangle = \sum_\mu\langle\Psi\mid\Phi_\mu\rangle\langle\Phi_\mu\mid\Psi\rangle = \sum_\mu|C_\mu|^2,$$

$$|\Psi\rangle = \mathrm{e}^{\hat T}|\Phi_0\rangle,$$

$$\hat T = \sum_\mu\tau_\mu\hat X_\mu$$

$$E = \langle\Phi_0|\hat H\left(1+\hat T_1+\hat T_2+\frac{1}{2}\hat T_1^2\right)|\Phi_0\rangle$$

$$\hat T = \sum_{i=1}^{N}\hat T_i = \sum_{i=1}^{N}\sum_{\mu_i}\tau_{\mu_i}\hat X_{\mu_i}$$

$$\langle \hat{O} \rangle = \frac{1}{2}\langle \tilde{\Psi}|\hat{O}|\Psi\rangle + \frac{1}{2}\langle \tilde{\Psi}|\hat{O}^{\dagger}|\Psi\rangle^{*},$$

$$W_{\mu} = \langle \hat{P}_{\mu} \rangle = \langle \tilde{\Psi}|\hat{P}_{\mu}|\Psi\rangle = \tilde{c}_{\mu} c_{\mu}$$

$$\tilde{c}_{\mu} = \langle \tilde{\Psi} \mid \Phi_{\mu} \rangle, c_{\mu} = \langle \Phi_{\mu} \mid \Psi \rangle.$$

$$\sum_{\mu} W_{\mu} = \langle \tilde{\Psi} \mid \Psi \rangle = 1$$

$$W_{\mu} \leftarrow \langle \tilde{\Psi}|\hat{S}\hat{P}_{\mu}\hat{S}^{-1}|\Psi\rangle,$$

$$W_1 = \sum_{\mu_1} W_{\mu_1} = \langle \hat{P}_1 \rangle,$$
$$W_2 = \sum_{\mu_2} W_{\mu_2} = \langle \hat{P}_2 \rangle,$$

$$\hat{P}_0 = \hat{P}_0^A \hat{P}_0^B$$
$$\hat{P}_1 = \hat{P}_1^A \hat{P}_0^B + \hat{P}_0^A \hat{P}_1^B + \hat{P}_1^{AB}$$
$$\hat{P}_2 = \hat{P}_2^A \hat{P}_0^B + \hat{P}_0^A \hat{P}_2^B + \hat{P}_1^A \hat{P}_1^B + \hat{P}_2^{AB}$$

$$W_0 = W_0^A W_0^B$$
$$W_1 = W_1^A W_0^B + W_0^A W_1^B$$
$$W_2 = W_2^A W_0^B + W_0^A W_2^B + W_1^A W_1^B$$

$$\langle \tilde{\Psi}| = \langle \Phi_0|(1 + \hat{\Lambda})\mathrm{e}^{-\hat{T}}$$

$$\hat{\Lambda} = \sum_{\mu} \lambda_{\mu} \hat{X}_{\mu}^{\dagger}$$

$$\mathcal{L} = \langle \tilde{\Psi}|\hat{H}|\Psi\rangle,$$

$$\langle \Phi_{\mu}|\mathrm{e}^{-\hat{T}}\hat{H}\mathrm{e}^{\hat{T}}|\Phi_0\rangle = 0,$$
$$\langle \tilde{\Psi}|[\hat{H}, \hat{X}_{\mu}]|\Psi\rangle = 0,$$

$$\langle \tilde{\Psi}| = \sum_{\mu} \tilde{c}_{\mu}\langle \Phi_{\mu}|, |\Psi\rangle = \sum_{\mu} |\Phi_{\mu}\rangle c_{\mu}$$

$$\langle \hat{O} \rangle = \mathrm{Re} \sum_{\mu\nu} \tilde{c}_{\mu}\langle \Phi_{\mu}|\hat{O}|\Phi_{\nu}\rangle c_{\nu}$$

$$W_0 = 1 - \langle \Phi_0|\hat{\Lambda}_1 \hat{T}_1|\Phi_0\rangle$$
$$W_{\mu_1} = \langle \Phi_0|\hat{\Lambda}_1|\Phi_{\mu_1}\rangle\langle \Phi_{\mu_1}|\hat{T}_1|\Phi_0\rangle$$

$$W_0 = 1 - \langle\Phi_0|\hat{\Lambda}_1\hat{T}_1|\Phi_0\rangle - \langle\Phi_0|\hat{\Lambda}_2\left(\hat{T}_2 - \frac{1}{2}\hat{T}_1^2\right)|\Phi_0\rangle,$$
$$W_{\mu_1} = \langle\Phi_0|\hat{\Lambda}_1|\Phi_{\mu_1}\rangle\langle\Phi_{\mu_1}|\hat{T}_1|\Phi_0\rangle - \langle\Phi_0|\hat{\Lambda}_2\hat{T}_1|\Phi_{\mu_1}\rangle\langle\Phi_{\mu_1}|\hat{T}_1|\Phi_0\rangle,$$
$$W_{\mu_2} = \langle\Phi_0|\hat{\Lambda}_2|\Phi_{\mu_2}\rangle\langle\Phi_{\mu_2}|\hat{T}_2 + \frac{1}{2}\hat{T}_1^2|\Phi_0\rangle,$$

$$\begin{aligned}
W_0 =& 1 - \langle\Phi_0|\hat{\Lambda}_1\hat{T}_1|\Phi_0\rangle - \langle\Phi_0|\hat{\Lambda}_2\left(\hat{T}_2 - \frac{1}{2}\hat{T}_1^2\right)|\Phi_0\rangle \\
&-\langle\Phi_0|\hat{\Lambda}_3\left(\hat{T}_3 - \hat{T}_1\hat{T}_2 + \frac{1}{6}\hat{T}_1^3\right)|\Phi_0\rangle, \\
W_{\mu_1} =& \langle\Phi_0|\hat{\Lambda}_1|\Phi_{\mu_1}\rangle\langle\Phi_{\mu_1}|\hat{T}_1|\Phi_0\rangle - \langle\Phi_0|\hat{\Lambda}_2\hat{T}_1|\Phi_{\mu_1}\rangle\langle\Phi_{\mu_1}|\hat{T}_1|\Phi_0\rangle \\
&-\langle\Phi_0|\hat{\Lambda}_3\hat{T}_2|\Phi_{\mu_1}\rangle\langle\Phi_{\mu_1}|\hat{T}_1|\Phi_0\rangle + \frac{1}{2}\langle\Phi_0|\hat{\Lambda}_3\hat{T}_1^2|\Phi_{\mu_1}\rangle\langle\Phi_{\mu_1}|\hat{T}_1|\Phi_0\rangle, \\
W_{\mu_2} =& \langle\Phi_0|\hat{\Lambda}_2|\Phi_{\mu_2}\rangle\langle\Phi_{\mu_2}|\hat{T}_2 + \frac{1}{2}\hat{T}_1^2|\Phi_0\rangle - \langle\Phi_0|\hat{\Lambda}_3\hat{T}_1|\Phi_{\mu_2}\rangle\langle\Phi_{\mu_2}|\hat{T}_2 + \frac{1}{2}\hat{T}_1^2|\Phi_0\rangle, \\
W_{\mu_3} =& \langle\Phi_0|\hat{\Lambda}_3|\Phi_{\mu_3}\rangle\langle\Phi_{\mu_3}|\hat{T}_3 + \hat{T}_1\hat{T}_2 + \frac{1}{6}\hat{T}_1^3|\Phi_0\rangle.
\end{aligned}$$

$$\langle\hat{O}\rangle = \frac{\langle\Psi|\hat{O}|\Psi\rangle}{\langle\Psi \mid \Psi\rangle} \text{ or } \langle\hat{O}\rangle = \frac{\langle\tilde{\Psi}|\hat{O}|\tilde{\Psi}\rangle}{\langle\tilde{\Psi} \mid \tilde{\Psi}\rangle}$$

$$\frac{\langle\Psi|\hat{H}|\Psi\rangle}{\langle\Psi \mid \Psi\rangle} = E + \sum_{\mu}{}' \frac{\langle\Psi|\hat{X}_\mu|\Psi\rangle}{\langle\Psi \mid \Psi\rangle}\langle\Phi_\mu|\mathrm{e}^{-\hat{T}}\hat{H}\mathrm{e}^{\hat{T}}|\Phi_0\rangle$$
$$\frac{\langle\tilde{\Psi}|\hat{H}|\tilde{\Psi}\rangle}{\langle\tilde{\Psi} \mid \tilde{\Psi}\rangle} = E + \sum_{\mu}{}' \frac{\langle\tilde{\Psi}|[\hat{H}, \hat{X}_\mu]|\Psi\rangle}{\langle\tilde{\Psi} \mid \tilde{\Psi}\rangle}\langle\Phi_\mu|\mathrm{e}^{-\hat{T}}|\tilde{\Psi}\rangle$$
$$\langle\tilde{\Psi}|\hat{H}|\Psi\rangle = E$$

$$\frac{\langle\Psi|\hat{P}_0|\Psi\rangle}{\langle\Psi \mid \Psi\rangle} = 1 - \sum_i \langle\Phi_0|\hat{T}_i^\dagger\hat{T}_i|\Phi_0\rangle + \mathcal{O}(\tau^3)$$
$$\frac{\langle\Psi|\hat{P}_{\mu_i}|\Psi\rangle}{\langle\Psi \mid \Psi\rangle} = \langle\Phi_0|\hat{T}_i^\dagger|\Phi_{\mu_i}\rangle\langle\Phi_{\mu_i}|\hat{T}_i|\Phi_0\rangle + \mathcal{O}(\tau^3)$$
$$\frac{\langle\tilde{\Psi}|\hat{P}_0|\tilde{\Psi}\rangle}{\langle\tilde{\Psi} \mid \tilde{\Psi}\rangle} = 1 - \sum_i \langle\Phi_0|\hat{\Lambda}_i\hat{\Lambda}_i^\dagger|\Phi_0\rangle + \mathcal{O}(z^3)$$
$$\frac{\langle\tilde{\Psi}|\hat{P}_{\mu_i}|\tilde{\Psi}\rangle}{\langle\tilde{\Psi} \mid \tilde{\Psi}\rangle} = \langle\Phi_0|\hat{\Lambda}_i|\Phi_{\mu_i}\rangle\langle\Phi_{\mu_i}|\hat{\Lambda}_i^\dagger|\Phi_0\rangle + \mathcal{O}(z^3)$$
$$\langle\tilde{\Psi}|\hat{P}_0|\Psi\rangle = 1 - \sum_i \langle\Phi_0|\hat{\Lambda}_i\hat{T}_i|\Phi_0\rangle + \mathcal{O}(z^3)$$
$$\langle\tilde{\Psi}|\hat{P}_{\mu_i}|\Psi\rangle = \langle\Phi_0|\hat{\Lambda}_i|\Phi_{\mu_i}\rangle\langle\Phi_{\mu_i}|\hat{T}_i|\Phi_0\rangle + \mathcal{O}(z^3)$$

$$\mathcal{L} = \langle\Phi_0|(1 + \hat{\Lambda}_1)(H + [H, \hat{T}_2])|\Phi_0\rangle + \langle\Phi_0|\hat{\Lambda}_2(H + [F, \hat{T}_2])|\Phi_0\rangle$$

$$O = \mathrm{e}^{-\hat{T}_1}\hat{O}\mathrm{e}^{\hat{T}_1}$$

$$\mathcal{L}= \langle\Phi_0|H+[H,\hat{T}_2]|\Phi_0\rangle + \langle\Phi_0|\hat{\Lambda}_1\big(H+[H,\hat{T}_2]+[H,\hat{T}_3]\big)|\Phi_0\rangle$$
$$+\langle\Phi_0|\hat{\Lambda}_2\left(H+[H,\hat{T}_2]+\frac{1}{2}\Big[[H,\hat{T}_2],\hat{T}_2\Big]+[H,\hat{T}_3]\right)|\Phi_0\rangle$$
$$+\langle\Phi_0|\hat{\Lambda}_3\big([H,\hat{T}_2]+[F,\hat{T}_3]\big)|\Phi_0\rangle$$

$$W_0 = 1-\langle\Phi_0|\hat{\Lambda}_1\hat{T}_1|\Phi_0\rangle - \langle\Phi_0|\hat{\Lambda}_2\left(\hat{T}_2-\frac{1}{2}\hat{T}_1^2\right)|\Phi_0\rangle - \langle\Phi_0|\hat{\Lambda}_3\big(\hat{T}_3-\hat{T}_1\hat{T}_2\big)|\Phi_0\rangle,$$
$$W_{\mu_1} = \langle\Phi_0|\hat{\Lambda}_1|\Phi_{\mu_1}\rangle\langle\Phi_{\mu_1}|\hat{T}_1|\Phi_0\rangle - \langle\Phi_0|\hat{\Lambda}_2\hat{T}_1|\Phi_{\mu_1}\rangle\langle\Phi_{\mu_1}|\hat{T}_1|\Phi_0\rangle$$
$$-\langle\Phi_0|\hat{\Lambda}_3\hat{T}_2|\Phi_{\mu_1}\rangle\langle\Phi_{\mu_1}|\hat{T}_1|\Phi_0\rangle$$
$$W_{\mu_2} = \langle\Phi_0|\hat{\Lambda}_2|\Phi_{\mu_2}\rangle\langle\Phi_{\mu_2}|\hat{T}_2+\frac{1}{2}\hat{T}_1^2|\Phi_0\rangle - \langle\Phi_0|\hat{\Lambda}_3\hat{T}_1|\Phi_{\mu_2}\rangle\langle\Phi_{\mu_2}|\hat{T}_2|\Phi_0\rangle$$
$$W_{\mu_3} = \langle\Phi_0|\hat{\Lambda}_3|\Phi_{\mu_3}\rangle\langle\Phi_{\mu_3}|\hat{T}_3+\hat{T}_1\hat{T}_2|\Phi_0\rangle$$

$$\mathcal{L} = \langle\Phi_0|\hat{H}+[\hat{H},\hat{T}_2]|\Phi_0\rangle + \langle\Phi_0|\hat{\Lambda}_2\big(\hat{H}+[\hat{F},\hat{T}_2]\big)|\Phi_0\rangle$$

$$W_0 = 1-\langle\Phi_0|\hat{\Lambda}_2\hat{T}_2|\Phi_0\rangle$$
$$W_{\mu_2} = \langle\Phi_0|\hat{\Lambda}_2|\Phi_{\mu_2}\rangle\langle\Phi_{\mu_2}|\hat{T}_2|\Phi_0\rangle$$

$$\mathcal{L}= \langle\Phi_0|\big(1+\hat{\Lambda}_1+\hat{\Lambda}_2\big)\mathrm{e}^{-\hat{T}_1-\hat{T}_2}\hat{H}\mathrm{e}^{\hat{T}_1+\hat{T}_2}|\Phi_0\rangle + \sum_{i=1}^{2}\sum_{\mu_i}\tau_{\mu_i}\langle\Phi_{\mu_i}|[\hat{H},\hat{T}_3]|\Phi_0\rangle$$
$$+\langle\Phi_0|\hat{\Lambda}_3\big([\hat{F},\hat{T}_3]+[\hat{H},\hat{T}_2]\big)|\Phi_0\rangle$$

$$W_0 = 1-\langle\Phi_0|\hat{\Lambda}_1\hat{T}_1|\Phi_0\rangle - \langle\Phi_0|\hat{\Lambda}_2\left(\hat{T}_2-\frac{1}{2}\hat{T}_1^2\right)|\Phi_0\rangle - \langle\Phi_0|\hat{\Lambda}_3\hat{T}_3|\Phi_0\rangle$$
$$W_{\mu_1} = \langle\Phi_0|\hat{\Lambda}_1|\Phi_{\mu_1}\rangle\langle\Phi_{\mu_1}|\hat{T}_1|\Phi_0\rangle - \langle\Phi_0|\hat{\Lambda}_2\hat{T}_1|\Phi_{\mu_1}\rangle\langle\Phi_{\mu_1}|\hat{T}_1|\Phi_0\rangle$$
$$W_{\mu_2} = \langle\Phi_0|\hat{\Lambda}_2|\Phi_{\mu_2}\rangle\langle\Phi_{\mu_2}|\hat{T}_2+\frac{1}{2}\hat{T}_1^2|\Phi_0\rangle$$
$$W_{\mu_3} = \langle\Phi_0|\hat{\Lambda}_3|\Phi_{\mu_3}\rangle\langle\Phi_{\mu_3}|\hat{T}_3|\Phi_0\rangle$$

$$\hat{\kappa} = \sum_{\mu_1}\left(\kappa_{\mu_1}^{e}\hat{X}_{\mu_1}+\kappa_{\mu_1}^{d}\hat{X}_{\mu_1}^{\dagger}\right)$$

$$|\Psi\rangle = \mathrm{e}^{\hat{\kappa}}\mathrm{e}^{\hat{T}}|\Phi_0\rangle$$
$$\langle\tilde{\Psi}| = \langle\Phi_0|(1+\hat{\Lambda})\mathrm{e}^{-\hat{T}}\mathrm{e}^{-\hat{\kappa}}$$

$$|\Psi\rangle = \mathrm{e}^{\hat{T}}|\Phi_0\rangle$$
$$\langle\tilde{\Psi}| = \langle\Phi_0|\mathrm{e}^{\hat{\Sigma}}\mathrm{e}^{-\hat{T}}$$

$$\langle\tilde{\Psi}| \leftarrow \langle\Phi_0|\left(1+\hat{\Sigma}+\frac{1}{2}\hat{\Sigma}^2\right)\mathrm{e}^{-\hat{T}}.$$

$$
\begin{aligned}
W_0 &= 1 - \langle\Phi_0|\hat{\Sigma}_1\hat{T}_1|\Phi_0\rangle - \langle\Phi_0|\left(\hat{\Sigma}_2 + \frac{1}{2}\hat{\Sigma}_1^2\right)\left(\hat{T}_2 - \frac{1}{2}\hat{T}_1^2\right)|\Phi_0\rangle \\
&\quad -\langle\Phi_0|\hat{\Sigma}_1\hat{\Sigma}_2\left(\frac{1}{6}\hat{T}_1^3 - \hat{T}_1\hat{T}_2\right)|\Phi_0\rangle + \frac{1}{4}\langle\Phi_0|\hat{\Sigma}_2^2\left(\hat{T}_2^2 - \hat{T}_1^2\hat{T}_2 + \frac{1}{12}\hat{T}_1^4\right)|\Phi_0\rangle \\
W_{\mu_1} &= \langle\Phi_0|\hat{\Sigma}_1|\Phi_{\mu_1}\rangle\langle\Phi_{\mu_1}|\hat{T}_1|\Phi_0\rangle - \langle\Phi_0|\left(\hat{\Sigma}_2 + \frac{1}{2}\hat{\Sigma}_1^2\right)\hat{T}_1|\Phi_{\mu_1}\rangle\langle\Phi_{\mu_1}|\hat{T}_1|\Phi_0\rangle \\
&\quad -\langle\Phi_0|\hat{\Sigma}_1\hat{\Sigma}_2\left(\hat{T}_2 - \frac{1}{2}\hat{T}_1^2\right)|\Phi_{\mu_1}\rangle\langle\Phi_{\mu_1}|\hat{T}_1|\Phi_0\rangle \\
&\quad -\frac{1}{2}\langle\Phi_0|\hat{\Sigma}_2^2\left(\frac{1}{6}\hat{T}_1^3 - \hat{T}_1\hat{T}_2\right)|\Phi_{\mu_1}\rangle\langle\Phi_{\mu_1}|\hat{T}_1|\Phi_0\rangle \\
W_{\mu_2} &= \langle\Phi_0|\hat{\Sigma}_2 + \frac{1}{2}\hat{\Sigma}_1^2|\Phi_{\mu_2}\rangle\langle\Phi_{\mu_2}|\hat{T}_2 + \frac{1}{2}\hat{T}_1^2|\Phi_0\rangle - \langle\Phi_0|\hat{\Sigma}_1\hat{\Sigma}_2\hat{T}_1|\Phi_{\mu_2}\rangle\langle\Phi_{\mu_2}|\hat{T}_2 + \frac{1}{2}\hat{T}_1^2|\Phi_0\rangle \\
&\quad -\frac{1}{2}\langle\Phi_0|\hat{\Sigma}_2^2\left(\hat{T}_2 - \frac{1}{2}\hat{T}_1^2\right)|\Phi_{\mu_2}\rangle\langle\Phi_{\mu_2}|\hat{T}_2 + \frac{1}{2}\hat{T}_1^2|\Phi_0\rangle \\
W_{\mu_3} &= \langle\Phi_0|\hat{\Sigma}_1\hat{\Sigma}_2|\Phi_{\mu_3}\rangle\langle\Phi_{\mu_3}|\hat{T}_1\hat{T}_2 + \frac{1}{6}\hat{T}_1^3|\Phi_0\rangle - \frac{1}{2}\langle\Phi_0|\hat{\Sigma}_2^2\hat{T}_1|\Phi_{\mu_3}\rangle\langle\Phi_{\mu_3}|\hat{T}_1\hat{T}_2 + \frac{1}{6}\hat{T}_1^3|\Phi_0\rangle \\
W_{\mu_4} &= \frac{1}{4}\langle\Phi_0|\hat{\Sigma}_2^2|\Phi_{\mu_4}\rangle\langle\Phi_{\mu_4}|\hat{T}_2^2 + \hat{T}_1^2\hat{T}_2 + \frac{1}{12}\hat{T}_1^4|\Phi_0\rangle
\end{aligned}
$$

$$
\hat{T} = \hat{T}_1 + \hat{T}_2 + \hat{T}_3, \hat{\Lambda} = \hat{\Lambda}_1 + \hat{\Lambda}_2 + \hat{\Lambda}_3
$$

$$
\hat{T}_1 = \sum_{ia} \tau_i^a \hat{a}_a^\dagger \hat{a}_i, \quad \hat{T}_2 = \frac{1}{4}\sum_{ijab} \tau_{ij}^{ab} \hat{a}_a^\dagger \hat{a}_i \hat{a}_b^\dagger \hat{a}_j, \quad \hat{T}_3 = \frac{1}{36}\sum_{ijkabc} \tau_{ijk}^{abc} \hat{a}_a^\dagger \hat{a}_i \hat{a}_b^\dagger \hat{a}_j \hat{a}_c^\dagger \hat{a}_k
$$

$$
\hat{\Lambda}_1 = \sum_{ia} \lambda_a^i \hat{a}_i^\dagger \hat{a}_a, \quad \hat{\Lambda}_2 = \frac{1}{4}\sum_{ijab} \lambda_{ab}^{ij} \hat{a}_j^\dagger \hat{a}_b \hat{a}_i^\dagger \hat{a}_a, \quad \hat{\Lambda}_3 = \frac{1}{36}\sum_{ijkabc} \lambda_{abc}^{ijk} \hat{a}_k^\dagger \hat{a}_c \hat{a}_j^\dagger \hat{a}_b \hat{a}_i^\dagger \hat{a}_a
$$

$$
\begin{aligned}
c_0 &= 1 \\
c_i^a &= \tau_i^a \\
c_{ij}^{ab} &= \tau_{ij}^{ab} + \tau_i^a\tau_j^b - \tau_i^b\tau_j^a \\
c_{ijk}^{abc} &= \tau_{ijk}^{abc} + \tau_i^a\tau_{jk}^{bc} + \tau_k^a\tau_{ij}^{bc} - \tau_j^a\tau_{ik}^{bc} + \tau_j^b\tau_{ik}^{ac} - \tau_i^b\tau_{jk}^{ac} - \tau_k^b\tau_{ij}^{ac} \\
&+\tau_i^c\tau_{jk}^{ab} + \tau_k^c\tau_{ij}^{ab} - \tau_j^c\tau_{ik}^{ab} + \tau_i^a\tau_j^b\tau_k^c - \tau_i^a\tau_k^b\tau_j^c + \tau_j^a\tau_k^b\tau_i^c - \tau_j^a\tau_i^b\tau_k^c + \tau_k^a\tau_i^b\tau_j^c - \tau_k^a\tau_j^b\tau_i^c
\end{aligned}
$$

$$
\begin{aligned}
\tilde{c}_0 &= 1 - \sum_{ia} \lambda_a^i \tau_i^a - \frac{1}{4}\sum_{ijab} \lambda_{ab}^{ij} \tau_{ij}^{ab} + \frac{1}{2}\sum_{ijab} \lambda_{ab}^{ij} \tau_i^a \tau_j^b \\
&\quad -\frac{1}{36}\sum_{ijkabc} \lambda_{abc}^{ijk} \tau_{ijk}^{abc} + \frac{1}{4}\sum_{ijkabc} \lambda_{abc}^{ijk} \tau_{ij}^{ab} \tau_k^c - \frac{1}{6}\sum_{ijkabc} \lambda_{abc}^{ijk} \tau_i^a \tau_j^b \tau_k^c, \\
\tilde{c}_a^i &= \lambda_a^i - \sum_{jb} \lambda_{ab}^{ij} \tau_j^b - \frac{1}{4}\sum_{jkbc} \lambda_{abc}^{ijk} \tau_{jk}^{bc} + \frac{1}{2}\sum_{jkbc} \lambda_{abc}^{ijk} \tau_j^b \tau_k^c, \\
\tilde{c}_{ab}^{ij} &= \lambda_{ab}^{ij} - \sum_{kc} \lambda_{abc}^{ijk} \tau_k^c, \\
\tilde{c}_{abc}^{ijk} &= \lambda_{abc}^{ijk}.
\end{aligned}
$$

$$
\Psi_{\text{Laughlin}}^m(z_1, \dots, z_N) = \prod_{i<j}^{N} \left(z_i - z_j\right)^{2m+1} e^{-\frac{1}{2}\sum_{i=1}^{N} |z_i|^2}
$$

$$\Phi(z) = \sum_{k=0}^{\infty} a_k \phi_k(z)$$

$$\{a_k, a_l^\dagger\} = \delta_{kl}$$

$$| [\lambda] > \equiv | [\lambda_1, \lambda_2, \dots, \lambda_N] >$$
$$\equiv a_{\lambda_1}^\dagger a_{\lambda_2}^\dagger \dots a_{\lambda_N}^\dagger | 0 >$$

$$\Psi^{[\lambda]}(z_1, \dots, z_N) \equiv \frac{1}{\sqrt{N!}} < 0 | \Phi(z_1) \dots \Phi(z_N) | [\lambda] >$$
$$= \frac{1}{\sqrt{N!}} \begin{vmatrix} \phi_{\lambda_1}(z_1) & \phi_{\lambda_2}(z_1) & \dots & \phi_{\lambda_N}(z_1) \\ \phi_{\lambda_1}(z_2) & \phi_{\lambda_2}(z_2) & \dots & \phi_{\lambda_N}(z_2) \\ \vdots & \vdots & & \vdots \\ \phi_{\lambda_1}(z_N) & \phi_{\lambda_2}(z_N) & \dots & \phi_{\lambda_N}(z_N) \end{vmatrix}$$

$$< [\lambda] | [\mu] > = \delta_{[\lambda]}, [\mu]$$

$$\rho(z) = \Phi^\dagger(z) \Phi(z)$$

$$N = \int d^2 z \rho(z)$$

$$< [\lambda] | \rho(z) | [\lambda] > = \sum_{i=1}^{N} \left| \phi_{\lambda_i}(z) \right|^2$$

$$| \text{ state } > = \sum_{[\lambda]} c_{[\lambda]} | [\lambda] >$$

$$\langle \text{state} | \rho(z) | \text{ state } \rangle = \sum_{[\lambda]} \left| c_{[\lambda]} \right|^2 \langle [\lambda] | \rho(z) | [\lambda] \rangle$$
$$= \sum_{[\lambda]} \left| c_{[\lambda]} \right|^2 \left(\sum_{i=1}^{N} \left| \phi_{\lambda_i}(z) \right|^2 \right)$$

$$\left| L > = \sum_{[\lambda]} c_{[\lambda]} \right| [\lambda] >$$

$$\phi_k(z) = \frac{1}{\sqrt{\pi k!}} z^k e^{-\frac{1}{2}|z|^2}$$

$$\Psi_{\text{Slater}}^{[\lambda]}(z_1, z_2, \dots z_N) = \frac{e^{-\frac{1}{2}\sum_{i=1}^{N} |z_i|^2}}{\sqrt{N! \, \pi^N \prod_{i=1}^{N} \lambda_i!}} \begin{vmatrix} z_1^{\lambda_1} & z_1^{\lambda_2} & \dots & z_1^{\lambda_N} \\ z_2^{\lambda_1} & z_2^{\lambda_2} & \dots & z_2^{\lambda_N} \\ \vdots & \vdots & & \vdots \\ z_N^{\lambda_1} & z_N^{\lambda_2} & \dots & z_N^{\lambda_N} \end{vmatrix}$$

$$\lambda_i = \mu_i + N - i$$

$$\psi_{\text{Slater}}^{\{\mu\}}(z_1,\dots,z_N)=\begin{vmatrix} z_1^{\mu_1+N-1} & z_1^{\mu_2+N-2} & \dots & z_1^{\mu_N} \\ z_2^{\mu_1+N-1} & z_2^{\mu_2+N-2} & \dots & z_2^{\mu_N} \\ \vdots & \vdots & & \vdots \\ z_N^{\mu_1+N-1} & z_N^{\mu_2+N-2} & \dots & z_N^{\mu_N} \end{vmatrix}$$

$$\psi_{\text{Laughlin}}(z_1,\dots,z_N)=\left(\prod_{i<j}^{N}(z_i-z_j)\right)^{2m+1}$$

$$J_{\text{Laughlin}}=(2m+1)\frac{1}{2}N(N-1)$$

$$\sum_{i=1}^{N}\mu_i=mN(N-1)$$

$$\begin{aligned}\psi_{\text{Laughlin}}(z_1,z_2)&=\left(\begin{vmatrix} z_1 & 1 \\ z_2 & 1 \end{vmatrix}\right)^3 \\ &=\begin{vmatrix} z_1^3 & 1 \\ z_2^3 & 1 \end{vmatrix}-3\begin{vmatrix} z_1^2 & z_1 \\ z_2^2 & z_2 \end{vmatrix} \\ &=\psi_{\text{Slater}}^{\{2\}}(z_1,z_2)-3\psi_{\text{Slater}}^{\{1,1\}}(z_1,z_2)\end{aligned}$$

$$\begin{aligned}\psi_{\text{Laughlin}}(z_1,z_2)&=\left(\begin{vmatrix} z_1 & 1 \\ z_2 & 1 \end{vmatrix}\right)^5 \\ &=\begin{vmatrix} z_1^5 & 1 \\ z_2^5 & 1 \end{vmatrix}-5\begin{vmatrix} z_1^4 & z_1 \\ z_2^4 & z_2 \end{vmatrix}+10\begin{vmatrix} z_1^3 & z_1^2 \\ z_2^3 & z_2^2 \end{vmatrix} \\ &=\psi_{\text{Slater}}^{\{4\}}(z_1,z_2)-5\psi_{\text{Slater}}^{\{3,1\}}(z_1,z_2)+10\psi_{\text{Slater}}^{\{2,2\}}(z_1,z_2)\end{aligned}$$

$$\begin{aligned}\psi_{\text{Laughlin}}(z_1,z_2,z_3)&=\left(\begin{vmatrix} z_1^2 & z_1 & 1 \\ z_2^2 & z_2 & 1 \\ z_3^2 & z_3 & 1 \end{vmatrix}\right)^3 \\ &=\begin{vmatrix} z_1^6 & z_1^3 & 1 \\ z_2^6 & z_2^3 & 1 \\ z_3^6 & z_3^3 & 1 \end{vmatrix}-3\begin{vmatrix} z_1^6 & z_1^2 & z_1 \\ z_2^6 & z_2^2 & z_2 \\ z_3^6 & z_3^2 & z_3 \end{vmatrix}-3\begin{vmatrix} z_1^5 & z_1^4 & 1 \\ z_2^5 & z_2^4 & 1 \\ z_3^5 & z_3^4 & 1 \end{vmatrix} \\ &\quad+6\begin{vmatrix} z_1^5 & z_1^3 & z_1 \\ z_2^5 & z_2^3 & z_2 \\ z_3^5 & z_3^3 & z_3 \end{vmatrix}-15\begin{vmatrix} z_1^4 & z_1^3 & z_1^2 \\ z_2^4 & z_2^3 & z_2^2 \\ z_3^4 & z_3^3 & z_3^2 \end{vmatrix} \\ &=\psi_{\text{Slater}}^{\{4,2\}}(z_1,z_2,z_3)-3\psi_{\text{Slater}}^{\{4,1,1\}}(z_1,z_2,z_3)-3\psi_{\text{Slater}}^{\{3,3\}}(z_1,z_2,z_3) \\ &\quad+6\psi_{\text{Slater}}^{\{3,2,1\}}(z_1,z_2,z_3)-15\psi_{\text{Slater}}^{\{2,2,2\}}(z_1,z_2,z_3)\end{aligned}$$

$$\psi_{\text{Laughlin}}=\sum_{\{\mu\}}a_{\{\mu\}}\psi_{\text{Slater}}^{\{\mu\}}$$

$$V=\begin{vmatrix} z_1^{N-1} & z_1^{N-2} & \dots & 1 \\ z_2^{N-1} & z_2^{N-2} & \dots & 1 \\ \vdots & \vdots & & \vdots \\ z_N^{N-1} & z_N^{N-2} & \dots & 1 \end{vmatrix}$$

$$=\prod_{i<j}^{N}\left(z_i-z_j\right)$$

$$\mathcal{S}^{\{\mu\}}(z_1,\dots,z_N)\equiv\frac{\begin{vmatrix} z_1^{\mu_1+N-1} & z_1^{\mu_2+N-2} & \dots & z_1^{\mu_N} \\ z_2^{\mu_1+N-1} & z_2^{\mu_2+N-2} & \dots & z_2^{\mu_N} \\ \vdots & \vdots & & \vdots \\ z_N^{\mu_1+N-1} & z_N^{\mu_2+N-2} & \dots & z_N^{\mu_N} \end{vmatrix}}{\begin{vmatrix} z_1^{N-1} & z_1^{N-2} & \dots & 1 \\ z_2^{N-1} & z_2^{N-2} & \dots & 1 \\ \vdots & \vdots & & \vdots \\ z_N^{N-1} & z_N^{N-2} & \dots & 1 \end{vmatrix}}$$

$$\frac{\psi_{\text{Laughlin}}}{V}\equiv V^{2m}$$

$$=\sum_{\{\mu\}}a_{\{\mu\}}\mathcal{S}^{\{\mu\}}$$

$$s_\mu(z_1,\dots,z_N)\equiv\sum_{i=1}^{N}z_i^\mu$$

$$s_{\{\mu\}}\equiv s_{\mu_1}s_{\mu_2}\dots s_{\mu_N}$$

$$s_{\{\mu\}}=\sum_{\{\lambda\}}\chi_{\{\mu\}}^{\{\lambda\}}\mathcal{S}_{\{\lambda\}}$$

$$l_1+2l_2+3l_3+\dots=mN(N-1)$$

$$\frac{1}{(mN(N-1))!}\sum_{(l)}g_{(l)}\chi_{(l)}^{\{\lambda\}}\chi_{(l)}^{\{\lambda'\}}=\delta_{\{\lambda\},\{\lambda'\}}$$

$$\sum_{\{\lambda\}}\chi_{(l)}^{\{\lambda\}}\chi_{(l')}^{\{\lambda\}}=\frac{(mN(N-1))!}{g_{(l)}}\delta_{(l),(l')}$$

$$g_{(l)}\equiv\frac{(mN(N-1))!}{1^{l_1}2^{l_2}\dots l_1!\,l_2!\dots}$$

$$V^2 = \begin{vmatrix} 1 & 1 & \dots & 1 \\ z_1 & z_2 & \dots & z_N \\ \vdots & \vdots & & \vdots \\ z_1^{N-1} & z_2^{N-1} & \dots & z_N^{N-1} \end{vmatrix} \begin{vmatrix} 1 & z_1 & \dots & z_1^{N-1} \\ 1 & z_2 & \dots & z_2^{N-1} \\ \vdots & \vdots & & \vdots \\ 1 & z_N & \dots & z_N^{N-1} \end{vmatrix}$$

$$= \begin{vmatrix} N & s_1 & s_2 & \dots & s_{N-1} \\ s_1 & s_2 & s_3 & \dots & s_N \\ s_2 & s_3 & s_4 & \dots & s_{N+1} \\ \vdots & \vdots & & \vdots & \\ s_{N-1} & s_N & s_{N+1} & \dots & s_{2(N-1)} \end{vmatrix}$$

$$= \sum_{\text{perms. } p} (-1)^p s_{p(1)-1} s_{p(2)} s_{p(3)+1} \cdots s_{p(N)+N-2}$$

$$V^2 = \sum_{\text{perms. } p} (-1)^p s_{\{\mu_p\}}$$

$$\{\mu_p\} \equiv \{p(1)-1, p(2), p(3)+1, \dots, p(N)+N-2\}$$

$$a_{\{\mu\}} = N \sum_{p \text{ s.t. } p(1)=1} (-1)^p \chi_{\{\lambda_p\}}^{\{\mu\}} + \sum_{p \text{ s.t. } p(1)\neq 1} (-1)^p \chi_{\{\lambda_p\}}^{\{\mu\}}$$

$$V^2 = \begin{vmatrix} 2 & s_1 \\ s_1 & s_2 \end{vmatrix}$$
$$= 2s_2 - s_1^2$$
$$\equiv 2s_{\{2\}} - s_{\{1,1\}}$$

$$s_{\{2\}} = \mathcal{S}_{\{2\}} - \mathcal{S}_{\{1,1\}}$$
$$s_{\{1,1\}} = \mathcal{S}_{\{1,1\}} + \mathcal{S}_{\{2\}}$$

$$s_{\{2\}} = z_1^2 + z_2^2$$

$$s_{\{1,1\}} = (z_1 + z_2)^2$$
$$\mathcal{S}_{\{2\}} \equiv \begin{vmatrix} z_1^3 & 1 \\ z_2^3 & 1 \end{vmatrix} \Big/ \begin{vmatrix} z_1 & 1 \\ z_2 & 1 \end{vmatrix}$$
$$= z_1^2 + z_1 z_2 + z_2^2$$
$$\mathcal{S}_{\{1,1\}} \equiv \begin{vmatrix} z_1^2 & z_1 \\ z_2^2 & z_2 \end{vmatrix} \Big/ \begin{vmatrix} z_1 & 1 \\ z_2 & 1 \end{vmatrix}$$
$$= z_1 z_2$$

$$V^2 = \mathcal{S}_{\{2\}} - 3\mathcal{S}_{\{1,1\}}$$

$$V^2 = \begin{vmatrix} 3 & s_1 & s_2 \\ s_1 & s_2 & s_3 \\ s_2 & s_3 & s_4 \end{vmatrix}$$
$$= -s_2^3 + 2s_1 s_2 s_3 - 3s_3^2 - s_1^2 s_4 + 3s_2 s_4$$
$$\equiv -s_{\{2,2,2\}} + 2s_{\{3,2,1\}} - 3s_{\{3,3\}} - s_{\{4,1,1\}} + 3s_{\{4,2\}}$$

$$a_{\{\mu\}} = 3\left(\chi_{\{4,2\}}^{\{\mu\}} - \chi_{\{3,3\}}^{\{\mu\}}\right) + 2\chi_{\{3,2,1\}}^{\{\mu\}} - \chi_{\{2,2,2\}}^{\{\mu\}} - \chi_{\{4,1,1\}}^{\{\mu\}}$$

$$V^2 = \mathcal{S}_{\{4,2\}} - 3\mathcal{S}_{\{4,1,1\}} - 3\mathcal{S}_{\{3,3\}} + 6\mathcal{S}_{\{3,2,1\}} - 15\mathcal{S}_{\{2,2,2\}}$$

$$
\begin{aligned}
V^2 =& \mathcal{S}_{\{6,4,2\}} - 3\mathcal{S}_{\{5,5,2\}} - 3\mathcal{S}_{\{6,3,3\}} + 6\mathcal{S}_{\{5,4,3\}} \\
& -15\mathcal{S}_{\{4,4,3\}} - 3\mathcal{S}_{\{6,4,1,1\}} + 9\mathcal{S}_{\{5,5,1,1\}} + 6\mathcal{S}_{\{6,3,2,1\}} \\
& -12\mathcal{S}_{\{5,4,2,1\}} - 9\mathcal{S}_{\{5,3,3,1\}} + 27\mathcal{S}_{\{4,4,3,1\}} - 15\mathcal{S}_{\{6,2,2,2\}} \\
& +27\mathcal{S}_{\{5,3,2,2\}} - 6\mathcal{S}_{\{4,4,2,2\}} - 45\mathcal{S}_{\{4,3,3,2\}} + 105\mathcal{S}_{\{3,3,3,3\}}
\end{aligned}
$$

$$\{\tilde{\mu}\} = \{2(N-1) - \mu_N, 2(N-1) - \mu_{N-1}, \dots, 2(N-1) - \mu_1\}$$

$$a_{\{\mu\}} = a_{\{\tilde{\mu}\}}$$

$$[\tilde{\lambda}] = [3(N-1) - \lambda_N, 3(N-1) - \lambda_{N-1}, \dots, 3(N-1) - \lambda_1]$$

$$
\begin{aligned}
V^2(z_1, \dots, z_N) &= \left(\prod_{i=1}^{N} z_i^{2(N-1)}\right) V^2\left(\frac{1}{z_1}, \dots, \frac{1}{z_N}\right) \\
&= \left(\prod_{i=1}^{N} z_i^{2(N-1)}\right) \sum_{\{\mu\}} a_{\{\mu\}} \mathcal{S}_{\{\mu\}}\left(\frac{1}{z_1}, \dots, \frac{1}{z_N}\right)
\end{aligned}
$$

$$\left(\prod_{i=1}^{N} z_i^{2(N-1)}\right) \mathcal{S}_{\{\mu\}}\left(\frac{1}{z_1}, \dots, \frac{1}{z_N}\right) = \mathcal{S}_{\{\tilde{\mu}\}}(z_1, \dots, z_N)$$

$$
\begin{aligned}
V^2(z_1, \dots, z_N) &= \sum_{\{\mu\}} a_{\{\mu\}} \mathcal{S}_{\{\tilde{\mu}\}}(z_1, \dots, z_N) \\
&= \sum_{\{\mu\}} a_{\{\tilde{\mu}\}} \mathcal{S}_{\{\mu\}}(z_1, \dots, z_N)
\end{aligned}
$$

$$\{\mu\} = \{2(N-1), 2(N-2), \dots, 4, 2\}$$

$$a_{\{\mu\}} = 1.$$

$$|[\lambda]> = |[3(N-1), 3(N-2), \dots, 6, 3, 0]>$$

$$\{\mu\} = \{N-1, N-1, \dots, N-1\}$$

$$a_{\{\mu\}} = (-1)^{[N/2]}(2N-1)!!$$

$$1 \leq |a_{\{\mu\}}| \leq (2N-1)!! \text{ , for all } \{\mu\}$$

$$\{\mu\} = \{\overbrace{N, N, \dots, N}^{N-1}\}$$

$$a_{\{\mu\}} = (-1)^{[N/2]}(2N-3)!!$$

$$\{\tilde{\mu}\} = \{2(N-1), N-2, \dots, N-2\}$$

$$
\begin{aligned}
a_{\{2N,2N-2,2N-3,\dots,N+1,N,N-2\}} &= (-1)^{[N/2]+1}(N-1)(2N-3)!! \\
a_{\{2N+1,2N-2,2N-3,\dots,N+1,N,N-3\}} &= (-1)^{[N/2]+1}N(N-1)(2N-5)!! \\
&\vdots \\
a_{\{3(N-1),2N-2,2N-3,\dots,N+1,N,0\}} &= (-1)^{[N/2]+1}(2N-5)!!
\end{aligned}
$$

$$(-1)^{M-1}3 \cdot 2^{M-2}$$

$$\{\mu\} = \{2N-3, 2N-4, 2N-6, \dots, 4, 2, 1\}$$

$$[\lambda] = [3N-4, 3N-6, 3N-9, \dots, 6, 3, 1]$$

$$a_{\{\mu\}} = (-1)^{N-1}3 \cdot 2^{N-2}$$

$$\begin{aligned} V_N(z_1, z_2, \dots, z_N) &= \prod_{1 \le i < j}^{N} (z_i - z_j) \\ &= V_{N-1}(z_2, \dots, z_N) \prod_{j=2}^{N} (z_1 - z_j) \\ &= V_{N-1}(z_2, \dots, z_N) \\ &\quad (z_1^{N-1} - e_1 z_1^{N-2} + e_2 z_1^{N-3} - \dots + (-1)^{N-1} e_{N-1}) \end{aligned}$$

$$< L|\rho(z)|L >= \frac{1}{\mathcal{N}} \sum_{\{\mu\}} \left|c_{\{\mu\}}\right|^2 \sum_{i=1}^{N} \left|\phi_{\mu_i+N-i}(z)\right|^2$$

$$c_{\{\mu\}} = a_{\{\mu\}} \sqrt{\prod_{i=1}^{N} (\mu_i + N - i)!}$$

$$\int d^2z < L|\rho(z)|L >= N$$

$$\mathcal{N} = \frac{1}{\sqrt{N!\,\pi^N}} \sum_{\{\mu\}} \left|a_{\{\mu\}}\right|^2 \left(\prod_{i=1}^{N} (\mu_i + N - i)! \right)$$

$$r \equiv \frac{1}{\sqrt{3N}} |z|$$

$$\hat{\rho}(r) \equiv \pi < L|\rho(\sqrt{3N}r)|L >$$

$$\hat{\rho}_{\text{uniform}}(r) = \begin{cases} \frac{1}{3} & 0 \le r < 1 \\ 0 & r > 1 \end{cases}$$

$$\hat{\rho}(r) = \left(\frac{\pi}{\sum_{\{\mu\}} \left|c_{\{\mu\}}\right|^2} \right) \sum_{\{\mu\}} \left|c_{\{\mu\}}\right|^2 \hat{\rho}_{\{\mu\}}(r)$$

$$\hat{\rho}_{\{\mu\}}(r) \equiv e^{-3Nr^2} \sum_{i=1}^{N} \frac{(3Nr^2)^{\mu_i+N-i}}{(\mu_i + N - i)!}$$

$$\left|c_{\{2(N-1), 2(N-2), \dots, 2, 0\}}\right|^2 = \prod_{k=0}^{N-1} (3k)!$$

$$\hat{\rho}_{\{2(N-1),\ldots,2,0\}}(r) = e^{-3Nr^2} \sum_{k=0}^{N-1} \frac{(3Nr^2)^{3k}}{(3k)!}$$

$$|[\lambda] >= |[2N-2, 2N-3, \ldots, N, N-1] >$$

$$\frac{\left|c_{\{\mu\}}\right|^2}{\prod_{k=0}^{N-1}\ (3k)!} = \frac{((2N-1)!!)^2((2N-2)!\,(2N-3)!\ldots N!\,(N-1)!)}{\prod_{k=0}^{N-1}\ (3k)!}$$

$$\sqrt{\prod_{i=1}^{N} (\mu_i + N - i)!}$$

$$\frac{\left|c_{\{\mu\}}\right|^2}{\prod_{k=0}^{N-1}\ (3k)!} = \frac{((2N-3)!!)^2((2N-1)!\,(2N-2)!\ldots(N+2)!\,(N+1)!)}{\prod_{k=0}^{N-1}\ (3k)!}$$

$$\frac{\left|c_{\{\mu\}}\right|^2}{\prod_{k=0}^{N-1}\ (3k)!} = 9 \cdot 2^{2(N-2)} \frac{(3N-4)!\,(3N-6)!\ldots 3!\,1!}{(3N-3)!\,(3N-6)!\ldots 3!\,0!}$$
$$= 3\frac{2^{2(N-2)}}{N-1}$$

$$\hat{\rho}_{\mathrm{dom}}(r) = e^{-3Nr^2}\left(3Nr^2 + \sum_{k=1}^{N-2} \frac{(3Nr^2)^{3k}}{(3k)!} + \frac{(3Nr^2)^{3N-4}}{(3N-4)!}\right)$$

$$g(|z|) \equiv g(|z|,0)$$
$$= \frac{< L|\rho(|z|)\rho(0)|L >}{< L|\rho(|z|)|L >< L|\rho(0)|L >}$$

$$g(|z|) = \frac{\sum_{\{\mu\}\text{ s.t. }\mu_N\neq 0}\ \left|c_{\{\mu\}}\right|^2 \sum_{i=1}^{N-2}\ \left|\phi_{\mu_i+N-i}(|z|)\right|^2}{\left(\sum_{\{\mu\}}\ \left|c_{\{\mu\}}\right|^2 \left|\phi_{\mu_i+N-i}(|z|)\right|^2\right)\left(\sum_{\{\mu\}\text{ s.t. }\mu_N\neq 0}\ \left|c_{\{\mu\}}\right|^2\right)}$$

$$g_{\mathrm{approx}}\,(x) = \frac{(x^2/2)^4 + \sum_{j=2}^{N-2} \frac{(x^2/2)^{3j}}{(3j)!} + \frac{(x^2/2)^{3N-4}}{(3N-4)!}}{x^2/2 + \sum_{j=1}^{N-2} \frac{(x^2/2)^{3j}}{(3j)!} + \frac{(x^2/2)^{3N-4}}{(3N-4)!}}$$

$$E_{AF}(\tau) = \frac{\langle \Psi_T|H|\Psi_{AF}(\tau)\rangle}{\langle \Psi_T \mid \Psi_{AF}(\tau)\rangle} = \frac{\sum_i\ w_i(\tau)\langle \Psi_T|H|\phi_i(\tau)\rangle}{\sum_i\ w_i(\tau)\langle \Psi_T \mid \phi_i(\tau)\rangle}$$

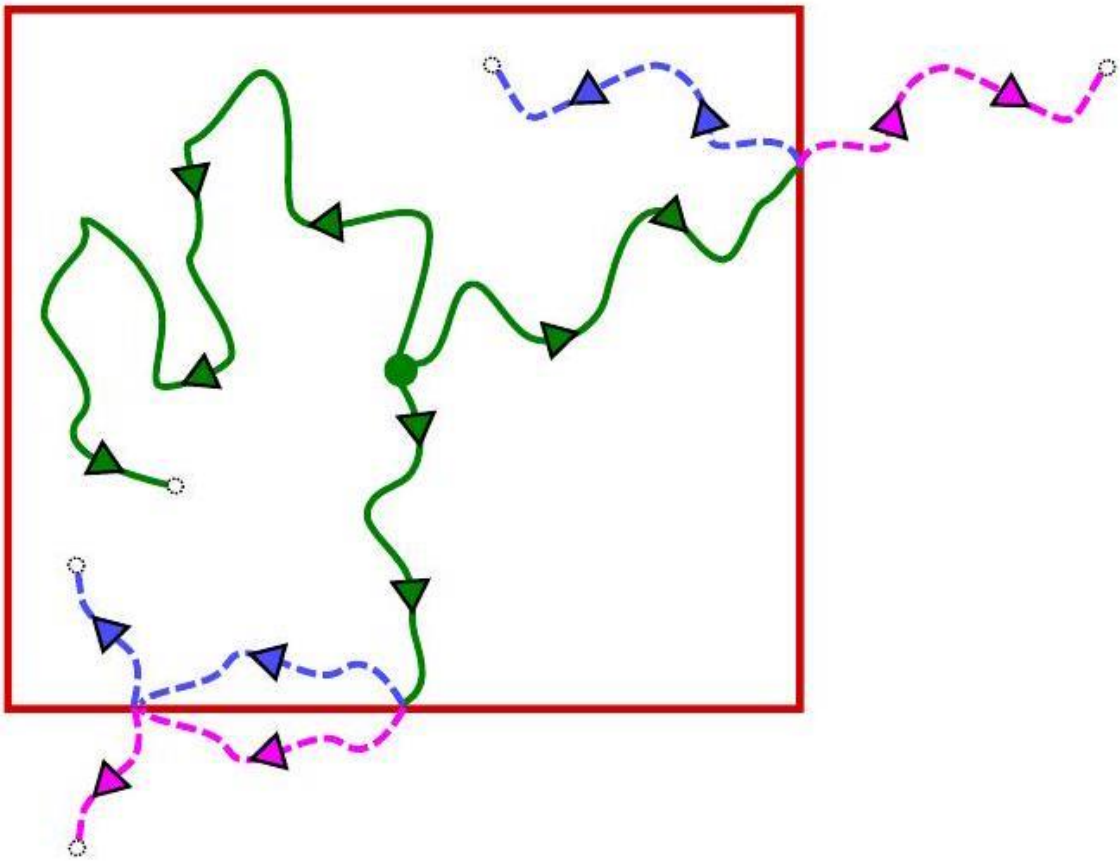

$$H = T_1 + T_2 = \sum_{ij\sigma} t_{ij} a_{i\sigma}^{\dagger} a_{j\sigma} + \sum_{i} U n_{i\alpha} n_{i\beta}$$

$$|\Psi(\tau)\rangle = \exp\left(-\tau(H - E_0)\right)|\Psi(0)\rangle = \prod_{l=1}^{\tau/\delta\tau} \exp\left(-\delta\tau(H - E_0)\right)|\Psi(0)\rangle$$

$$\overset{(i)}{\approx} \exp\left(\tau E_0\right) \prod_{l=1}^{\tau/\delta\tau} \exp\left(-\delta\tau T_2\right) \exp\left(-\delta\tau T_1\right)|\Psi(0)\rangle$$

$$\overset{(ii)}{=} \exp\left(\tau(E_0 - UN/2)\right) \prod_{l=1}^{\tau/\delta\tau} \exp\left(\delta\tau \sum_{k} H_k^2/2\right) \exp\left(-\delta\tau T_1\right)|\Psi(0)\rangle$$

$$\overset{(iii)}{=} \exp\left(\tau(E_0 - UN/2)\right) \prod_{l=1}^{\tau/\delta\tau} \left[\int \prod_{k} dx_k \frac{e^{-x_k^2/(2\delta\tau)}}{\sqrt{2\pi\delta\tau}} \exp\left(x_k H_k\right)\right] \exp\left(-\delta\tau T_1\right)|\Psi(0)\rangle$$

$n_{i\alpha} n_{i\beta} = -\frac{1}{2}\left(n_{i\alpha} - n_{i\beta}\right)^2 + \frac{1}{2} N_i$, where $N_i = n_{i\alpha}^2 + n_{i\beta}^2 = n_{i\alpha} + n_{i\beta}, N = \sum_i N_i$ and $H_k =$

$$\sqrt{U}\left(n_{k\alpha} - n_{k\beta}\right)$$

$$|\psi(\tau)\rangle = \int \psi(\vec{\theta}, \tau)|\phi(\vec{\theta})\rangle d\vec{\theta}$$

$$|\phi(\theta)\rangle = \begin{bmatrix} \cos(\theta) \\ \sin(\theta) \end{bmatrix}$$

$$T = \begin{bmatrix} a & b \\ b & a \end{bmatrix}$$

$$\begin{aligned} e^{\delta\tau T}|\phi(\theta)\rangle &= (1+\delta\tau T)|\phi(\theta)\rangle \\ &= \begin{bmatrix} \cos(\theta) \\ \sin(\theta) \end{bmatrix} + \delta\tau \begin{bmatrix} a\cos(\theta) + b\sin(\theta) \\ b\cos(\theta) + a\sin(\theta) \end{bmatrix} \\ &= (1 + a\delta\tau + b\delta\tau\sin(2\theta)) \begin{bmatrix} \cos(\theta) \\ \sin(\theta) \end{bmatrix} - b\delta\tau\cos(2\theta) \begin{bmatrix} \sin(\theta) \\ -\cos(\theta) \end{bmatrix} \end{aligned}$$

$$\begin{aligned} e^{\delta\tau T}|\phi(\theta)\rangle &= (1 + a\delta\tau + b\delta\tau\sin(2\theta)) \begin{bmatrix} \cos(\theta + \delta\tau b\cos(2\theta)) \\ \sin(\theta + \delta\tau b\cos(2\theta)) \end{bmatrix} \\ &= (1 + w(\theta)\delta\tau)|\phi(\theta + a(\theta)\delta\tau)\rangle \end{aligned}$$

$$\begin{aligned} e^{\delta\tau T}|\psi(\tau)\rangle &= \int \psi(\theta,\tau) e^{\delta\tau T}|\phi(\theta)\rangle d\theta \\ &= \int \psi(\theta,\tau)(1 + w(\theta)\delta\tau)|\phi(\theta + a(\theta)\delta\tau)\rangle d\theta \end{aligned}$$

$$\theta' = \theta + a(\theta)\delta\tau$$

$$\theta = \theta' + \delta\tau f(\theta')$$

$$\begin{aligned} \theta' &= \theta' + \delta\tau f(\theta') + a\big(\theta' + \delta\tau f(\theta')\big)\delta\tau \\ &= \theta' + \delta\tau\big(f(\theta') + a(\theta')\big) + O(\delta\tau^2) \end{aligned}$$

$$d\theta = \big(1 - \delta\tau a'(\theta')\big)d\theta'$$

$$\begin{aligned} e^{\delta\tau T}|\psi(\tau)\rangle &= \int \psi(\theta' - a(\theta')\delta\tau, \tau)\big(1 + w\big(\theta' - \delta\tau a(\theta')\big)\delta\tau\big)|\phi(\theta')\rangle\big(1 - \delta\tau a'(\theta')\big)d\theta' \\ &= \int \left[\psi(\theta,\tau) - \frac{\partial\psi}{\partial\theta} a(\theta)\delta\tau\right][1 + w(\theta)\delta\tau](1 - \delta\tau a'(\theta))|\phi(\theta)\rangle d\theta \end{aligned}$$

$$e^{\delta\tau T}|\psi(\tau)\rangle = \int \left(\psi(\theta,\tau) + \frac{\partial\psi}{\partial\tau}\delta\tau\right)|\phi(\theta)\rangle d\theta$$

$$\begin{aligned} \frac{\partial\psi}{\partial\tau} &= -a(\theta)\frac{\partial(\psi)}{\partial\theta} + (w(\theta) - a'(\theta))\psi \\ \frac{\partial\psi}{\partial\tau} &= -\frac{\partial(a(\theta)\psi)}{\partial\theta} + w(\theta)\psi \\ \frac{\partial\psi}{\partial\tau} &= -\frac{\partial(b\psi\cos(2\theta))}{\partial\theta} + (a + b\sin(2\theta))\psi \end{aligned}$$

$$e^{\delta\tau T_1}|\phi(\vec{\theta})\rangle = (1 + w(\vec{\theta})\delta\tau)|\phi(\vec{\theta} + \vec{\chi}(\vec{\theta})\delta\tau)\rangle$$

$$e^{\delta\tau T_1}|\psi(\tau)\rangle = \int \psi(\vec{\theta},\tau) e^{\delta\tau T_1}|\phi(\vec{\theta})\rangle d\vec{\theta} = \int \psi(\vec{\theta},\tau)(1 + w(\vec{\theta})\delta\tau)|\phi(\vec{\theta} + \vec{\chi}(\vec{\theta})\delta\tau)\rangle d\vec{\theta}$$

$$\overrightarrow{\theta'} = \vec{\theta} + \vec{\chi}(\vec{\theta})\delta\tau$$

$$\vec{\theta} = \overrightarrow{\theta'} - \vec{\chi}\big(\overrightarrow{\theta'}\big)\delta\tau$$

$$d\vec{\theta} = |\mathcal{J}| d\vec{\theta}'$$
$$\mathcal{J}_{\alpha,\beta} = \delta_{\alpha,\beta} - (\partial_\alpha \chi_\beta)\delta\tau$$
$$|\mathcal{J}| = \left(1 - \delta\tau(\partial_\alpha \chi_\alpha)\right)$$

$$\partial_\alpha \chi_\beta = \frac{\partial \chi_\beta(\vec{\theta})}{\partial \theta_\alpha}$$

$$e^{\delta\tau T_1}|\psi(\tau)\rangle = \int \psi(\vec{\theta} - \vec{\chi}(\vec{\theta})\delta\tau, \tau)(1 + w(\vec{\theta} - \vec{\chi}(\vec{\theta})\delta\tau)\delta\tau)\left(1 - \delta\tau(\partial_\alpha \chi_\alpha)\right)|\phi(\vec{\theta})\rangle d\vec{\theta}$$
$$= \int (\psi - (\partial_\alpha \psi)\chi_\alpha \delta\tau)(1 + w\delta\tau)\left(1 - \delta\tau(\partial_\alpha \chi_\alpha)\right)|\phi(\vec{\theta})\rangle d\vec{\theta}$$
$$= \int \left[\psi + \left(-(\partial_\alpha \psi)\chi_\alpha + \psi(w - \partial_\alpha \chi_\alpha)\right)\delta\tau\right]|\phi(\vec{\theta})\rangle d\vec{\theta}$$

$$e^{\delta\tau T_1}|\psi(\tau)\rangle = (1 + \delta\tau T_1)|\psi(\tau)\rangle = \int \left(\psi(\vec{\theta}, \tau) + \delta\tau \frac{\partial \psi(\vec{\theta}, \tau)}{\partial \tau}\right)|\phi(\vec{\theta})\rangle d\vec{\theta}$$

$$\frac{\partial \psi}{\partial \tau} = -\sum_\alpha \frac{\partial(\psi \chi_\alpha)}{\partial \theta_\alpha} + w\psi$$

$$e^{x_k H_k}|\phi(\vec{\theta})\rangle = \left(1 + g_i(\vec{\theta})x_i + h_{ij}(\vec{\theta})x_i x_j\right)\left|\phi\left(\vec{\theta} + \vec{\gamma}_i(\vec{\theta})x_i + \vec{\kappa}_{ij}(\vec{\theta})x_i x_j\right)\right\rangle$$

$$\overset{(i)}{=} \int \prod_k^{\frac{1}{2}\delta\tau \sum_k H_k^2} dx_k \frac{e^{-x_k^2/(2\delta\tau)}}{\sqrt{2\pi\delta\tau}} \int \psi(\vec{\theta}, \tau)\left[e^{x_k H_k}|\phi(\vec{\theta})\rangle\right] d\vec{\theta}$$
$$= \int \prod_k dx_k \frac{e^{-x_k^2/(2\delta\tau)}}{\sqrt{2\pi\delta\tau}} \int \psi(\vec{\theta}, \tau)\left(1 + g_i(\vec{\theta})x_i + h_{ij}(\vec{\theta})x_i x_j\right)\left|\phi\left(\vec{\theta} + \vec{\gamma}_i(\vec{\theta})x_i + \vec{\kappa}_{ij}(\vec{\theta})x_i x_j\right)\right\rangle d\vec{\theta}$$

$$\theta'_\alpha = \theta_\alpha + \gamma_{\alpha i} x_i + \kappa_{\alpha ij} x_i x_j$$

$$\theta_\alpha = \theta'_\alpha - \gamma_{\alpha i} x_i - \left(\kappa_{\alpha,ij} - (\partial_\beta \gamma_{\alpha i})\gamma_{\beta j}\right)x_i x_j$$

$$\eta_{\alpha ij} = \kappa_{\alpha,ij} - (\partial_\beta \gamma_{\alpha i})\gamma_{\beta j}$$

$$d\vec{\theta} = |\mathcal{J}| d\vec{\theta}'$$
$$\mathcal{J}_{\alpha\beta} = \delta_{\alpha\beta} - (\partial_\alpha \gamma_{\beta i})x_i - (\partial_\alpha \eta_{\beta ij})x_i x_j$$
$$|\mathcal{J}| = 1 - (\partial_\alpha \gamma_{\alpha i})x_i - (\partial_\alpha \eta_{\alpha ij})x_i x_j + \frac{1}{2}\left\{(\partial_\alpha \gamma_{\alpha i})(\partial_\beta \gamma_{\beta j})x_i x_j\right\} - \frac{1}{2}\left\{(\partial_\alpha \gamma_{\beta i})(\partial_\beta \gamma_{\alpha j})x_i x_j\right\}$$

$$\int \prod_k dx_k \frac{e^{-x_k^2/(2\delta\tau)}}{\sqrt{2\pi\delta\tau}} \int \psi(\vec{\theta},\tau)\big(1+g_i(\vec{\theta})x_i + h_{ij}(\vec{\theta})x_i x_j\big)\big|\phi\big(\vec{\theta}+\vec{\gamma}_i(\vec{\theta})x_i + \vec{\kappa}_{ij}(\vec{\theta})x_i x_j\big)\big\rangle d\vec{\theta}$$

$$=\int \prod_k dx_k \frac{e^{-x_k^2/(2\delta\tau)}}{\sqrt{2\pi\delta\tau}} \int \psi\big(\vec{\theta}-\vec{\gamma}_i x_i - \vec{\eta}_{ij}x_i x_j,\tau\big)\big(1+g_i\big(\vec{\theta}-\vec{\gamma}_i x_i\big)x_i + h_{ij}(\vec{\theta})x_i x_j\big)|\mathcal{J}(\vec{\theta},\vec{x})||\phi(\vec{\theta})\rangle d\vec{\theta}$$

$$=\int \prod_k dx_k \frac{e^{-x_k^2/(2\delta\tau)}}{\sqrt{2\pi\delta\tau}} \int \Big(\psi(\vec{\theta}) - (\partial_\alpha\psi)\big(\gamma_{\alpha i}x_i + \eta_{\alpha ij}x_i x_j\big) + \frac{1}{2}\big(\partial_\alpha\partial_\beta\psi\big)\gamma_{\alpha i}\gamma_{\beta j}x_i x_j\Big)$$

$$\big(1+g_i x_i - (\partial_\alpha g_i)\gamma_{\alpha j}x_i x_j + h_{ij}x_i x_j\big)|\mathcal{J}(\vec{\theta},\vec{x})||\phi(\vec{\theta})\rangle d\vec{\theta}$$

$$\overset{(i)}{=}\int \Big(\psi(\vec{\theta}) + \Big[-(\partial_\alpha\psi)\big(\gamma_{\alpha i}g_i - \gamma_{\alpha i}\big(\partial_\beta\gamma_{\beta i}\big) + \eta_{\alpha ii}\big) + \frac{1}{2}\big(\partial_\alpha\partial_\beta\psi\big)\gamma_{\alpha i}\gamma_{\beta i}$$

$$+\psi\Big(h_{ii} - g_i(\partial_\alpha\gamma_{\alpha i}) - (\partial_\alpha g_i)\gamma_{\alpha i} - \partial_\alpha\eta_{\alpha ii} + \frac{1}{2}(\partial_\alpha\gamma_{\alpha i})\big(\partial_\beta\gamma_{\beta i}\big) - \frac{1}{2}\big(\partial_\alpha\gamma_{\beta i}\partial_\beta\gamma_{\alpha i}\big)\Big)\Big]\delta\tau\Big)|\phi(\vec{\theta})\rangle d\vec{\theta}$$

$$\overset{(ii)}{=}\int \Big(\psi(\vec{\theta}) + \Big[-\partial_\alpha\{\psi(\gamma_{\alpha i}g_i + \kappa_{\alpha ii})\} + \frac{1}{2}\partial_\alpha\partial_\beta\{\psi\gamma_{\alpha i}\gamma_{\beta i}\} + h_{ii}\psi\Big]\delta\tau\Big)d\vec{\theta}$$

$$e^{-\delta\tau T_2}|\psi(\tau)\rangle = (1-\delta\tau T_2)|\psi(\tau)\rangle = \int \Big(\psi(\vec{\theta},\tau) - \delta\tau\frac{\partial\psi(\vec{\theta},\tau)}{\partial\tau}\Big)|\phi(\vec{\theta})\rangle d\vec{\theta}$$

$$\frac{\partial\psi}{\partial\tau} = -\frac{1}{2}\sum_{\alpha\beta i}\frac{\partial^2\big(\psi\gamma_{\alpha i}\gamma_{\beta i}\big)}{\partial\theta_\alpha\partial\theta_\beta} + \sum_{\alpha i}\frac{\partial\big(\psi(\gamma_{\alpha i}g_i + \kappa_{\alpha ii})\big)}{\partial\theta_\alpha} - \sum_i h_{ii}\psi$$

$$\frac{\partial\psi}{\partial\tau} = -\frac{1}{2}\sum_{\alpha\beta}\frac{\partial^2\big(\psi\sum_i\gamma_{\alpha i}\gamma_{\beta i}\big)}{\partial\theta_\alpha\partial\theta_\beta} + \sum_\alpha\frac{\partial\big(\psi(-\chi_\alpha + \sum_i\gamma_{\alpha i}g_i + \kappa_{\alpha ii})\big)}{\partial\theta_\alpha} + \Big(w - \sum_i h_{ii}\Big)\psi$$

$$\mathcal{D}_{\alpha\beta} = \sum_i \gamma_{\alpha i}\gamma_{\beta i}, \mathcal{V}_\alpha = -\chi_\alpha + \sum_i \gamma_{\alpha i}g_i + \kappa_{\alpha ii}, \mathcal{S} = w - \sum_i h_{ii}$$

$$\frac{\partial\psi}{\partial\tau} = -\frac{1}{2}\sum_{\alpha\beta}\frac{\partial^2\big(\psi\mathcal{D}_{\alpha\beta}\big)}{\partial\theta_\alpha\partial\theta_\beta} + \sum_\alpha\frac{\partial(\psi\mathcal{V}_\alpha)}{\partial\theta_\alpha} + \mathcal{S}\psi$$

$$|\phi\rangle = \prod_i^{N_\alpha} a_{i,\alpha}^\dagger \prod_j^{N_\beta} a_{j,\beta}^\dagger|0\rangle$$

$$a_{i,\sigma}^\dagger = \sum_p^M U_{p,i}^\sigma a_{p,\sigma}^\dagger$$

$$U \sim \prod_{i\in\text{occ},a\in\text{virt}} G_{ia}(\theta_{ia})I_{M,N}$$

$$G_{ia}(\theta) = \begin{bmatrix} 1 & \cdots & 0 & \cdots & 0 & \cdots & 0 \\ \vdots & \ddots & \vdots & & \vdots & & \vdots \\ 0 & \cdots & \cos(\theta) & \cdots & -\sin(\theta) & \cdots & 0 \\ \vdots & & \vdots & \ddots & \vdots & & \vdots \\ 0 & \cdots & \sin(\theta) & \cdots & \cos(\theta) & \cdots & 0 \\ \vdots & & \vdots & & \vdots & \ddots & \vdots \\ 0 & \cdots & 0 & \cdots & 0 & \cdots & 1 \end{bmatrix}$$

$$U = \begin{bmatrix} A \\ B \end{bmatrix}$$

$$A_{i,i} = \prod_{a=N+1}^{M} \cos\left(\theta_{i,a}\right)$$

$$\langle \phi \mid \Psi_T \rangle = \prod_{i=1}^{N} \prod_{a=N+1}^{M} \cos\left(\theta_{i,a}\right)$$

$$U = \begin{bmatrix} 0, \\ 1/\sqrt{2} \\ 1/\sqrt{2} \end{bmatrix}$$

$$U = \begin{bmatrix} \epsilon \\ \frac{1}{\sqrt{2}}\left(1 - \frac{\epsilon^2}{2}\right) \\ \frac{1}{\sqrt{2}}\left(1 - \frac{\epsilon^2}{2}\right) \end{bmatrix}$$

$$\theta_{12} = \frac{\pi}{4}, \theta_{13} = \frac{\pi}{2} - \sqrt{2}\epsilon$$

$$U = \begin{bmatrix} A \\ B \end{bmatrix}$$

$$A = R_1 Q_1$$

$$\tilde{U} = UQ_1 = \begin{bmatrix} R_1 \\ BQ_1 \end{bmatrix}$$

$$\theta_{ia} = \tan^{-1}\left(\frac{\tilde{U}_{ai}}{\tilde{U}_{ii}}\right), -\pi/2 < \theta_{ia} < \pi/2$$

$$I_{M,N} \sim \prod_{i=1}^{N} \prod_{a=N+1}^{M} G_{ia}(-\theta_{ia})U$$

$$U \sim \prod_{i=N}^{1} \prod_{a=M}^{N+1} G_{ia}(\theta_{ia})I_{M,N}$$

$$U \sim \prod_{i \in \mathcal{I}} \prod_{a \notin \mathcal{I}} G_{ia}(\theta_{ia})I_{M,\mathcal{I}}$$

$$g_i(\vec{\theta}), h_{ii}(\vec{\theta}), \vec{\gamma}_i(\vec{\theta}), \vec{\kappa}_{ij}(\vec{\theta}), w(\vec{\theta}), \vec{\chi}_i(\vec{\theta})$$

$$w(x_k) = \prod_i R_{ii}(x_k)$$

$$\left(w, \overrightarrow{\theta'}\right) = f\left(x_k, H_k, \vec{\theta}\right)$$

$$\theta_\alpha(p) = \frac{(1-N)\pi}{2N} + \frac{p\pi}{N}$$

$$\frac{\partial^2\psi}{\partial\theta_\alpha\partial\theta_\beta}(\cdots,p,\cdots,q,\cdots) \approx \frac{(\psi(\cdots,p-1,\cdots,q-1,\cdots) - \psi(\cdots,p-1,\cdots,q+1,\cdots)}{\frac{-\psi(\cdots,p+1,\cdots,q-1,\cdots) + \psi(\cdots,p+1,\cdots,q+1,\cdots)}{\Delta p\Delta q}}$$

$$\frac{\partial\psi}{\partial\theta_\alpha}(\cdots,p,\cdots,q,\cdots) \approx \frac{\psi(\cdots,p+1,\cdots,q,\cdots) - \psi(\cdots,p-1,\cdots,q,\cdots)}{2\Delta p}$$

$$\begin{aligned}&-(\partial_\alpha\psi)\big(\gamma_{\alpha i}g_i - \gamma_{\alpha i}(\partial_\beta\gamma_{\beta i}) + \eta_{\alpha ii}\big) + \frac{1}{2}(\partial_\alpha\partial_\beta\psi)\gamma_{\alpha i}\gamma_{\beta i}\\ &+\psi\left(h_{ii} - g_i(\partial_\alpha\gamma_{\alpha i}) - (\partial_\alpha g_i)\gamma_{\alpha i} - \partial_\alpha\eta_{\alpha ii} + \frac{1}{2}(\partial_\alpha\gamma_{\alpha i})(\partial_\beta\gamma_{\beta i}) - \frac{1}{2}(\partial_\alpha\gamma_{\beta i}\partial_\beta\gamma_{\alpha i})\right)\end{aligned}$$

$$\eta_{\alpha ii} = \kappa_{\alpha ii} - (\partial_\beta\gamma_{\alpha i})\gamma_{\beta i}$$

$$\begin{aligned}&-(\partial_\alpha\psi)\big(\gamma_{\alpha i}g_i - \gamma_{\alpha i}(\partial_\beta\gamma_{\beta i}) + \kappa_{\alpha ii} - (\partial_\beta\gamma_{\alpha i})\gamma_{\beta i}\big) + \frac{1}{2}(\partial_\alpha\partial_\beta\psi)\gamma_{\alpha i}\gamma_{\beta i}\\ &+\psi\left(h_{ii} - g_i(\partial_\alpha\gamma_{\alpha i}) - (\partial_\alpha g_i)\gamma_{\alpha i} - \partial_\alpha\kappa_{\alpha ii} + \gamma_{\beta i}\partial_\alpha\partial_\beta\gamma_{\alpha i} + (\partial_\beta\gamma_{\alpha i})(\partial_\alpha\gamma_{\beta i}) + \frac{1}{2}(\partial_\alpha\gamma_{\alpha i})(\partial_\beta\gamma_{\beta i}) - \frac{1}{2}(\partial_\alpha\gamma_{\beta i}\partial_\beta\gamma_{\alpha i})\right)\\ &= -\partial_\alpha\big(\psi(\gamma_{\alpha i}g_i + \kappa_{\alpha ii})\big) + (\partial_\alpha\psi)\big(\gamma_{\alpha i}(\partial_\beta\gamma_{\beta i}) + (\partial_\beta\gamma_{\alpha i})\gamma_{\beta i}\big) + \frac{1}{2}(\partial_\alpha\partial_\beta\psi)\gamma_{\alpha i}\gamma_{\beta i}\\ &+\psi\left(h_{ii} + \gamma_{\beta i}\partial_\alpha\partial_\beta\gamma_{\alpha i} + \frac{1}{2}(\partial_\alpha\gamma_{\alpha i})(\partial_\beta\gamma_{\beta i}) + \frac{1}{2}(\partial_\alpha\gamma_{\beta i}\partial_\beta\gamma_{\alpha i})\right)\\ &= -\partial_\alpha\big(\psi(\gamma_{\alpha i}g_i + \kappa_{\alpha ii})\big) + \frac{1}{2}\partial_\alpha\partial_\beta(\psi\gamma_{\alpha i}\gamma_{\beta i}) + \psi h_{ii}\end{aligned}$$

$$\hat{S}_p^+ = \hat{a}_{p\uparrow}^\dagger\hat{a}_{p\downarrow}^\dagger \quad \hat{S}_p^- = \hat{a}_{p\downarrow}\hat{a}_{p\uparrow} \quad \hat{n}_p = \hat{a}_{p\uparrow}^\dagger\hat{a}_{p\uparrow} + \hat{a}_{p\downarrow}^\dagger\hat{a}_{p\downarrow}$$

$$\left[\hat{S}_p^+, \hat{S}_q^-\right] = \delta_{pq}(\hat{n}_p - 1) \quad \left[\hat{n}_p, \hat{S}_q^\pm\right] = \pm 2\delta_{pq}\hat{S}_p^\pm$$

$$\hat{H}_{\mathrm{BCS}} = \frac{1}{2}\sum_p \xi_p\hat{n}_p + \frac{1}{2}\sum_{pq} \hat{S}_p^+\hat{S}_q^-$$

$$\hat{H}_{\mathrm{C}} = \sum_{pq} h_{pq}\sum_\sigma \hat{a}_{p\sigma}^\dagger\hat{a}_{q\sigma} + \frac{1}{2}\sum_{pqrs} V_{pqrs}\sum_{\sigma\tau} \hat{a}_{p\sigma}^\dagger\hat{a}_{r\tau}^\dagger\hat{a}_{s\tau}\hat{a}_{q\sigma}$$

$$\hat{H}_{\mathrm{PP}} = \frac{1}{2}\sum_\alpha \omega_\alpha\hat{n}_{\alpha_1} + \frac{1}{2}\sum_\alpha \left(\hat{S}_{\alpha_0}^+\hat{S}_{\alpha_1}^- + \hat{S}_{\alpha_1}^+\hat{S}_{\alpha_0}^-\right)$$

$$|\alpha_\pm\rangle = |\alpha_0\rangle + \left(\omega_\alpha \pm \sqrt{\omega_\alpha^2 + 1}\right)|\alpha_1\rangle$$

$$\mathcal{N}_{\alpha_\pm} = \langle\alpha_\pm \mid \alpha_\pm\rangle = 2\sqrt{\omega_\alpha^2 + 1}\left(\sqrt{\omega_\alpha^2 + 1} \pm \omega_\alpha\right)$$

$$|\Psi\rangle = \prod_\alpha |\alpha_-\rangle$$

$$n_{\alpha_\mu} = \frac{1}{2}\frac{\langle\Psi|\hat{n}_{\alpha_\mu}|\Psi\rangle}{\langle\Psi \mid \Psi\rangle} = \frac{1}{2}\left[1 + \frac{(-1)^\mu \omega_\alpha}{\sqrt{\omega_\alpha^2 + 1}}\right]$$

$$P_{\alpha_0\alpha_1} = \frac{\langle\Psi|\hat{S}^+_{\alpha_0}\hat{S}^-_{\alpha_1}|\Psi\rangle}{\langle\Psi \mid \Psi\rangle} = -\sqrt{n_{\alpha_0} n_{\alpha_1}} = -\frac{1}{2}\frac{1}{\sqrt{\omega_\alpha^2 + 1}}$$

$$D_{\alpha_\mu\beta_\nu} = \frac{1}{4}\frac{\langle\Psi|\hat{n}_{\alpha_\mu}\hat{n}_{\beta_\nu}|\Psi\rangle}{\langle\Psi \mid \Psi\rangle} = n_{\alpha_\mu} n_{\beta_\nu}.$$

$$\begin{aligned} E[\{\omega_\alpha\}] = {} & 2\sum_\alpha \sum_\mu n_{\alpha_\mu}\left(h_{\alpha_\mu\alpha_\mu} + \frac{1}{2}L_{\alpha_\mu\alpha_\mu}\right) \\ & +2\sum_\alpha P_{\alpha_0\alpha_1} L_{\alpha_0\alpha_1} \\ & +2\sum_{\alpha<\beta}\sum_{\mu\nu} D_{\alpha_\mu\beta_\nu} G_{\alpha_\mu\beta_\nu} \end{aligned}$$

$$\begin{aligned} J_{\alpha_\mu\beta_\nu} &= V_{\alpha_\mu\alpha_\mu\beta_\nu\beta_\nu} \\ K_{\alpha_\mu\beta_\nu} &= V_{\alpha_\mu\beta_\nu\beta_\nu\alpha_\mu} \\ L_{\alpha_\mu\beta_\nu} &= V_{\alpha_\mu\beta_\nu\alpha_\mu\beta_\nu} \end{aligned}$$

$$G_{\alpha_\mu\beta_\nu} = 2J_{\alpha_\mu\beta_\nu} - K_{\alpha_\mu\beta_\nu}$$

$$(\omega_\alpha^2 + 1)^{\frac{3}{2}}\frac{\partial E}{\partial \omega_\alpha} = \omega_\alpha L_{\alpha_0\alpha_1} + \sum_\mu (-1)^\mu\left(h_{\alpha_\mu\alpha_\mu} + \frac{1}{2}L_{\alpha_\mu\alpha_\mu} + \sum_{\beta(\neq\alpha)}\sum_\nu G_{\alpha_\mu\beta_\nu} n_{\beta_\nu}\right)$$

$$(\omega_\alpha^2 + 1)^{\frac{3}{2}}(\omega_\beta^2 + 1)^{\frac{3}{2}}\frac{\partial^2 E}{\partial\omega_\alpha\partial\omega_\beta} = \frac{1}{2}\sum_{\mu\nu}(-1)^{\mu+\nu} G_{\alpha_\mu\beta_\nu}$$

$$(\omega_\alpha^2 + 1)^{\frac{3}{2}}\frac{\partial^2 E}{\partial\omega_\alpha^2} = -3\omega_\alpha(\omega_\alpha^2 + 1)^{\frac{1}{2}}\frac{\partial E}{\partial\omega_\alpha} + L_{\alpha_0\alpha_1}$$

$$\sum_\mu (-1)^\mu\left(h_{\alpha_\mu\alpha_\mu} + \frac{1}{2}L_{\alpha_\mu\alpha_\mu} + \sum_{\beta(\neq\alpha)}\sum_\nu G_{\alpha_\mu\beta_\nu} n_{\beta_\nu}\right) = -\omega_\alpha L_{\alpha_0\alpha_1},$$

$$\varepsilon_{\alpha_\mu} = h_{\alpha_\mu\alpha_\mu} + \frac{1}{2}L_{\alpha_\mu\alpha_\mu} + \sum_{\beta(\neq\alpha)}\sum_\nu G_{\alpha_\mu\beta_\nu} n_{\beta_\nu}$$

$$\omega_\alpha = \frac{\varepsilon_{\alpha_1} - \varepsilon_{\alpha_0}}{L_{\alpha_0\alpha_1}}$$

$$E = \sum_\alpha\left[\varepsilon_{\alpha_0} + \varepsilon_{\alpha_1} + (\varepsilon_{\alpha_0} - \varepsilon_{\alpha_1})\sqrt{1 + \left(\frac{L_{\alpha_0\alpha_1}}{\varepsilon_{\alpha_1} - \varepsilon_{\alpha_0}}\right)^2}\right] - 2\sum_{\alpha<\beta}\sum_{\mu\nu} n_{\alpha_\mu} n_{\beta_\nu} G_{\alpha_\mu\beta_\nu},$$

$$\hat{U} = \exp\left[\sum_{p<q} \kappa_{pq} \sum_{\sigma} \left(\hat{a}^{\dagger}_{p\sigma}\hat{a}_{q\sigma} - \hat{a}^{\dagger}_{q\sigma}\hat{a}_{p\sigma}\right)\right]$$

$$\begin{aligned}\frac{\partial E}{\partial \kappa_{pq}} &= 4h_{pq}(n_p - n_q) \\ &+4\sum_{r} \left(2V_{rrpq} - V_{rqpr}\right)\left(D_{rp} - D_{rq}\right) \\ &+4\sum_{r} V_{rprq}\left(P_{rp} - P_{rq}\right)\end{aligned}$$

$$\begin{aligned}\frac{\partial^2 E}{\partial \kappa_{pq}\partial \kappa_{rs}} &= 4\left(P_{pr} - P_{ps} + P_{qs} - P_{qr}\right)\left(V_{qrps} + V_{qspr}\right) \\ &+4\left(D_{pr} - D_{ps} + D_{qs} - D_{qr}\right)\left(4V_{qprs} - V_{qrps} - V_{qsrp}\right) \\ &+\delta_{pr}\left[\left(4n_p - 2n_q - 2n_s\right)h_{qs} + W_{pqs}\right] \\ &+\delta_{qs}\left[\left(4n_q - 2n_p - 2n_r\right)h_{pr} + W_{qpr}\right] \\ &-\delta_{ps}\left[\left(4n_p - 2n_q - 2n_r\right)h_{qr} + W_{pqr}\right] \\ &-\delta_{qr}\left[\left(4n_q - 2n_p - 2n_s\right)h_{ps} + W_{qps}\right]\end{aligned}$$

$$\begin{aligned}W_{pqr} &= 2\sum_{s} \left(2P_{ps} - P_{qs} - P_{rs}\right)V_{qssr} \\ &+2\sum_{s} \left(2D_{ps} - D_{qs} - D_{rs}\right)\left(2V_{qrss} - V_{qssr}\right)\end{aligned}$$

$$\left(\omega_{\gamma}^2 + 1\right)^{\frac{3}{2}} \frac{\partial^2 E}{\partial \omega_{\gamma}\partial \kappa_{\alpha_\mu\beta_\nu}} = 2\sum_{\lambda} (-1)^{\lambda}\left(2V_{\gamma_\lambda\gamma_\lambda\alpha_\mu\beta_\nu} - V_{\gamma_\lambda\beta_\nu\alpha_\mu\gamma_\lambda}\right)\left(n_{\alpha_\mu} - n_{\beta_\nu}\right)$$

$$\begin{aligned}(\omega_{\alpha}^2 + 1)^{\frac{3}{2}} \frac{\partial^2 E}{\partial \omega_{\alpha}\partial \kappa_{\alpha_\mu\beta_\nu}} &= 2\omega_{\alpha}V_{\alpha_{1-\mu}\alpha_\mu\alpha_{1-\mu}\beta_\nu} + 2(-1)^{\mu}\left[Q_{\alpha_\mu\beta_\nu} + V_{\alpha_\mu\alpha_\mu\alpha_\mu\beta_\nu}\right] \\ &-2\sum_{\lambda} \left(2V_{\alpha_\lambda\alpha_\lambda\alpha_\mu\beta_\nu} - V_{\alpha_\lambda\beta_\nu\alpha_\mu\alpha_\lambda}\right)\left[(-1)^{\mu}n_{\alpha_\lambda} + (-1)^{\lambda}n_{\beta_\nu}\right]\end{aligned}$$

$$\begin{aligned}\left(\omega_{\beta}^2 + 1\right)^{\frac{3}{2}} \frac{\partial^2 E}{\partial \omega_{\beta}\partial \kappa_{\alpha_\mu\beta_\nu}} &= -2\omega_{\beta}V_{\beta_{1-\nu}\alpha_\mu\beta_{1-\nu}\beta_\nu} - 2(-1)^{\nu}\left[Q_{\alpha_\mu\beta_\nu} + V_{\beta_\nu\beta_\nu\beta_\nu\alpha_\mu}\right] \\ &+2\sum_{\lambda} \left(2V_{\beta_\lambda\beta_\lambda\alpha_\mu\beta_\nu} - V_{\beta_\lambda\beta_\nu\alpha_\mu\beta_\lambda}\right)\left[(-1)^{\lambda}n_{\alpha_\mu} + (-1)^{\nu}n_{\beta_\lambda}\right]\end{aligned}$$

$$\begin{aligned}\hat{H}_0 &= |\Psi\rangle\langle\Psi|\hat{H}_{\mathrm{C}}|\Psi\rangle\langle\Psi| \\ &+\sum_{\alpha\beta} \left|\Psi_{\alpha}^{\beta}\right\rangle\left\langle\Psi_{\alpha}^{\beta}\right|\hat{H}_{\mathrm{C}}\left|\Psi_{\alpha}^{\beta}\right\rangle\left\langle\Psi_{\alpha}^{\beta}\right| \\ &+\sum_{\alpha<\beta} \left|\Psi_{\alpha\beta}^{\alpha\beta}\right\rangle\left\langle\Psi_{\alpha\beta}^{\alpha\beta}\right|\hat{H}_{\mathrm{C}}\left|\Psi_{\alpha\beta}^{\alpha\beta}\right\rangle\left\langle\Psi_{\alpha\beta}^{\alpha\beta}\right|\end{aligned}$$

$$E^{(2)} = \sum_{\alpha\beta} \frac{\left|\left\langle\Psi_{\alpha}^{\beta}\middle|\hat{H}_{\mathrm{C}}\middle|\Psi\right\rangle\right|^2}{E^{(0)} - E_{\alpha}^{\beta}} + \sum_{\alpha<\beta} \frac{\left|\left\langle\Psi_{\alpha\beta}^{\alpha\beta}\middle|\hat{H}_{\mathrm{C}}\middle|\Psi\right\rangle\right|^2}{E^{(0)} - E_{\alpha\beta}^{\alpha\beta}}$$

$$E^{(0)} = \langle\Psi|\hat{H}_{\mathrm{C}}|\Psi\rangle, E_{\alpha}^{\beta} = \left\langle\Psi_{\alpha}^{\beta}\middle|\hat{H}_{\mathrm{C}}\middle|\Psi_{\alpha}^{\beta}\right\rangle, \text{and } E_{\alpha\beta}^{\alpha\beta} = \left\langle\Psi_{\alpha\beta}^{\alpha\beta}\middle|\hat{H}_{\mathrm{C}}\middle|\Psi_{\alpha\beta}^{\alpha\beta}\right\rangle$$

$$\Delta E_{\mathrm{PNOF7}} = -\frac{1}{4}\sum_{\alpha}\sum_{\beta(\neq\alpha)}\frac{1}{(\omega_{\alpha}^{2}+1)^{\frac{1}{2}}(\omega_{\beta}^{2}+1)^{\frac{1}{2}}}\sum_{\mu}\sum_{\nu}L_{\alpha_{\mu}\beta_{\nu}}.$$

$$\left|\Phi_{\mathrm{pCCD}}\right\rangle = e^{\hat{T}}|\Phi\rangle$$

$$\hat{T} = \sum_{ia} t_{i}^{a}\hat{S}_{a}^{+}\hat{S}_{i}^{-}$$

$$|\Phi\rangle = \prod_{\alpha}|\alpha_{0}\rangle$$

$$\begin{aligned}\left|\Phi_{\mathrm{pCCD}}\right\rangle &= \exp\left(\sum_{\alpha\beta} t_{\alpha}^{\beta}\hat{S}_{\beta_1}^{+}\hat{S}_{\alpha_0}^{-}\right)|\Phi\rangle \\ &= \exp\left(\sum_{\beta(\neq\alpha)} t_{\alpha}^{\beta}\hat{S}_{\beta_1}^{+}\hat{S}_{\alpha_0}^{-}\right)\exp\left(\sum_{\alpha} t_{\alpha}^{\alpha}\hat{S}_{\alpha_1}^{+}\hat{S}_{\alpha_0}^{-}\right)|\Phi\rangle \quad (34)\end{aligned}$$

$$\left\langle\Phi_{\alpha}^{\beta}\middle|\bar{H}|\Phi\right\rangle = 0$$

$$\begin{aligned}|\Psi\rangle &= \exp\left(\sum_{\alpha} t_{\alpha}^{\alpha}\hat{S}_{\alpha_1}^{+}\hat{S}_{\alpha_0}^{-}\right)|\Phi\rangle \\ &= \prod_{\alpha}\exp\left(t_{\alpha}^{\alpha}\hat{S}_{\alpha_1}^{+}\hat{S}_{\alpha_0}^{-}\right)|\Phi\rangle \\ &= \prod_{\alpha}\left(1 + t_{\alpha}^{\alpha}\hat{S}_{\alpha_1}^{+}\hat{S}_{\alpha_0}^{-}\right)|\Phi\rangle\end{aligned}$$

$$\begin{aligned}0 &= L_{ai} + 2\left(f_{aa} - f_{ii} - \sum_{j} L_{ja}t_{j}^{a} - \sum_{b} L_{ib}t_{i}^{b}\right)t_{i}^{a} \\ &-2(2J_{ia} - K_{ia} - L_{ia}t_{i}^{a})t_{i}^{a} + \sum_{b} L_{ba}t_{i}^{b} + \sum_{j} L_{ji}t_{j}^{a} + \sum_{jb} L_{jb}t_{j}^{a}t_{i}^{b}\end{aligned}$$

$$1 + 2\omega_{\alpha}t_{\alpha}^{\alpha} - (t_{\alpha}^{\alpha})^{2} = 0$$

$$\begin{aligned}\omega_{\alpha} &= \frac{f_{\alpha_1\alpha_1} - f_{\alpha_0\alpha_0} - 2J_{\alpha_0\alpha_1} + K_{\alpha_0\alpha_1} + \frac{L_{\alpha_0\alpha_0} + L_{\alpha_1\alpha_1}}{2}}{L_{\alpha_0\alpha_1}} \\ &= \frac{h_{\alpha_1\alpha_1} + \frac{L_{\alpha_1\alpha_1}}{2} - h_{\alpha_0\alpha_0} - \frac{L_{\alpha_0\alpha_0}}{2}}{L_{\alpha_0\alpha_1}}\end{aligned}$$

$$t_{\alpha}^{\alpha} = \omega_{\alpha} - \sqrt{1 + \omega_{\alpha}^{2}} = -\sqrt{\frac{n_{\alpha_1}}{n_{\alpha_0}}}$$

$$E_{\mathrm{pCCD}} = \langle \Phi | (1 + \hat{Z}) \bar{H} | \Phi \rangle$$

$$0 = L_{ia} + 2\left(f_{aa} - f_{ii} - \sum_j L_{ja} t_j^a - \sum_b L_{ib} t_i^b \right) z_a^i - 2(2J_{ia} - K_{ia} - 2L_{ia} t_i^a) z_a^i$$
$$+ \sum_b L_{ab} z_b^i + \sum_j L_{ij} z_a^j + \sum_{jb} t_j^b \left(L_{ib} z_a^j + L_{ja} z_b^i \right) - 2L_{ia} \left(\sum_j z_a^j t_j^a + \sum_b z_b^i t_i^b \right)$$

$$1 + 2(\omega_\alpha - t_\alpha^\alpha) z_\alpha^\alpha = 0$$

$$z_\alpha^\alpha = -\frac{1}{2(\omega_\alpha - t_\alpha^\alpha)} = -\sqrt{n_{\alpha_0} n_{\alpha_1}}$$

$$n_i = \left(1 - \sum_a t_i^a z_a^i \right)$$
$$n_a = \sum_i t_i^a z_a^i$$

$$\left(n_{\alpha_\mu} \right)_\alpha^\alpha = \frac{1}{2} \left[1 - \frac{(-1)^\mu \omega_\alpha}{\sqrt{\omega_\alpha^2 + 1}} \right] = n_{\alpha_{1-\mu}}$$

$$\left(P_{\alpha_0 \alpha_1} \right)_\alpha^\alpha = \left(P_{\alpha_1 \alpha_0} \right)_\alpha^\alpha = +\sqrt{\left(n_{\alpha_0} \right)_\alpha^\alpha \left(n_{\alpha_1} \right)_\alpha^\alpha} = -P_{\alpha_0 \alpha_1}$$

$$\left(n_{\alpha_0} \right)_\alpha^\beta = \left(n_{\alpha_1} \right)_\alpha^\beta = 0$$
$$\left(n_{\beta_0} \right)_\alpha^\beta = \left(n_{\beta_1} \right)_\alpha^\beta = 1$$

$$\left(P_{\alpha_0 \alpha_1} \right)_\alpha^\beta = \left(P_{\alpha_1 \alpha_0} \right)_\alpha^\beta = \left(P_{\beta_0 \beta_1} \right)_\alpha^\beta = \left(P_{\beta_1 \beta_0} \right)_\alpha^\beta = 0.$$

$$\left(D_{\beta_0 \beta_1} \right)_\alpha^\beta = 1.$$

$$(\omega_\alpha^2 + 1)^{\frac{1}{2}} \left(E^{(0)} - E_\alpha^\alpha \right) = -2L_{\alpha_0 \alpha_1} + 2\omega_\alpha \sum_\mu (-1)^\mu \left(h_{\alpha_\mu \alpha_\mu} + \frac{1}{2} L_{\alpha_\mu \alpha_\mu} + \sum_{\beta (\neq \alpha)} \sum_\nu G_{\alpha_\mu \beta_\nu} n_{\beta_\nu} \right)$$

$$E^{(0)} - E_\alpha^\alpha = \frac{L_{\alpha_0 \alpha_1}}{P_{\alpha_0 \alpha_1}}$$

$$E^{(0)} - E_{\alpha\beta}^{\alpha\beta} = \frac{L_{\alpha_0 \alpha_1}}{P_{\alpha_0 \alpha_1}} + \frac{L_{\beta_0 \beta_1}}{P_{\beta_0 \beta_1}}$$
$$-2\left(n_{\alpha_1} - n_{\alpha_0} \right) \left(n_{\beta_1} - n_{\beta_0} \right) \sum_{\mu\nu} (-1)^{\mu+\nu} G_{\alpha_\mu \beta_\nu}$$

$$E^{(0)} - E_{\alpha\beta}^{\alpha\beta} = -2(\omega_\alpha^2+1)^2 \frac{\partial^2 E}{\partial \omega_\alpha^2} - 2\left(\omega_\beta^2+1\right)^2 \frac{\partial^2 E}{\partial \omega_\beta^2}$$
$$-4\omega_\alpha\omega_\beta(\omega_\alpha^2+1)\left(\omega_\beta^2+1\right)\frac{\partial^2 E}{\partial \omega_\alpha \partial \omega_\beta}$$

$$E^{(0)} - E_\alpha^\beta = \frac{L_{\alpha_0\alpha_1}}{2P_{\alpha_0\alpha_1}} + \frac{L_{\beta_0\beta_1}}{2P_{\beta_0\beta_1}}$$
$$+\varepsilon_{\alpha_0} + \varepsilon_{\alpha_1} - \varepsilon_{\beta_0} - \varepsilon_{\beta_1} - 2G_{\beta_0\beta_1}$$
$$+2\sum_{\mu\nu} G_{\alpha_\mu\beta_\nu} n_{\alpha_\mu} n_{\beta_{1-\nu}},$$

$$\langle\Psi_\alpha^\alpha|\hat{n}_{\alpha_0}|\Psi\rangle = -\langle\Psi_\alpha^\alpha|\hat{n}_{\alpha_1}|\Psi\rangle = -P_{\alpha_0\alpha_1}$$

$$\langle\Psi_\alpha^\alpha|\hat{S}_{\alpha_1}^+\hat{S}_{\alpha_0}^-|\Psi\rangle = n_{\alpha_0}$$
$$\langle\Psi_\alpha^\alpha|\hat{S}_{\alpha_0}^+\hat{S}_{\alpha_1}^-|\Psi\rangle = -n_{\alpha_1}$$

$$\langle\Psi_\alpha^\alpha|\hat{n}_{\alpha_0}\hat{n}_{\beta_\nu}|\Psi\rangle = -\langle\Psi_\alpha^\alpha|\hat{n}_{\alpha_1}\hat{n}_{\beta_\nu}|\Psi\rangle = \langle\Psi_\alpha^\alpha|\hat{n}_{\alpha_0}|\Psi\rangle n_{\beta_\nu}$$

$$\left\langle\Psi_{\alpha\beta}^{\alpha\beta}\right|\hat{n}_{\alpha_0}\hat{n}_{\beta_0}|\Psi\rangle = -\left\langle\Psi_{\alpha\beta}^{\alpha\beta}\right|\hat{n}_{\alpha_0}\hat{n}_{\beta_1}|\Psi\rangle = -\left\langle\Psi_{\alpha\beta}^{\alpha\beta}\right|\hat{n}_{\alpha_1}\hat{n}_{\beta_0}|\Psi\rangle = \left\langle\Psi_{\alpha\beta}^{\alpha\beta}\right|\hat{n}_{\alpha_1}\hat{n}_{\beta_1}|\Psi\rangle$$
$$= P_{\alpha_0\alpha_1}P_{\beta_0\beta_1}$$

$$\left\langle\Psi_\alpha^\beta\right|\hat{S}_{\beta_{1-\nu}}^+\hat{S}_{\alpha_\mu}^-|\Psi\rangle = (-1)^{\mu+\nu}\sqrt{n_{\alpha_\mu}n_{\beta_\nu}}$$

$$\left\langle\Psi_\alpha^\beta\right|\hat{S}_{\alpha_0}^+\hat{S}_{\beta_0}^-|\Psi\rangle = \left\langle\Psi_\alpha^\beta\right|\hat{S}_{\alpha_1}^+\hat{S}_{\beta_0}^-|\Psi\rangle = \left\langle\Psi_\alpha^\beta\right|\hat{S}_{\alpha_0}^+\hat{S}_{\beta_1}^-|\Psi\rangle = \left\langle\Psi_\alpha^\beta\right|\hat{S}_{\alpha_1}^+\hat{S}_{\beta_1}^-|\Psi\rangle = 0.$$

$$(\omega_\alpha^2+1)^{\frac{1}{2}}\langle\Psi_\alpha^\alpha|\hat{H}_{\mathrm{C}}|\Psi\rangle = \omega_\alpha L_{\alpha_0\alpha_1} + \sum_\mu (-1)^\mu\left(h_{\alpha_\mu\alpha_\mu} + \frac{1}{2}L_{\alpha_\mu\alpha_\mu} + \sum_{\beta(\neq\alpha)}\sum_\nu G_{\alpha_\mu\beta_\nu}n_{\beta_\nu}\right)$$

$$\left\langle\Psi_{\alpha\beta}^{\alpha\beta}\right|\hat{H}_{\mathrm{C}}|\Psi\rangle = 2P_{\alpha_0\alpha_1}P_{\beta_0\beta_1}\sum_{\mu\nu}(-1)^{\mu+\nu}G_{\alpha_\mu\beta_\nu}$$

$$\left\langle\Psi_{\alpha\beta}^{\alpha\beta}\right|\hat{H}_{\mathrm{C}}|\Psi\rangle = 2(\omega_\alpha^2+1)\left(\omega_\beta^2+1\right)\frac{\partial^2 E}{\partial\omega_\alpha\partial\omega_\beta}$$

$$\left\langle\Psi_\alpha^\beta\right|\hat{H}_{\mathrm{C}}|\Psi\rangle = L_{\beta_1\alpha_0}\sqrt{n_{\alpha_0}n_{\beta_0}} - L_{\beta_1\alpha_1}\sqrt{n_{\alpha_1}n_{\beta_0}} - L_{\beta_0\alpha_0}\sqrt{n_{\alpha_0}n_{\beta_1}} + L_{\beta_0\alpha_1}\sqrt{n_{\alpha_1}n_{\beta_1}}.$$

$$|\psi\rangle = \sum_\alpha \lambda_\alpha^{(i)}\left|L_\alpha^{(i)}\right\rangle \otimes_g \left|R_\alpha^{(i)}\right\rangle$$

$$A_{\alpha\beta}^{n_i} = \left(\langle n_i| \otimes_g \left\langle L_\alpha^{(i-1)}\right|\right)\left|L_\beta^{(i)}\right\rangle$$

$$B_{\beta\alpha}^{n_i} = \left(\left\langle R_\alpha^{(i)}\right| \otimes_g \langle n_i|\right)\left|R_\beta^{(i-1)}\right\rangle.$$

$$C_{ij}^{AA} := \langle c_j^\dagger c_i \rangle_{i,j\in A} = U_A \Lambda_A U_A^\dagger$$

$$d_{A,\alpha}^\dagger = \sum_{i\in A} (U_A)_{i,\alpha} c_i^\dagger$$

$$\begin{pmatrix} \langle d_{L,\alpha}^\dagger d_{L,\alpha}\rangle & \langle d_{R,\alpha}^\dagger d_{L,\alpha}\rangle \\ \langle d_{L,\alpha}^\dagger d_{R,\alpha}\rangle & \langle d_{R,\alpha}^\dagger d_{R,\alpha}\rangle \end{pmatrix}_{\alpha\in E} = \begin{pmatrix} \lambda_\alpha & \sqrt{\lambda_\alpha(1-\lambda_\alpha)} \\ \sqrt{\lambda_\alpha(1-\lambda_\alpha)} & 1-\lambda_\alpha \end{pmatrix}$$

$$b_\alpha^\dagger = \sqrt{\lambda_\alpha} d_{L,\alpha}^\dagger + \sqrt{1-\lambda_\alpha} d_{R,\alpha}^\dagger.$$

$$|\psi\rangle = \prod_{\mu\in O_L} d_{L,\mu}^\dagger \prod_{\alpha\in E} \left(\sqrt{\lambda_\alpha} d_{L,\alpha}^\dagger + \sqrt{1-\lambda_\alpha} d_{R,\alpha}^\dagger\right) \prod_{\nu\in O_R} d_{R,\nu}^\dagger |0\rangle.$$

(a)

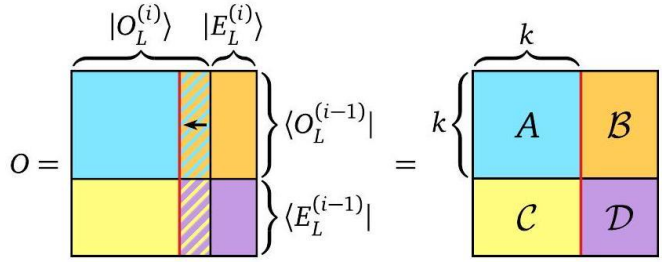

(b)

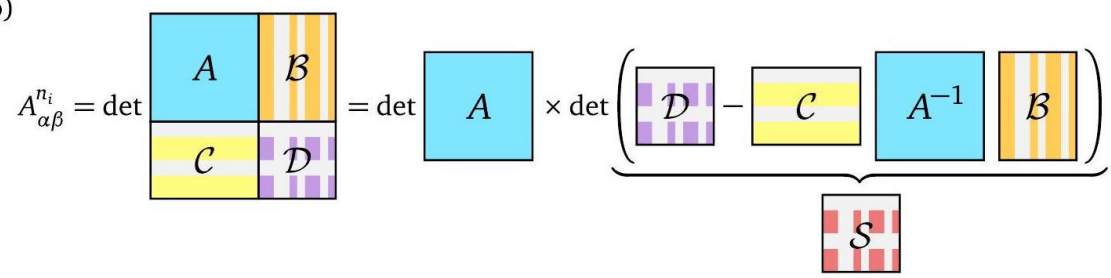

$$A_{\alpha\beta}^{n_i} = \begin{vmatrix} \left\langle O_L^{(i-1)} \mid O_L^{(i)} \right\rangle & \left\langle O_L^{(i-1)} \mid E_{L,\beta}^{(i)} \right\rangle \\ \left\langle E_{L,\alpha}^{(i-1)} \mid O_L^{(i)} \right\rangle & \left\langle E_{L,\alpha}^{(i-1)} \mid E_{L,\beta}^{(i)} \right\rangle \end{vmatrix} =: \begin{vmatrix} A & B \\ C & D \end{vmatrix},$$

$$\begin{vmatrix} A & B \\ C & D \end{vmatrix} = \det(A)\det(D - CA^{-1}B)$$

$$\mathcal{S} = \mathcal{D} - \mathcal{C}A^{-1}\mathcal{B}$$

$$O := \begin{pmatrix} \left\langle O_L^{(i-1)} \mid O_L^{(i)} \right\rangle & \left\langle O_L^{(i-1)} \mid E_L^{(i)} \right\rangle \\ \left\langle E_L^{(i-1)} \mid O_L^{(i)} \right\rangle & \left\langle E_L^{(i-1)} \mid E_L^{(i)} \right\rangle \end{pmatrix} := \begin{pmatrix} \mathcal{A} & \mathcal{B} \\ \mathcal{C} & \mathcal{D} \end{pmatrix},$$

$$\begin{pmatrix} c_i^\dagger c_j & c_i^\dagger c_j^\dagger \\ c_i c_j & c_i c_j^\dagger \end{pmatrix}$$

$$C = \mathbb{1} - \left\langle (c_i^\dagger, c_i)^\dagger (c_j^\dagger, c_j) \right\rangle = \begin{pmatrix} \langle c_j^\dagger c_i \rangle & \langle c_j c_i \rangle \\ \langle c_j^\dagger c_i^\dagger \rangle & \langle c_j c_i^\dagger \rangle \end{pmatrix}$$

$$\gamma_{2n} = (c_n^\dagger + c_n)/\sqrt{2}, \gamma_{2n+1} = i(c_n^\dagger - c_n)/\sqrt{2}$$

$$C^{AA} := \begin{pmatrix} \langle c_j^\dagger c_i \rangle & \langle c_j c_i \rangle \\ \langle c_j^\dagger c_i^\dagger \rangle & \langle c_j c_i^\dagger \rangle \end{pmatrix}_{i,j\in A} = N_A \Lambda N_A^\dagger$$

$$N_A = \begin{pmatrix} U & V^* \\ V & U^* \end{pmatrix}$$

$$\rho_A = \prod_{\alpha=1}^{n} \left[\lambda_\alpha \gamma_\alpha^\dagger \gamma_\alpha + (1-\lambda_\alpha)\gamma_\alpha \gamma_\alpha^\dagger\right] (\gamma_\alpha^\dagger, \gamma_\alpha) = (c_i^\dagger, c_i) \begin{pmatrix} U & V^* \\ V & U^* \end{pmatrix}$$

$$C^{LR} = N_{L,\mathrm{ent}} \begin{pmatrix} 0 & \mathrm{diag}\left(\sqrt{\lambda_\alpha(1-\lambda_\alpha)}\right) \\ -\mathrm{diag}\left(\sqrt{\lambda_\alpha(1-\lambda_\alpha)}\right) & 0 \end{pmatrix} N_{R,\mathrm{ent}}^\dagger$$

$$\begin{pmatrix} \langle \gamma_{L,\alpha}^\dagger \gamma_{L,\alpha} \rangle & \langle \gamma_{R,\alpha} \gamma_{L,\alpha} \rangle \\ \langle \gamma_{L,\alpha}^\dagger \gamma_{R,\alpha}^\dagger \rangle & \langle \gamma_{R,\alpha} \gamma_{R,\alpha}^\dagger \rangle \end{pmatrix} = \begin{pmatrix} \lambda_\alpha & \sqrt{\lambda_\alpha(1-\lambda_\alpha)} \\ \sqrt{\lambda(1-\lambda_\alpha)} & 1-\lambda_\alpha \end{pmatrix}$$

$$\begin{pmatrix} \langle \gamma_{L,\alpha} \gamma_{L,\alpha}^\dagger \rangle & \langle \gamma_{R,\alpha}^\dagger \gamma_{L,\alpha}^\dagger \rangle \\ \langle \gamma_{L,\alpha} \gamma_{R,\alpha} \rangle & \langle \gamma_{R,\alpha}^\dagger \gamma_{R,\alpha} \rangle \end{pmatrix} = \begin{pmatrix} 1-\lambda_\alpha & -\sqrt{\lambda_\alpha(1-\lambda_\alpha)} \\ -\sqrt{\lambda(1-\lambda_\alpha)} & \lambda_\alpha \end{pmatrix}$$

$$\Gamma_\alpha = \sqrt{1-\lambda_\alpha}\gamma_{L,\alpha} - \sqrt{\lambda_\alpha}\gamma_{R,\alpha}^\dagger \; \tilde{\Gamma}_\alpha = \sqrt{\lambda_\alpha}\gamma_{L,\alpha}^\dagger + \sqrt{1-\lambda_\alpha}\gamma_{R,\alpha}$$

$$|\psi\rangle = \prod_{\lambda_\alpha \neq 0} \left(\sqrt{1-\lambda_\alpha} + \sqrt{\lambda_\alpha}\gamma_{L,\alpha}^\dagger \gamma_{R,\alpha}^\dagger\right) |\mathrm{vac}_L\rangle \otimes_g |\mathrm{vac}_R\rangle,$$

$$O = \langle \mathrm{vac}_A | a_{\alpha_k} \dots a_{\alpha_1} b_{\beta_1}^\dagger \dots b_{\beta_m}^\dagger | \mathrm{vac}_B \rangle$$

$$(b^\dagger, b) = (a^\dagger, a) \begin{pmatrix} U & V^* \\ V & U^* \end{pmatrix}$$

$$|\mathrm{vac}_B\rangle = \frac{1}{|\det U|} \exp\left(\frac{1}{2} M_{\alpha\beta} a_\alpha^\dagger a_\beta^\dagger\right) |\mathrm{vac}_A\rangle$$

$$O = \frac{1}{|\det U|} \mathrm{pf} \begin{pmatrix} N^{BB} & N^{BA} \\ -(N^{BA})^{\mathrm{T}} & N^{AA} \end{pmatrix}$$

$$N_{ij}^{AA} = M_{\alpha_i \alpha_j}, N_{ij}^{BA} = [(U^*)^{-1}]_{\beta_{m+1-i}\alpha_j}, N_{ij}^{BB} = [(U^*)^{-1}V]_{\beta_{m+1-i}\beta_{m+1-j}}$$

$$(C_0)_{\alpha\beta} = \left\langle L_\alpha^{(L-k,n)} \mid L_\beta^{(L,n)} \right\rangle, \qquad (D_0)_{\alpha\beta} = \left\langle R_\beta^{(L-k,n)} \mid R_\alpha^{(L,n+k)} \right\rangle$$

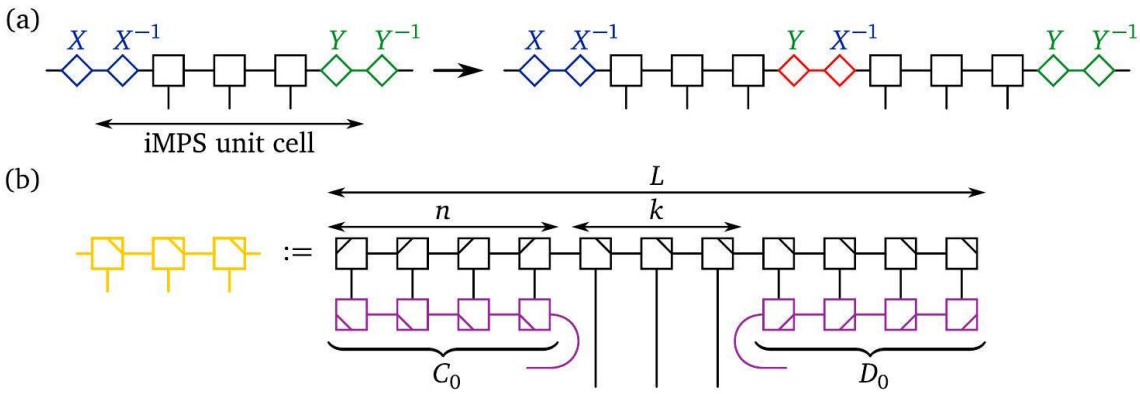

$$\tilde{B}^{n_k}_{\alpha\beta} = B^{n_k}_{\alpha\gamma}(D_0)_{\gamma\beta} = \left\langle R^{(L-k,n)}_{\beta} \mid R^{(L,n+k)}_{\gamma} \right\rangle \times \left(\left\langle R^{(L,n+k)}_{\gamma} \right| \otimes_g \langle n_k| \right) \left| R^{(L,n+k-1)}_{\alpha} \right\rangle$$
$$= \left(\left\langle R^{(L-k,n)}_{\beta} \right| \otimes_g \langle n_k| \right) \left| R^{(L,n+k-1)}_{\alpha} \right\rangle$$

$$\vec{S}_i = \frac{1}{2} f^{\dagger}_{i\alpha} \vec{\sigma}_{\alpha\beta} f_{i\beta}, \left(f^{\dagger}_{i\alpha} f_{i\alpha} = 1 \right)$$

$$c_{i,\uparrow} := f_{i,\uparrow}, c_{i,\downarrow} := f^{\dagger}_{i,\downarrow}$$

$$\lambda(P) = \prod_{i \in P} a_i \prod_{j \in \bar{P}} b_j$$

$$\lambda(P) = \tilde{\lambda}(P') = \prod_{i \in P'} m_i \prod_{j \in \bar{P}'} M_j = \prod_{i \in P'} \frac{m_i}{M_i} \prod_{j=1}^{n} M_j$$
$$\log \tilde{\lambda}(P') = \text{const.} - \sum_{i \in P'} \underbrace{\log \left(\frac{M_i}{m_i} \right)}_{r_i}$$

$$C = \begin{pmatrix} C^{LL} & C^{LR} \\ (C^{LR})^{\dagger} & C^{RR} \end{pmatrix}$$

$$(C^{LL})^2 + C^{LR}(C^{LR})^{\dagger} = C^{LL}$$
$$C^{LL}C^{LR} + C^{LR}C^{RR} = C^{LR}$$
$$(C^{LR})^{\dagger}C^{LR} + (C^{RR})^2 = C^{RR}$$

$$v = \frac{(C^{LR})^{\dagger} u}{\sigma} \quad u = \frac{C^{LR} v}{\sigma}$$

$$\frac{(C^{LR})^{\dagger} C^{LL} u}{\sigma} + C^{RR} v = v$$
$$C^{RR} v = (1 - \lambda) v$$

$$C^{LR} = \sum_{\text{ent}} \sqrt{\lambda(1-\lambda)} u_{\lambda} v^{\dagger}_{1-\lambda}$$

$$\tilde{C}^{LR} := \tilde{U}^{\dagger} C^{LR} \tilde{V} = \sigma(1-\sigma) W$$

$$\tilde{C}^{LR} = P \Sigma Q^{\dagger} \Longrightarrow U := \tilde{U} P \; V := \tilde{V} Q$$

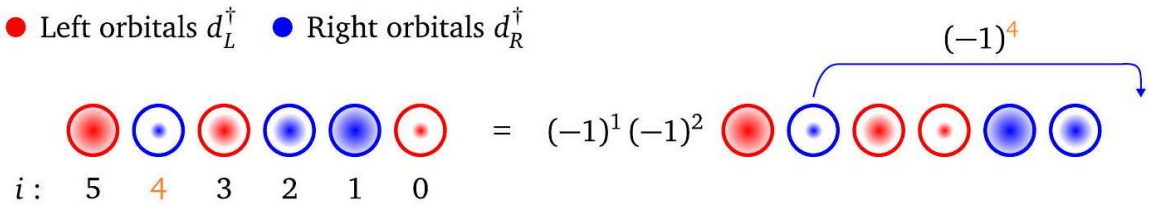

$$n_{L,\alpha} = \frac{r_{L,\alpha} + i r_{L,\alpha+d/2}}{\sqrt{2}}, \quad \overline{n_{L,\alpha}} = \frac{r_{L,\alpha} - i r_{L,\alpha+d/2}}{\sqrt{2}},$$
$$n_{R,\alpha} = \frac{i r_{R,\alpha} + r_{R,\alpha+d/2}}{\sqrt{2}}, \quad \overline{n_{R,\alpha}} = \frac{-i r_{R,\alpha} + r_{R,\alpha+d/2}}{\sqrt{2}}. \quad (0 \le \alpha < d/2)$$

$$|S\rangle = \prod_{\mu\in O_L} d_{L,\mu}^\dagger \left(\dots d_{R,i+1}^\dagger d_{L,i}^\dagger d_{R,i-1}^\dagger \dots\right) \prod_{\nu\in O_R} d_{R,\nu}^\dagger |\mathrm{vac}\rangle$$
$$= \mathrm{sgn}(\pi)\left[\prod_{\mu\in O_L} d_{L,\mu}^\dagger \left(\dots d_{L,i}^\dagger \dots\right)|\mathrm{vac}_L\rangle\right] \otimes_g \left[\left(\dots d_{R,i-1}^\dagger d_{R,i+1}^\dagger \dots\right) \prod_{\nu\in O_R} d_{R,\nu}^\dagger |\mathrm{vac}_R\rangle\right]$$

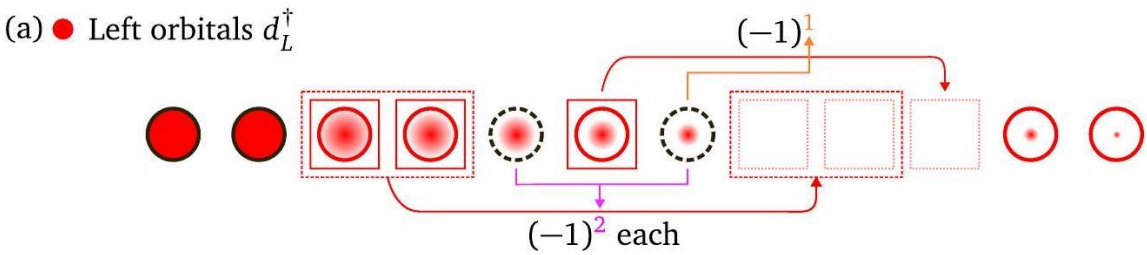

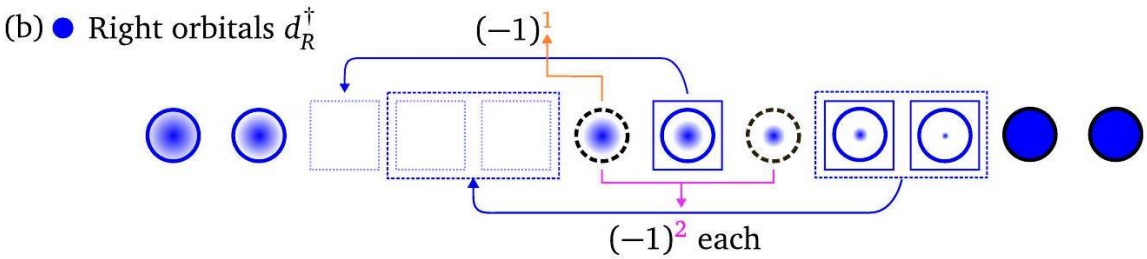

$$|S\rangle = \gamma_{L,\alpha_1}^\dagger \gamma_{R,\alpha_1}^\dagger \dots \gamma_{L,\alpha_k}^\dagger \gamma_{R,\alpha_k}^\dagger |\mathrm{vac}_L\rangle \otimes_g |\mathrm{vac}_R\rangle = \gamma_{L,\alpha_1}^\dagger \dots \gamma_{L,\alpha_k}^\dagger \gamma_{R,\alpha_k}^\dagger \dots \gamma_{R,\alpha_1}^\dagger |\mathrm{vac}_L\rangle \otimes_g |\mathrm{vac}_R\rangle,$$

$$|S\rangle = (-1)^{k\pi_L}\left(\gamma_{L,\alpha_1}^\dagger \dots \gamma_{L,\alpha_k}^\dagger |\mathrm{vac}_L\rangle\right) \otimes_g \left(\gamma_{R,\alpha_k}^\dagger \dots \gamma_{R,\alpha_1} |\mathrm{vac}_R\rangle\right)$$

$$A_{\alpha\beta}^{n_i} = \langle 0_i | c_i^{n_i} \otimes_g \left\langle \mathrm{vac}_L^{(i-1)} \middle| \gamma_{L,\alpha_k}^{(i-1)} \dots \gamma_{L,\alpha_1}^{(i-1)} \otimes_g \gamma_{L,\beta_1}^{(i)\dagger} \dots \gamma_{L,\beta_m}^{(i)\dagger} \middle| \mathrm{vac}_L^{(i)} \right\rangle$$
$$B_{\beta\alpha}^{n_i} = \left\langle \mathrm{vac}_R^{(i)} \middle| \gamma_{R,\alpha_k}^{(i)} \dots \gamma_{R,\alpha_1}^{(i)} \otimes_g \langle 0_i | c_i^{n_i} \otimes_g \gamma_{R,\beta_1}^{(i-1)\dagger} \dots \gamma_{R,\beta_m}^{(i-1)\dagger} \middle| \mathrm{vac}_R^{(i-1)} \right\rangle$$

$$A_{\alpha\beta}^{n_i} = (-1)^{n_i \pi_L^{(i-1)}} \langle 0_i | \otimes_g \left\langle \mathrm{vac}_L^{(i-1)} \middle| c_i^{n_i} \gamma_{L,\alpha_k}^{(i-1)} \dots \gamma_{L,\alpha_1}^{(i-1)} \gamma_{L,\beta_1}^{(i)\dagger} \dots \gamma_{L,\beta_m}^{(i)\dagger} \middle| \mathrm{vac}_L^{(i)} \right\rangle$$
$$B_{\beta\alpha}^{n_i} = \left\langle \mathrm{vac}_R^{(i)} \middle| \otimes_g \langle 0_i | \gamma_{R,\alpha_k}^{(i)} \dots \gamma_{R,\alpha_1}^{(i)} c_i^{n_i} \gamma_{R,\beta_1}^{(i-1)\dagger} \dots \gamma_{R,\beta_m}^{(i-1)\dagger} \middle| \mathrm{vac}_R^{(i-1)} \right\rangle$$

$$\langle \mathrm{vac}_A | a_0 a_{\alpha_k} \dots a_{\alpha_1} = \langle \mathrm{vac}_A' | a_{\alpha_k} \dots a_{\alpha_1}$$
$$\langle \mathrm{vac}_A | a_{\alpha_k} \dots a_{\alpha_1} = \langle \mathrm{vac}_A | a_0 a_0^\dagger a_{\alpha_k} \dots a_{\alpha_1} = \langle \mathrm{vac}_A' | a_0' a_{\alpha_k} \dots a_{\alpha_1}$$

$$\langle \mathrm{vac}_A | a_{\alpha_k} \dots a_{\alpha_1} a_0 \ = (-1)^k \langle \mathrm{vac}_A | a_0 a_{\alpha_k} \dots a_{\alpha_1} = (-1)^k \langle \mathrm{vac}'_A | a_{\alpha_k} \dots a_{\alpha_1}$$
$$\langle \mathrm{vac}_A | a_{\alpha_k} \dots a_{\alpha_1} \ = \langle \mathrm{vac}_A | a_{\alpha_k} \dots a_{\alpha_1} a_0 a_0^\dagger = (-1)^k \langle \mathrm{vac}'_A | a_{\alpha_k} \dots a_{\alpha_1} a'_0$$

$$O := |\det U| \times \langle \mathrm{vac}_A | \gamma_n \dots \gamma_2 \gamma_1 | \mathrm{vac}_B \rangle = \mathrm{pf} N$$

$$N_{i>j} = \begin{cases} 0 & \gamma_i = a_\alpha^\dagger \text{ for some } \alpha \\ -\delta_{\alpha_i \alpha_j} & \gamma_i = a_{\alpha_i}, \gamma_j = a_{\alpha_j}^\dagger \\ M_{\alpha_i \alpha_j} & \gamma_i = a_{\alpha_i}, \gamma_j = a_{\alpha_j} \end{cases}$$

$$O = \langle \mathrm{vac}_A | a_{\alpha_n} \dots a_{\alpha_1} \exp\left(\frac{1}{2} M_{\alpha\beta} a_\alpha^\dagger a_\beta^\dagger\right) | \mathrm{vac}_A \rangle = \mathrm{pf}\left[M_{\alpha_i \alpha_j}\right]_{ij}$$

$$\begin{aligned} O &= \langle \mathrm{vac}_A | a_{\alpha_n} \dots a_{\alpha_{j+1}} a_{\alpha_j}^\dagger | S \rangle \\ &= \delta_{\alpha_{j+1}\alpha_j} \langle \mathrm{vac}_A | a_{\alpha_n} \dots a_{\alpha_{j+2}} | S \rangle - \langle \mathrm{vac}_A | a_{\alpha_n} \dots a_{\alpha_{j+2}} a_{\alpha_j}^\dagger a_{\alpha_{j+1}} | S \rangle = \cdots \\ &= \sum_{i=j+1}^{n} (-1)^{i+j+1} \delta_{\alpha_i \alpha_j} \langle \mathrm{vac}_A | a_{\alpha_n} \dots a_{\alpha_{i+1}} a_{\alpha_{i-1}} \dots a_{\alpha_{j+1}} | S \rangle \end{aligned}$$

$$O = \sum_{i=j+1}^{n} (-1)^{i+j+1} N_{ji} \mathrm{pf}\left[N_{\setminus ij}\right]$$

$$O := \langle \mathrm{vac}_A | \gamma_n \dots \gamma_2 \gamma_1 | \mathrm{vac}_B \rangle = \frac{\mathrm{pf} N}{|\det U|}$$

$$N_{i>j} = C_{\cdot i}^{\mathrm{T}} \left(M C_{\cdot j} - D_{\cdot j}\right).$$

$$O = \sum_\alpha C_{\alpha k} \langle \mathrm{vac}_A | \gamma_n \dots \gamma_{k+1} a_\alpha \gamma_{k-1} \dots \gamma_1 | \mathrm{vac}_B \rangle + D_{\alpha k} \langle \mathrm{vac}_A | \gamma_n \dots \gamma_{k+1} a_\alpha^\dagger \gamma_{k-1} \dots \gamma_1 | \mathrm{vac}_B \rangle$$

$$\gamma_i = \begin{cases} b_{\beta_{m+1-i}}^\dagger = a_\alpha U_{\alpha \beta_{m+1-i}} + a_\alpha^\dagger V_{\alpha \beta_{m+1-i}} & 1 \le i \le m \\ a_{\alpha_{i-m}} & m < i \le m+k \end{cases}$$

$$|\det U| \times \langle \mathrm{vac}_A | a_{\alpha_k} \dots a_{\alpha_1} b_{\beta_1}^\dagger \dots b_{\beta_m}^\dagger | \mathrm{vac}_B \rangle = \mathrm{pf} \begin{pmatrix} N^{BB} & N^{BA} \\ N^{AB} & N^{AA} \end{pmatrix}$$

$$N_{ij}^{AA} = M_{\alpha_i \alpha_j}$$
$$N_{ij}^{AB} = \left(M V_{\cdot \beta_{m+1-j}} - U_{\cdot \beta_{m+1-j}}\right)_{\alpha_i}$$
$$N_{ij}^{BB} = V_{\cdot \beta_{m+1-i}}^{\mathrm{T}} \left(M V_{\cdot \beta_{m+1-j}} - U_{\cdot \beta_{m+1-j}}\right)$$

$$M = (V U^{-1})^* = -(V U^{-1})^\dagger = -\left(U^\dagger\right)^{-1} V^\dagger$$
$$M V - U = -\left(U^\dagger\right)^{-1} V^\dagger V - U = -\left(U^\dagger\right)^{-1} \left(\mathbb{1} - U^\dagger U\right) - U = \left[U - \left(U^\dagger\right)^{-1}\right] - U = -\left(U^\dagger\right)^{-1}$$

$$N_{ij}^{AB} = -\left[\left(U^\dagger\right)^{-1}\right]_{\alpha_i \beta_{m+1-j}}$$
$$N_{ij}^{BB} = -\left[V^{\mathrm{T}} \left(U^\dagger\right)^{-1}\right]_{\beta_{m+1-i} \beta_{m+1-j}} = \left[(U^*)^{-1} V\right]_{\beta_{m+1-i} \beta_{m+1-j}}$$

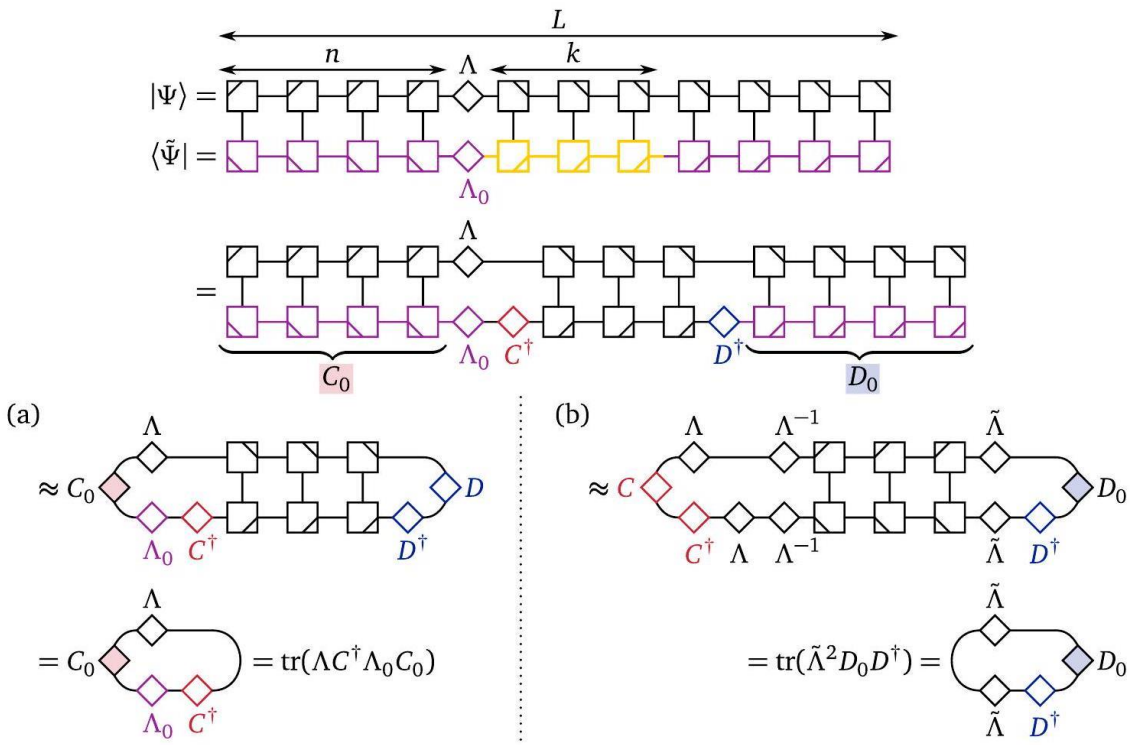

$$\mathrm{tr}\left(AR^{\dagger}\right) = \mathrm{tr}\left(U\Sigma V^{\dagger}R^{\dagger}\right) = \mathrm{tr}\left(\Sigma V^{\dagger}R^{\dagger}U\right) = \sum_{i} \sigma_i \left(V^{\dagger}R^{\dagger}U\right)_{ii}$$

$$\begin{aligned} \| |\Psi\rangle - |\tilde{\Psi}\rangle \|^2 &= \mathrm{tr}\Lambda^2 + \mathrm{tr}\Lambda_0^2 - \mathrm{tr}\left(C_0 \Lambda C^{\dagger} \Lambda_0\right) - \mathrm{tr}\left(\Lambda_0 C \Lambda C_0^{\dagger}\right) \\ &= \mathrm{tr}[(\Lambda_0 C - C_0 \Lambda) \times \text{ H.c. }] + \mathrm{tr}\left[\Lambda\left(\mathbb{1} - C_0^{\dagger} C_0\right)\Lambda\right] \end{aligned}$$

$$\begin{aligned} \| |\Psi\rangle - |\tilde{\Psi}\rangle \|^2 &= \mathrm{tr}\tilde{\Lambda}^2 + \mathrm{tr}\tilde{\Lambda}^2 - \mathrm{tr}\left(\tilde{\Lambda} D_0 D^{\dagger} \tilde{\Lambda}\right) - \mathrm{tr}\left(\tilde{\Lambda} D D_0^{\dagger} \tilde{\Lambda}\right) \\ &= \mathrm{tr}\left[\left(\tilde{\Lambda} D - \tilde{\Lambda} D_0\right) \times \text{ H.c. }\right] + \mathrm{tr}\left[\tilde{\Lambda}\left(\mathbb{1} - D_0 D_0^{\dagger}\right)\tilde{\Lambda}\right]. \end{aligned}$$

$$\hat{H}_{\mathrm{mol}} = -\sum_{m} \frac{\nabla_m^2}{2M_m} - \sum_{i} \frac{\nabla_i^2}{2} - \sum_{m,i} \frac{Z_m}{|\mathbf{R}_m - \mathbf{r}_i|} + \sum_{m<n} \frac{Z_m Z_n}{|\mathbf{R}_m - \mathbf{R}_n|} + \sum_{i<j} \frac{1}{|\mathbf{r}_i - \mathbf{r}_j|}.$$

$$\hat{H}_{\mathrm{el}} = -\sum_{i} \frac{\nabla_i^2}{2} - \sum_{m,i} \frac{Z_m}{|\mathbf{R}_m - \mathbf{r}_i|} + \sum_{i<j} \frac{1}{|\mathbf{r}_i - \mathbf{r}_j|} + E_{\mathrm{nuc}}.$$

$$\{a_p, a_q\} = 0, \{a_p^{\dagger}, a_q^{\dagger}\} = 0, \{a_p, a_q^{\dagger}\} = \delta_{pq}.$$

$$\hat{H}_{\mathrm{el}} = \sum_{p,q} h_{pq} a_p^{\dagger} a_q + \frac{1}{2} \sum_{p,q,r,s} h_{pqrs} a_p^{\dagger} a_q^{\dagger} a_s a_r,$$

$$h_{pq} = \int \psi_p^*(\mathbf{r}) \left(-\frac{1}{2}\nabla^2 - \sum_{m} \frac{Z_m}{|\mathbf{R}_m - \mathbf{r}|} \right) \psi_q(\mathbf{r}) d\mathbf{r}$$

$$h_{pqrs} = \int \frac{\psi_p^*(\mathbf{r}_1)\psi_q^*(\mathbf{r}_2)\psi_r(\mathbf{r}_1)\psi_s(\mathbf{r}_2)}{|\mathbf{r}_1 - \mathbf{r}_2|} d\mathbf{r}_1 d\mathbf{r}_2$$

$$a_p \mapsto \frac{1}{2}(X_p + iY_p)\bigotimes_{j=0}^{p-1} Z_j, a_p^\dagger \mapsto \frac{1}{2}(X_p - iY_p)\bigotimes_{j=0}^{p-1} Z_j,$$

$$\hat{H} = \sum_i w_i P_i, P_i \in \{\mathbb{I}, X, Y, Z\}^{\otimes N}$$

$$C(\boldsymbol{\theta}) = E(\boldsymbol{\theta}) = \langle \psi(\boldsymbol{\theta}) | \hat{H} | \psi(\boldsymbol{\theta}) \rangle$$

$$C(\boldsymbol{\theta}) = \sum_k \lambda_k \mathrm{Tr}\left[O_k U(\boldsymbol{\theta}) \rho_k U^\dagger(\boldsymbol{\theta})\right]$$

$$\hat{H}_p \mathbf{c} = E_p \mathbf{S}\mathbf{c}$$

$$\left(\hat{H}_p\right)_{ij} = \langle \Phi_i | \hat{H} | \Phi_j \rangle$$

$$S_{ij} = \langle \Phi_i \mid \Phi_j \rangle$$

$$|\Psi_p\rangle = \sum_{i=0}^{d} c_i |\Phi_i\rangle.$$

$$(H_R)_{ij} = \langle x_i | \hat{H} | x_j \rangle, \forall |x_i\rangle, |x_j\rangle \in \mathcal{S}_R$$

$$|\psi_{\text{out}}\rangle = \sum_{i=1}^{R} c_i |x_i\rangle$$

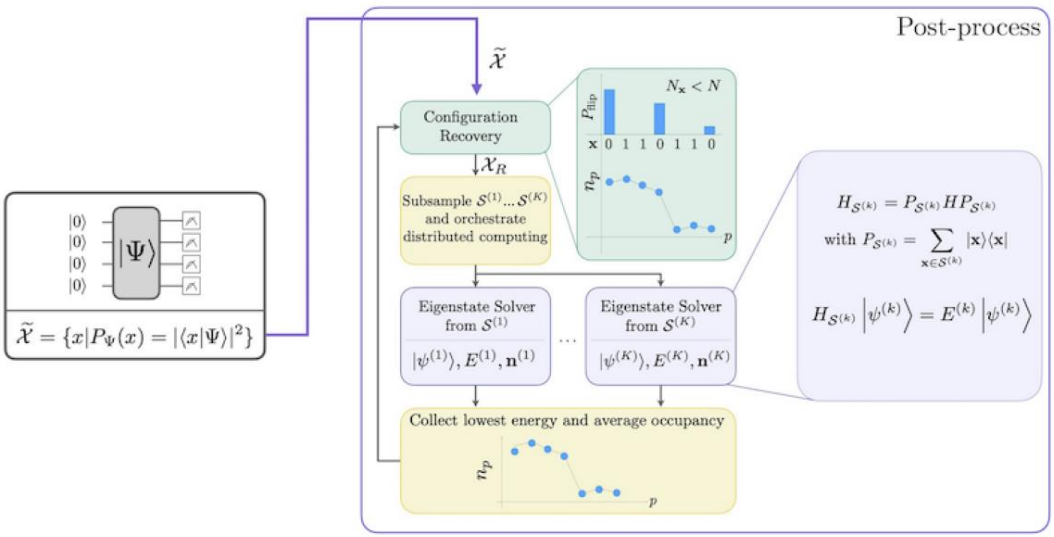

$$H_{\mathcal{S}^{(k)}} = \hat{P}_{\mathcal{S}^{(k)}} \hat{H} \hat{P}_{\mathcal{S}^{(k)}}, \left[H_{\mathcal{S}^{(k)}}\right]_{ij} = \left\langle x_i^{(k)} \middle| \hat{H} \middle| x_j^{(k)} \right\rangle.$$

$$\left|\psi^{(k_{\min})}\right\rangle = \sum_{i=1}^{d} c_i^{(k_{\min})} \left|x_i^{(k_{\min})}\right\rangle$$

$$E(\boldsymbol{\theta}) = \sum_{i=1}^{P} w_i \langle \psi(\boldsymbol{\theta}) | P_i | \psi(\boldsymbol{\theta}) \rangle$$

$$\langle Z \rangle = p_0 - p_1 = 2p_0 - 1.$$

$$\widehat{\langle Z \rangle} = \frac{n_0 - n_1}{N_s},$$

$$X = HZH, Y = SHZHS^{\dagger},$$

$$R_i = \bigotimes_{q=1}^{n} R_i^{(q)}, R_i^{(q)} = \begin{cases} H, & \sigma_i^{(q)} = X, \\ SH, & \sigma_i^{(q)} = Y, \\ I, & \sigma_i^{(q)} = Z \text{ or } I. \end{cases}$$

$$R_i P_i R_i^{\dagger} = Z^{\otimes |\mathcal{S}_i|}$$

$$R_i^{\dagger} U(\boldsymbol{\theta}) |0\rangle^{\otimes n}$$

$$\widehat{\langle P_l \rangle} = \frac{1}{N_s} \sum_{k=1}^{N_s} \prod_{q \in \mathcal{S}_i} (-1)^{b_{k,q}}.$$

$$N_s \leq \left(\frac{\sum_i |w_i|}{\epsilon} \right)^2.$$

$$\epsilon^2 = \sum_{i=1}^{\mathcal{P}} w_i^2 \frac{\mathbb{V}(P_i)}{N_i} = \sum_{i=1}^{\mathcal{P}} w_i^2 \frac{1 - |\langle P_i \rangle|^2}{N_i},$$

$$E(\boldsymbol{\theta}) = C_{\boldsymbol{\theta}}(\rho_0, H) = \mathrm{Tr}\left[H U(\boldsymbol{\theta}) \rho_0 U(\boldsymbol{\theta})^{\dagger} \right].$$

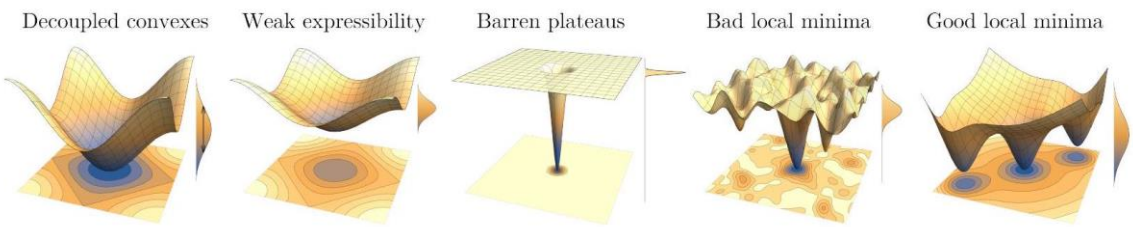

$$\mathrm{Var}_{\boldsymbol{\theta}}[C_{\boldsymbol{\theta}}(\rho_0, H)] \text{ or } \mathrm{Var}_{\boldsymbol{\theta}} \left[\frac{\partial C_{\boldsymbol{\theta}}(\rho_0, H)}{\partial \theta_\mu} \right] \in \mathcal{O}\left(\frac{1}{b^n} \right),$$

$$|C_{\boldsymbol{\theta}}(\rho_0, H) - C_0| \in \mathcal{O}\left(\frac{1}{b^n} \right)$$

$$U(\boldsymbol{\theta}) = \prod_{\ell} e^{-i\theta_\ell H_\ell}$$

$$\mathfrak{g} = \langle \{iH_\ell\} \rangle_{\text{Lie}} \subseteq \mathfrak{su}(\mathcal{H})$$

$$\text{Var}[C_{\boldsymbol{\theta}}(\rho_0, H)] = \frac{\mathcal{P}_{\mathfrak{g}}(\rho_0)\mathcal{P}_{\mathfrak{g}}(H)}{\dim(\mathfrak{g})}$$

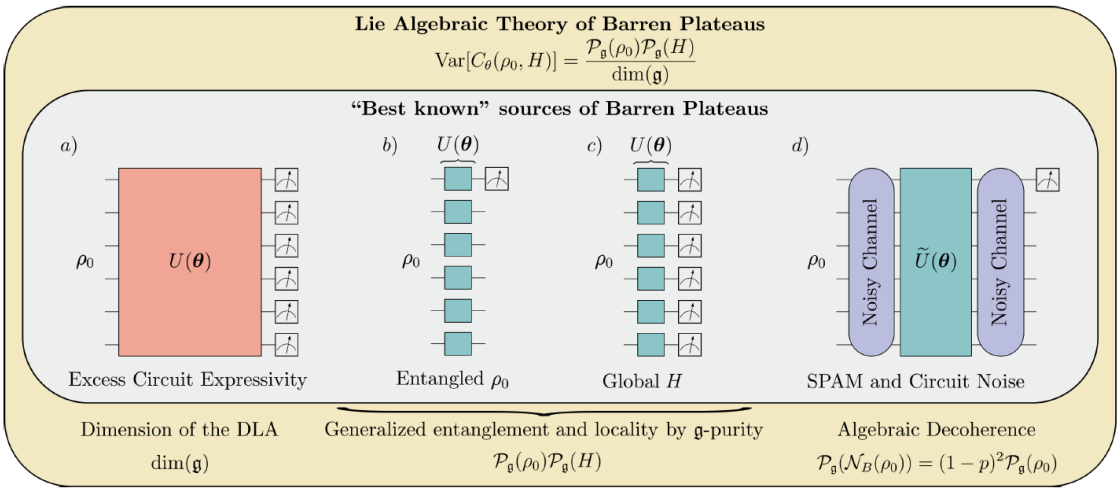

$$|\psi_{\text{GS}}\rangle = \sum_{i=1}^{\dim(\mathcal{A})} c_i|\phi_i\rangle, \mathcal{A} = \text{span}\{|\phi_i\rangle\} \subset \mathcal{H}$$

$$\tilde{M} = \sum_{r=0}^{m-1} (-1)^{m-1-r} \sum_{\substack{J\subseteq\mathcal{S} \\ |J|=r}} \frac{1}{1-\sum_{i\in J} p_i},$$

$$\tilde{M}_{\text{example}} = 1 - \frac{1}{1-a} - \frac{1}{1-b} - \frac{1}{1-c} + \frac{1}{1-a-b} + \frac{1}{1-a-c} + \frac{1}{1-b-c}$$

$$\tilde{M} = mH_m = m\left(1 + \frac{1}{2} + \cdots + \frac{1}{m}\right) \approx m\ln\, m,$$

$$p_{\max} = \max_i p_i.$$

$$q_1 = p_{\max}, q_i = \frac{1-p_{\max}}{m-1} = \tilde{q}(i \geq 2),$$

$$\sum_{\substack{J\subseteq\mathcal{S} \\ |J|=r}} \frac{1}{1-\sum_{i\in J} q_i} = \binom{m-1}{r-1}\frac{1}{1-q_1-(r-1)\tilde{q}} + \binom{m-1}{r}\frac{1}{1-(r)\tilde{q}}$$

$$\sum_{\substack{J\subseteq\mathcal{S} \\ |J|=r}} \frac{1}{1-\sum_{i\in J} q_i} = \binom{m-1}{r-1}\frac{1}{(m-r)\tilde{q}} + \binom{m-1}{r}\frac{1}{1-(r)\tilde{q}}$$

$$\tilde{M} = \sum_{r=0}^{m-1} (-1)^{m-1-r} \left[\binom{m-1}{r-1}\frac{1}{(m-r)\tilde{q}} + \binom{m-1}{r}\frac{1}{1-(r)\tilde{q}}\right]$$

$$\tilde{M}_{\text{example}} = 1 - \frac{1}{2\tilde{q}} - \frac{2}{1-\tilde{q}} + \frac{2}{\tilde{q}} + \frac{1}{1-2\tilde{q}}$$

$$E_{\text{VQE}} = \sum_{i=1}^{K} w_i \langle \psi_{\text{in}} | P_i | \psi_{\text{in}} \rangle,$$

$$\mathcal{S}_{\text{QSCI}} = \{ |\alpha_i \beta_j\rangle | |\alpha_i\rangle \in \mathcal{U}_\alpha, |\beta_j\rangle \in \mathcal{U}_\beta \},$$

$$\mathcal{U}_{\text{tot}} = \mathcal{U}_\alpha \cup \mathcal{U}_\beta.$$

$$\mathcal{S}_{\text{SQD}} = \{ |u_i u_j\rangle \mid u_i, u_j \in \mathcal{U}_{\text{tot}} \},$$

$$\mathrm{i}\partial_t \Psi_N(t) = H_{N,R} \Psi_N(t)$$

$$H_{N,R} = \sum_{j=1}^{N} \left(-\mathrm{i}\nabla_j + \beta N^{s/2-1} \sum_{\substack{k=1 \\ k\neq j}}^{N} \frac{(x_j - x_k)^\perp}{|x_j - x_k|_R^{1+s}} \right)^2 + \frac{g}{2} \sum_{j=1}^{N} \sum_{k=1,k\neq j}^{N} \frac{N^{s-1}}{|x_j - x_k|_R^{2s}}$$

$$\mathbf{a}_R(x) := \frac{x^\perp}{|x|_R^{1+s}} \text{ and } \mathbf{a}_N(x) := N^{s/2-1} \mathbf{a}_R(x)$$

$$\mathbf{B}(x) = \begin{cases} \dfrac{2}{R^{1+s}} & \text{for} \quad x \in B(0,R) \\ \dfrac{1-s}{|x|^{1+s}} & \text{for} \quad x \in B^c(0,R) \end{cases}$$

$$H_{N,R} = \sum_{j=1}^{N} \left(-\mathrm{i}\nabla_j + \beta \sum_{k=1,k\neq j}^{N} \mathbf{a}_N(x_j - x_k) \right)^2 + \frac{g}{2} N \sum_{j=1}^{N} \sum_{k=1,k\neq j}^{N} |\mathbf{a}_N(x_j - x_k)|^2$$

$$\sum_{\substack{k\in\Lambda^* \\ |k|\lesssim 1}} k^2 \simeq N$$

$$\begin{aligned} H_{N,R} = & \sum_{j=1}^{N} -\Delta_j + (gN + \beta^2) \sum_{j\neq k} |\mathbf{a}_N(x_j - x_k)|^2 \text{: Kinetic + Diagonal term} \\ & + \beta \sum_{j\neq k} (-\mathrm{i}\nabla_j) \cdot \mathbf{a}_N(x_j - x_k) + \mathbf{a}_N(x_j - x_k) \cdot (-\mathrm{i}\nabla_j) \text{: Mixed two-body term} \\ & + \beta^2 \sum_{j\neq k\neq l} \mathbf{a}_N(x_j - x_k) \cdot \mathbf{a}_N(x_j - x_l) \text{: Three-body term} \end{aligned}$$

$$\sum_{k=1}^{N} |\mathbf{a}_N(x - x_k)|^2 \sim \int_{\mathbb{R}^2} |\mathbf{a}_N(x-y)|^2 \rho(y) \mathrm{d}y \simeq \int_{B(0,\sqrt{N})} |\mathbf{a}_N(x)|^2 \, \mathrm{d}x \sim N^{-1}$$

$$\sum_{k=1}^{N} \mathbf{a}_N(x - x_k) \sim \int_{\mathbb{R}^2} \mathbf{a}_N(x-y) \rho(y) \mathrm{d}y \simeq \int_{B(0,\sqrt{N})} \mathbf{a}_N(x) \mathrm{d}x \sim 1$$

$$\sum_{k=1}^{N} \mathbf{a}_R(x-x_k)\cdot\nabla_{x_k} \sim \int_{\mathbb{R}^2} \mathbf{a}_R(x-y)\cdot\sum_{k=1}^{N} u_k(y)\nabla_y u_k(y)\mathrm{d}y$$

$$\sim \int_{\mathbb{R}^2} \mathbf{a}_N(x-y)\sqrt{\rho(y)}\sqrt{\sum_{k=1}^{N} \left|\nabla_y u_k(y)\right|^2}\mathrm{d}y$$

$$\sim \left(\int_{B(0,\sqrt{N})} |\mathbf{a}_N(x)|^2\,\mathrm{d}x\right)^{1/2}\left(\int_{\mathbb{R}^2}\sum_{k=1}^{N} \left|\nabla_y u_k(y)\right|^2\,\mathrm{d}x\right)^{1/2} \sim 1$$

$$\gamma_{\Psi_N}(x_1,\dots,x_N,y_1\dots,y_N) = \overline{\Psi_N(x_1,\dots,x_N)}\Psi_N(y_1,\dots,y_N)$$

$$\gamma_{\Psi_N}^{(k)} := \mathrm{tr}_{[k+1,\dots,N]}\left[\gamma_{\Psi_N}\right]$$

$$\gamma_{\Psi_N}^{(k)}(x_1,\dots,x_k,y_1\dots,y_k) = \int_{\mathbb{R}^{2(N-k)}} \overline{\Psi_N(x_1,\dots,x_k,u_{k+1},\dots,u_N)}\Psi_N(y_1,\dots,y_k,u_{k+1},\dots,u_N)\mathrm{d}u_{k+1}\dots\,\mathrm{d}u_N$$

$$\Psi_N^{\mathrm{SL}} := \bigwedge_{j=1}^{N} u_j(0) = \frac{1}{\sqrt{N!}}\sum_{\sigma\in S_N}\mathrm{sgn}(\sigma)\bigotimes_{j=1}^{N} u_{\sigma(j)}(x_j)$$

$$\omega_N^{(k)} := \gamma_{\Psi_N^{\mathrm{SL}}}^{(k)}$$

$$\omega_N^{(1)}(x_1;y_1) = \frac{1}{N}\sum_{j=1}^{N}\overline{\psi_j(x_1)}\psi_j(y_1)$$

$$\omega_N^{(2)}(x_1,x_2;y_1,y_2) = \frac{1}{N(N-1)}\sum_{j=1}^{N}\sum_{k=1}^{N}\overline{\psi_j(x_1)\psi_k(x_2)}\left(\mathbb{1}-U_{jk}\right)\psi_j(y_1)\psi_k(y_2)$$

$$\omega_N^{(3)}(x_1,x_2,x_3;y_1,y_2,y_3) = \frac{1}{N(N-1)(N-2)}\sum_{j=1}^{N}\sum_{k=1}^{N}\sum_{m=1}^{N}\overline{\psi_j(x_1)\psi_k(x_2)\psi_m(x_3)}$$
$$\times\left(\mathbb{1}-U_{jk}-U_{jm}-U_{km}+U_{jk}U_{km}+U_{km}U_{jm}\right)\psi_j(y_1)\psi_k(y_2)\psi_m(y_3)$$

$$\left\langle\Psi_N^{\mathrm{SL}},H_{N,R}\Psi_N^{\mathrm{SL}}\right\rangle = \mathcal{E}_R^{\mathrm{af}}\left[\omega_N^{(1)}\right] + O\left(N^{s(1+2r)}\right)$$

$$\mathcal{E}_R^{\mathrm{af}}[\omega] = \mathrm{Tr}[(-\mathrm{i}\nabla_1+\beta\mathbf{a}_N[\rho_\omega])^2\omega] + \frac{g}{2}N\mathrm{Tr}[\mathbf{a}_N^2[\rho_\omega]\omega]$$

$$\mathrm{i}\partial_t u_j = (-\mathrm{i}\nabla+\beta\mathbf{a}_N[\rho])^2 u_j + gN\mathbf{a}_N^2[\rho]u_j - [\beta\mathbf{a}_N * (2\beta\mathbf{a}_N[\rho]\rho + J)]u_j,$$

$$\omega(t) = \sum_{j=1}^{N}\left|u_j(t)\right\rangle\left\langle u_j(t)\right|, \rho(t) = \sum_{j=1}^{N}\left|u_j(t)\right|^2 \text{ and } J(t) = \sum_{j=1}^{N}\mathrm{i}\left(u_j(t)\nabla\bar{u}_j(t) - \bar{u}_j(t)\nabla u_j(t)\right)$$

$$\rho_\nabla := \sum_{j=1}^{N}\left|\nabla u_j\right|^2 \text{ and } \rho_\Delta := \sum_{j=1}^{N}\left|\Delta u_j\right|^2$$

$$\left\|\gamma_{\Psi_N}^{(1)}(t)-\omega_R(t)\right\|_{\mathrm{tr}} \leq C\left(\frac{1}{\sqrt{N}}+\frac{1}{N^{1-s(1+2r)}}\right)e^{Ct}$$

$$\text{for any } \begin{cases} 0 \leq s(1+2r)+1/2r < 1/4, \\ 0 \leq s < 1/2(1-1/m), \\ 0 \leq s < 1/2, \end{cases}$$

$$\left\|\gamma_{\Psi_N}^{(1)}(t)-\omega_R(t)\right\|_{\mathrm{tr}} \leq C\alpha_m(t)$$

$$|\partial_t \alpha_m(t)| \leq C\|\nabla_2 q_2 \Psi_N\|^2 + C\left(\alpha_m(t)+\frac{1}{\sqrt{N}}\right)$$

$$\|\nabla_2 q_2 \Psi_N\|^2 \leq C\frac{\left|E_N(t)-\mathcal{E}_R^{\mathrm{af}}[\omega(t)]\right|}{N} + C\left(\alpha_m(t)+\frac{1}{\sqrt{N}}\right)$$

$$|\partial_t \alpha_m(t)| \leq C\left(\alpha_m(t)+N^{s(1+2r)-1}+N^{-1/2}\right)$$

$$\left\|\gamma_{\Psi_N}^{(1)}(t)-\omega(t)\right\|_{\mathrm{tr}} \leq C\left(\frac{1}{\sqrt{N}}+\frac{1}{N^{1-s(1+2r)}}+\frac{1}{N^{(1/2+r-s(1+2r))}}\right)e^{Ct}$$

$$\begin{aligned}\left\|\gamma_{\Psi_N}^{(1)}(t)-\omega_R(t)\right\|_{\mathrm{tr}} &= \left\|\gamma_{\Psi_N}^{(1)}(t)-\omega(t)+\omega(t)-\omega_R(t)\right\|_{\mathrm{tr}} \\ &\leq \left\|\gamma_{\Psi_N}^{(1)}(t)-\omega(t)\right\|_{\mathrm{tr}} + \|\omega(t)-\omega_R(t)\|_{\mathrm{tr}} \\ &\leq C\left(\frac{1}{\sqrt{N}}+\frac{1}{N^{1-s(1+2r)}}\right)e^{Ct} + CN^{s-1/2}R^{1-2s}e^{Ct}\end{aligned}$$

$$\langle \Psi_N, A\Psi_N\rangle := \langle A\rangle_{\Psi_N}$$

$$\left|\sum_{j=1}^{N}\left|\langle a_j, b_j\rangle\right|\right|^2 \leq \sum_{j=1}^{N}\|a_j\|^2\sum_{j=1}^{N}\|b_j\|^2, \text{ and } \sum_{j=1}^{N}\left|\langle \omega_j, v\omega_j\rangle\right|^2 \leq \sum_{j=1}^{N}\langle \omega_j, v^2\omega_j\rangle$$

$$f(t) \leq f(0)e^{\int_0^t C(\tau)\mathrm{d}\tau} + \int_0^t \varepsilon(s)e^{\int_s^t C(\tau)\mathrm{d}\tau}\,\mathrm{d}s$$

$$|\partial_t\langle \Psi_N(t), \mathcal{N}_+\Psi_N(t)\rangle| \leq \langle \Psi_N(t), \mathcal{N}_+\Psi_N(t)\rangle + N^{-1/2} + \|\Delta\mathcal{N}_+\Psi_N\|^2$$

$$\|\Delta\mathcal{N}_+\Psi_N\|^2 \leq \left\langle \Psi_N(t), \sqrt{\mathcal{N}_+}\Psi_N(t)\right\rangle + o_N(1)$$

$$\left|\partial_t\left\langle \Psi_N(t), \sqrt{\mathcal{N}_+}\Psi_N(t)\right\rangle\right| \leq \left\langle \Psi_N(t), \sqrt{\mathcal{N}_+}\Psi_N(t)\right\rangle + N^{-1/2} + \|\Delta\mathcal{N}_+\Psi_N\|^2$$

$$p_2 v(x_1-x_2)p_2 \simeq v * \rho$$
$$p_2p_3 w(x_1,x_2,x_3)p_2p_3 \simeq w * \rho * \rho$$

$$\sum_{i,j=1}^{N}|u_j\rangle\left\langle u_j|_y v(x-y) \mid u_i\right\rangle\langle u_i|_y$$

$$p_2p_3 w(x_1,x_2,x_3)p_2p_3 = (p_2 v(x_1-x_2)p_2)(p_3 v(x_1-x_3)p_3)$$

$$p_2p_3 w(x_1,x_2,x_3)p_2p_3 = p_2p_3 v(x_2-x_1)v(x_2-x_3)p_3p_2$$

$$\mathbf{a}_N(x) = N^{s/2-1}\frac{x^{\perp}}{|x|_R^{1+s}}, \text{ for } R = N^{-r}$$

$$\begin{cases} \|\mathbf{a}_N * \rho\|_\infty & \lesssim 1, \\ \|| \mathbf{a}_N * J\|_\infty & \lesssim 1, \text{ for any } 0 \le s < \left(1 - \frac{1}{p}\right) \\ \||\mathbf{a}_N|^2 * \rho\|_\infty & \lesssim N^{-1} \end{cases}$$

$$\||\mathbf{a}_N|^4 * \rho\|_\infty \lesssim N^{-3}, \text{ for any } 0 \le s < \frac{1}{2}\left(1 - \frac{1}{p}\right)$$

$$\left\|\nabla|\mathbf{a}_N|^2 * \sqrt{\rho}\sqrt{\rho_\nabla}\right\|_\infty \lesssim N^{-1}, \text{ for any } 0 \le s(1+2r) + \frac{1}{2}r \le \frac{1}{4}$$

$$\left\||\mathbf{a}_N|^2 * \sqrt{\rho}\sqrt{\rho_\Delta}\right\|_\infty \lesssim N^{-1}, \text{ for any } 0 \le s < \left(1 - \frac{1}{p}\right)$$

$$\||\mathbf{a}_N|^2 * \rho_\nabla\|_\infty \lesssim N^{-1}, \text{ for any } 0 \le s < \left(1 - \frac{1}{p}\right)$$

$$\left\|\mathbf{a}_N \mathbb{1}_{B(0,\sqrt{N})}\right\|_q \lesssim N^{s/2-1}\left(\int_0^{\sqrt{N}} r^{1-qs}\,\mathrm{d}r\right)^{1/q} = N^{1/q-1}$$

$$1/q + 1/p = 1$$

$$\begin{aligned} \|\mathbf{a}_N * \rho\|_\infty &= \left\|\mathbf{a}_N\left(\mathbb{1}_{B(0,\sqrt{N})} + \mathbb{1}_{B(\sqrt{N},+\infty)}\right) * \rho\right\|_\infty \\ &\le \left\|\mathbf{a}_N \mathbb{1}_{B(0,K)}\right\|_q \|\rho\|_p + \frac{N^{s/2-1}}{K^s}\|\rho\|_1 \\ &\lesssim N^{1/q-1}N^{1/p} + 1 \\ &\lesssim 1 \end{aligned}$$

$$\begin{aligned} \||\mathbf{a}_N|^2 * \rho\|_\infty &\le \left\||\mathbf{a}_N|^2 \mathbb{1}_{B(0,\sqrt{N})}\right\|_q \|\rho\|_p + N^{s-2}N^{-s}\|\rho\|_1 \\ &\lesssim N^{1/p}\left\|\mathbf{a}_N \mathbb{1}_{B(0,\sqrt{N})}\right\|_{2q}^2 + N^{-1} \\ &\lesssim N^{-1} \end{aligned}$$

$$\begin{aligned} \||\mathbf{a}_N|^4 * \rho\|_\infty &\le \left\||\mathbf{a}_N|^4 \mathbb{1}_{B(0,\sqrt{N})}\right\|_q \|\rho\|_p + N^{-2s}N^{2s-4}\|\rho\|_1 \\ &\lesssim N^{1/p}\left\|\mathbf{a}_N \mathbb{1}_{B(0,\sqrt{N})}\right\|_{4q}^4 + N^{-3} \\ &\lesssim N^{-3} \end{aligned}$$

$$|J| = \left|\sum_{j=1}^{N} \mathrm{i}\left(u_j \nabla \bar{u}_i - \bar{u}_j \nabla u_j\right)\right| \lesssim \sum_{j=1}^{N} |u_j||\nabla \bar{u}_i| \le \sqrt{\rho}\sqrt{\rho_\nabla}$$

$$
\begin{aligned}
\||\mathbf{a}_N| * J\|_\infty &\le \left\| |\mathbf{a}_N| \mathbb{1}_{B(0,\sqrt{N})} * |J| \right\|_\infty + \left\| |\mathbf{a}_N|^2 \mathbb{1}_{B^c(0,\sqrt{N})} * J \right\|_\infty \\
&\le \left\| |\mathbf{a}_R| \mathbb{1}_{B(0,\sqrt{N})} \right\|_q \|J\|_p + N^{-1} \|J\|_1 \\
&\lesssim N^{1/q-1} \left\| \sqrt{\rho}\sqrt{\rho_\nabla} \right\|_p + N^{-1} \left\| \sqrt{\rho}\sqrt{\rho_\nabla} \right\|_1 \\
&\lesssim N^{1/q-1} \|\rho\|_{\frac{p}{2-p}}^{\frac{1}{2}} \left\| \sqrt{\rho_\nabla} \right\|_2 + N^{-1} \|\rho + \rho_\nabla\|_1 \\
&\lesssim N^{1/q-1} N^{\frac{2-p}{2p}} \|\rho_\nabla\|_1^{\frac{1}{2}} + 1 \\
&\lesssim N^{1/q+1/p-1} + 1 \lesssim 1
\end{aligned}
$$

$$
\begin{aligned}
\left\| |\mathbf{a}_N|^2 * \sqrt{\rho}\sqrt{\rho_\Delta} \right\|_\infty &\le \left\| |\mathbf{a}_N|^2 \mathbb{1}_{B(0,\sqrt{N})} * \sqrt{\rho}\sqrt{\rho_\Delta} \right\|_\infty + \left\| |\mathbf{a}_N|^2 \mathbb{1}_{B^c(0,\sqrt{N})} * \sqrt{\rho}\sqrt{\rho_\Delta} \right\|_\infty \\
&\le \left\| |\mathbf{a}_N|^2 \mathbb{1}_{B(0,\sqrt{N})} \right\|_q \left\| \sqrt{\rho}\sqrt{\rho_\Delta} \right\|_p + N^{-2} \left\| \sqrt{\rho}\sqrt{\rho_\Delta} \right\|_1 \\
&\lesssim N^{1/q-2} \|\rho\|_{\frac{p}{2-p}}^{\frac{1}{2}} \left\| \sqrt{\rho_\Delta} \right\|_2 + N^{-1} \\
&\lesssim N^{1/q+1/p-2} + N^{-1} \lesssim N^{-1}
\end{aligned}
$$

$$
\nabla |\mathbf{a}_R|^2 = \frac{2x \mathbb{1}_{B(0,R)}}{R^{2(1+s)}} + \frac{2x \mathbb{1}_{B^c(0,R)}}{|x|^{2(1+s)}}
$$

$$
\begin{aligned}
\left\| \nabla |\mathbf{a}_N|^2 * \sqrt{\rho}\sqrt{\rho_\nabla} \right\|_\infty \lesssim & N^{s-2} \left\| R^{-2(1+s)} |x| \mathbb{1}_{B(0,R)} + |x|^{-1-2s} \mathbb{1}_{B(R,\sqrt{N})} \right\|_4 \left\| \sqrt{\rho}\sqrt{\rho_\nabla} \right\|_{4/3} \\
& + N^{-5/2} \left\| \sqrt{\rho}\sqrt{\rho_\nabla} \right\|_1 \\
\lesssim & N^{s-2} \left(\int_R^{\sqrt{N}} r^{-3-8s} \, \mathrm{d}r \right)^{1/4} \|\rho\|_2^{\frac{1}{2}} \left\| \sqrt{\rho_\nabla} \right\|_2 \\
& + N^{s-2} R^{-2(1+s)} \left(\int_0^R r^5 \, \mathrm{d}r \right)^{1/4} \|\rho\|_2^{\frac{1}{2}} \left\| \sqrt{\rho_\nabla} \right\|_2 + N^{-3/2} \\
\lesssim & N^{s-2} R^{-1/2-2s} N^{3/4} + N^{-3/2} \lesssim N^{-1}
\end{aligned}
$$

$$
\mathcal{E}_R^{\mathrm{af}}[\omega(t)] := \sum_{j=1}^N \mathcal{E}_R^{\mathrm{af}}[u_j(t)] = \sum_{j=1}^N \int_{\mathbb{R}^2} \left| D_u^R u_j \right|^2 + \frac{g}{2} N \int_{\mathbb{R}^2} \mathbf{a}_N^2[\rho] \rho
$$

$$
\mathrm{i}\partial_t u_j = \mathcal{H}_R u_j
$$

$$
\begin{aligned}
\mathcal{A}_R &:= -\beta \mathbf{a}_N * (2\beta \mathbf{a}_N[\rho]\rho + \hbar J) + gN \mathbf{a}_N^2[\rho] \\
&=: -\beta \mathbf{a}_N * \mathcal{J}_u^R + gN \mathbf{a}_N^2[\rho]
\end{aligned}
$$

$$
\partial_t \int \left| u_j \right|^2 = 0 \Rightarrow \partial_t \int \rho_u = 0
$$

$$
\int \left(\partial_t \left| u_j \right|^2 + \nabla \cdot \mathbf{J}_j^R \right) = 0 \Rightarrow \int \left(\partial_t \rho_u + \nabla \cdot \mathcal{J}_u^R \right) = 0
$$

$$
\mathcal{E}_R^{\mathrm{af}}[\omega(t)] = \mathcal{E}_R^{\mathrm{af}}[\omega(0)]
$$

$$
2 \sum_{j=1}^N \mathbf{J}_j^R = 2 \sum_{j=1}^N \mathrm{Re}\left(\bar{u}_j D_u^R u_j \right) = \mathcal{J}_u^R
$$

$$-\int_{\mathbb{R}^2} (\mathcal{J}_u^R * \mathbf{a}_N)\partial_t\rho_u = \int_{\mathbb{R}^2} \mathcal{J}_u^R \cdot (\mathbf{a}_N * \partial_t\rho_u) = \int_{\mathbb{R}^2} \mathcal{J}_u^R \cdot \partial_t(\mathbf{a}_N[\rho_u])$$

$$\begin{aligned} 0 = 2\mathrm{Re}i\partial_t|u_j|^2 &= 2\mathrm{Re}\int_{\mathbb{R}^2} \left(D_u^R u_j\right)^* D_u^R \partial_t u_j + \int_{\mathbb{R}^2} \mathcal{A}_R \partial_t |u_j|^2 \\ &= \partial_t \int_{\mathbb{R}^2} |D_u^R u_j|^2 - 2\int_{\mathbb{R}^2} \mathbf{J}_j^R \cdot \partial_t(\beta \mathbf{a}_N[\rho_u]) + \int_{\mathbb{R}^2} \mathcal{A}_R \partial_t |u_j|^2 \end{aligned}$$

$$\partial_t \int_{\mathbb{R}^2} |D_u^R u_j|^2 = 2\mathrm{Re}\int_{\mathbb{R}^2} \left((-\mathrm{i}\nabla + \beta\mathbf{a}_N[\rho_u])u_j\right)^* (-\mathrm{i}\nabla + \beta\mathbf{a}_N[\rho_u])\partial_t u_j + 2\int_{\mathbb{R}^2} \mathbf{J}_j^R \cdot \partial_t(\beta\mathbf{a}_N[\rho_u])$$

$$\begin{aligned} 0 &= \partial_t \mathcal{E}_R^{\mathrm{af}}[\omega(t)] - \int_{\mathbb{R}^2} \mathcal{J}_u^R \cdot \partial_t(\beta\mathbf{a}_N[\rho_u]) - gN\int_{\mathbb{R}^2} \mathbf{a}_N^2[\rho_u]\partial_t\rho_u + \int_{\mathbb{R}^2} \mathcal{A}_R \partial_t \rho_u \\ &= \partial_t \mathcal{E}_R^{\mathrm{af}}[\omega(t)] \end{aligned}$$

$$\langle \Psi_N(0), H_{N,R}\Psi_N(0)\rangle \le CN$$

$$\sum_{j=1}^N \int_{\mathbb{R}^2} |\nabla u_j(t)|^2 \le C'N \text{ and } \int_{\mathbb{R}^2} \rho(t)^2 \le C'N$$

$$\begin{aligned} CN \ge \langle \Psi_N(0), H_{N,R}\Psi_N(0)\rangle &= \mathcal{E}_R^{\mathrm{af}}[\omega(0)] + O\left(N^{s(1+2r)}\right) \\ &= \mathcal{E}_R^{\mathrm{af}}[\omega(t)] + O\left(N^{s(1+2r)}\right) \\ &= \sum_{j=1}^N \int_{\mathbb{R}^2} |D_u^R u_j(t)|^2 + N\frac{g}{2}\mathrm{tr}[\mathbf{a}_N^2[\rho_u(t)]\omega] + O\left(N^{s(1+2r)}\right). \end{aligned}$$

$$|-\mathrm{i}\nabla u_j(t) \cdot \mathbf{a}_N[\rho_u(t)]u_j| \le \frac{1}{4}|\nabla u_j(t)|^2 + 4|\mathbf{a}_N[\rho_u(t)]|^2|u_j|^2$$

$$|D_u^R u_j(t)|^2 \ge \frac{1}{2}|\nabla u_j(t)|^2 - 7\beta^2|\mathbf{a}_N[\rho_u(t)]|^2|u_j|^2$$

$$\begin{aligned} CN &\ge \frac{1}{2}\sum_{j=1}^N \int_{\mathbb{R}^2} |\nabla u_j(t)|^2 - 7\beta^2 \int_{\mathbb{R}^2} |\mathbf{a}_N[\rho_u(t)]|^2 \rho_u(t) \\ &\ge c\|\rho_u(t)\|_2^2 - 7\beta^2 N\||\mathbf{a}_N| * \rho_u(t)\|_\infty^2 \\ &\ge c\|\rho_u(t)\|_2^2 - 7\beta^2 N\left\||\mathbf{a}_N|\mathbb{1}_{B(0,\sqrt{N})} * \rho_u(t)\right\|_\infty^2 - 7\beta^2 N^2 N^{-s} N^{s-2} \\ &\ge c\|\rho_u(t)\|_2^2 - 7\beta^2 N\left\||\mathbf{a}_N|\mathbb{1}_{B(0,\sqrt{N})}\right\|_2^2 \|\rho_u(t)\|_2^2 - 7\beta^2 N \\ &\ge (c - 14\pi\beta^2)\|\rho_u(t)\|_2^2 - 7\beta^2 N \end{aligned}$$

$$\|\rho_u(t)\|_2^2 \le \frac{C - 14\pi\beta^2}{c - 7\beta^2} N \le C'N$$

$$N\||\mathbf{a}_N| * \rho_u(t)\|_\infty^2 \le N + \left\||\mathbf{a}_N|\mathbb{1}_{B(0,\sqrt{N})}\right\|_2^2 \|\rho_u(t)\|_2^2 \le N + CN^{s-2}N^{2-s}N \le CN$$

$$(C - \beta^2 C'')N \ge \frac{1}{2}\sum_{j=1}^N \int_{\mathbb{R}^2} |\nabla u_j(t)|^2$$

$$\left\|\mathbf{a}_N^0[\rho_v]-\mathbf{a}_N[\rho_u]\right\|_\infty \lesssim N^{s/2-1/2}R^{1-s}+N^{-1/2}\sqrt{\sum_{j=1}^{N}\left\|u_j-v_j\right\|_2^2}$$

$$\left\|\left|\mathbf{a}_N^0\right|^2*\rho_v-|\mathbf{a}_N|^2*\rho_u\right\|_\infty \lesssim N^{-1}\left(N^{s-1/2}R^{1-2s}+N^{-1/2}\sqrt{\sum_{j=1}^{N}\left\|u_j-v_j\right\|_2^2}\right)$$

$$\left\|\mathbf{a}_N*(\mathbf{a}_N[\rho_R]\rho_R-\mathbf{a}_N^0[\rho]\rho)\right\|_\infty \lesssim \left\|\mathbf{a}_N^0[\rho_v]-\mathbf{a}_N[\rho_u]\right\|_\infty$$

$$\begin{aligned}\left\|\mathbf{a}_N^0[\rho_v]-\mathbf{a}_N[\rho_u]\right\|_\infty &= \left\|(\mathbf{a}_N^0-\mathbf{a}_N)*\rho_v-\mathbf{a}_N*(\rho_u-\rho_v)\right\|_\infty\\ &\le a^{(1)}+a^{(2)}\end{aligned}$$

$$\begin{aligned}a^{(1)}:=\left\|(\mathbf{a}_N^0-\mathbf{a}_N)*\rho_v\right\|_\infty &\le N^{-1+s/2}\left\||x|^{-s}\mathbb{1}_{B(0,R)}*\rho_v\right\|_\infty\\ &\le N^{-1+s/2}\|\rho_v\|_2\left(\int_0^R r^{1-2s}\,\mathrm{d}r\right)^{1/2}\\ &\le N^{-1/2+s/2}R^{1-s}\end{aligned}$$

$$\begin{aligned}a^{(2)}&:=\|\mathbf{a}_N*(\rho_u-\rho_v)\|_\infty\\ &\le N^{-1+s/2}\left\|\,|x|^{-s}*\sum_{j=1}^{N}(u_j-v_j)\overline{u_j}-v_j(\bar{v}_j-\bar{u}_j)\right\|_\infty\\ &\lesssim N^{-1+s/2}\left\|\,|x|^{-s}\mathbb{1}_{B(0,\sqrt{N})}*\sqrt{\rho}\sqrt{\sum_{j=1}^{N}\left|u_j-v_j\right|^2}\right\|_\infty+N^{-1+s/2}N^{-s/2}\left\|\sqrt{\rho}\sqrt{\sum_{j=1}^{N}\left|u_j-v_j\right|^2}\right\|_1\end{aligned}$$

$$\begin{aligned}a^{(2)}&\lesssim N^{-1+s/2}\left\|\,|x|^{-s}\mathbb{1}_{B(0,\sqrt{N})}\right\|_4\left\|\sqrt{\rho}\sqrt{\sum_{j=1}^{N}\left|u_j-v_j\right|^2}\right\|_{4/3}+N^{-1}\|\sqrt{\rho}\|_2\sqrt{\sum_{j=1}^{N}\left\|u_j-v_j\right\|_2^2}\\ &\lesssim\left(N^{-1+s/2}\left(\int_0^{\sqrt{N}}r^{1-4s}\,\mathrm{d}r\right)^{1/4}\|\sqrt{\rho}\|_4+N^{-1}\sqrt{N}\right)\sqrt{\sum_{j=1}^{N}\left\|u_j-v_j\right\|_2^2}\\ &\lesssim N^{-1/2}\sqrt{\sum_{j=1}^{N}\left\|u_j-v_j\right\|_2^2}\end{aligned}$$

$$\begin{aligned}\left\|\left|\mathbf{a}_N^0\right|^2*\rho_v-|\mathbf{a}_N|^2*\rho_u\right\|_\infty &= \left\|\left(\left|\mathbf{a}_N^0\right|^2-|\mathbf{a}_N|^2\right)*\rho_v-|\mathbf{a}_N|^2*(\rho_u-\rho_v)\right\|_\infty\\ &\le b^{(1)}+b^{(2)}\end{aligned}$$

$$\begin{aligned}b^{(1)}:=\left\|\left(\left|\mathbf{a}_N^0\right|^2-|\mathbf{a}_N|^2\right)*\rho_v\right\|_\infty &\le N^{-2+s}\left\||x|^{-2s}\mathbb{1}_{B(0,R)}*\rho_v\right\|_\infty\\ &\le N^{-2+s}\|\rho_v\|_2\left(\int_0^R r^{1-4s}\,\mathrm{d}r\right)^{1/2}\\ &\le N^{-2+s}R^{1-2s}\end{aligned}$$

$$b^{(2)} := \||\mathbf{a}_N|^2 * (\rho_u - \rho_v)\|_\infty$$

$$\lesssim N^{-1+s/2} \left\| |x|^{-2s} \mathbb{1}_{B(0,\sqrt{N})} \right\|_4 \left\| \sqrt{\rho} \sqrt{\sum_{j=1}^N |u_j - v_j|^2} \right\|_{4/3} + N^{-1} \|\sqrt{\rho}\|_2 \sqrt{\sum_{j=1}^N \|u_j - v_j\|_2^2}$$

$$\lesssim N^{-1} N^{-1/2} \sqrt{\sum_{j=1}^N \|u_j - v_j\|_2^2}$$

$$\begin{aligned}
\left\| \mathbf{a}_N * (\mathbf{a}_N[\rho_u]\rho_u - \mathbf{a}_N^0[\rho_v]\rho_v) \right\|_\infty &\lesssim \left\| \mathbf{a}_N * (\mathbf{a}_N[\rho_u] - \mathbf{a}_N^0[\rho_v])\rho_v \right\|_\infty \\
&\quad + \left\| \mathbf{a}_N * \left(\mathbf{a}_N^0[\rho_v](\rho_v - \rho_u) \right) \right\|_\infty \\
&\lesssim \|\mathbf{a}_N[\rho_u] - \mathbf{a}_N[\rho_v]\|_\infty \|\mathbf{a}_N \,|* \rho_v\|_\infty \\
&\quad + \|\mathbf{a}_N * |\rho_v - \rho_u|\|_\infty \left\| \mathbf{a}_N^0[\rho_v] \right\|_\infty \\
&\lesssim N^{s/2-1/2} R^{1-s} + 2N^{-1/2} \sqrt{\sum_{j=1}^N \|u_j - v_j\|_2^2}
\end{aligned}$$

$$\left| \frac{1}{N} \partial_t \sum_{j=1}^N \|u_j - u_j^R\|_2^2 \right| \lesssim N^{2s-1} R^{2-4s} + \frac{1}{N} \sum_{j=1}^N \|u_j - u_j^R\|_2^2$$

$$\frac{1}{N} \sum_{j=1}^N \|u_j - u_j^R\|_2^2 \leq C N^{2s-1} R^{2-4s} e^{Ct}$$

$$\mathrm{tr}|\omega_R(t) - \omega(t)| \leq \frac{1}{N} \sum_{j=1}^N \|u_j - u_j^R\|_2 \leq C N^{s-1/2} R^{1-2s} e^{Ct}$$

$$\rho := \sum_{j=1}^N |u_j|^2, \text{ and } \rho_R := \sum_{j=1}^N |u_j^R|^2$$

$$J := \sum_{j=1}^N \mathrm{i}(u_j \nabla \bar{u}_j - \bar{u}_j \nabla u_j), J_R := \sum_{j=1}^N \mathrm{i}(u_j^R \nabla \bar{u}_j^R - \bar{u}_j^R \nabla u_j^R).$$

$$\mathcal{E}_R := (-\mathrm{i}\nabla + \mathbf{a}_N[\rho_R])^2 \text{ and } \mathcal{A}_R := [\mathbf{a}_N * (2\mathbf{a}_N[\rho_R]\rho_R + J_R)] + gN\mathbf{a}_N^2[\rho_R]$$

$$\mathrm{i}\partial_t u_j^R = (\mathcal{E}_R + \mathcal{A}_R) u_j^R$$

$$\begin{aligned}
\partial_t \|u_j - u_j^R\|_2^2 &= 2\mathrm{Im}\left[\langle (\mathcal{E} + \mathcal{A}) u_j, u_j^R \rangle + \langle (\mathcal{E}_R + \mathcal{A}_R) u_j^R, u_j \rangle\right] \\
&= 2\mathrm{Im}\left[\langle (\mathcal{E} + \mathcal{A}) u_j, (u_j^R - u_j) \rangle - \langle (\mathcal{E}_R + \mathcal{A}_R) u_j^R, (u_j^R - u_j) \rangle\right] \\
&=: E_j + A_j
\end{aligned}$$

$$\begin{aligned}
E_j &:= 2\mathrm{Im}\langle (\mathcal{E}_R - \mathcal{E}) u_j^R, (u_j - u_j^R) \rangle \\
A_j &:= 2\mathrm{Im}\langle (\mathcal{A}_R - \mathcal{A}^0) u_j^R, (u_j - u_j^R) \rangle.
\end{aligned}$$

$$\|\rho_R\|_1 \simeq \|\rho_R\|_2^2 \lesssim N, \sum_{j=1}^{N} \left\|\nabla u_j^R\right\|_2^2 \lesssim N, \|J_R\|_{4/3} \lesssim N^{3/4}, \text{ and } \|\mathbf{a}_N[\rho_R]\|_\infty \lesssim 1$$

$$\begin{aligned}
\left|\sum_{j=1}^{N} E_j\right| &\leq 2\left|\left\langle \sum_{j=1}^{N} -\mathrm{i}\nabla u_j^R, (\mathbf{a}_N^0[\rho] - \mathbf{a}_N[\rho_R])\left(u_j^R - u_j\right)\right\rangle\right| \\
&\quad + \left|\left\langle \sum_{j=1}^{N} (\mathbf{a}_N^0[\rho] + \mathbf{a}_N[\rho_R])u_j^R, (\mathbf{a}_N^0[\rho] - \mathbf{a}_N[\rho_R])\left(u_j^R - u_j\right)\right\rangle\right| \\
&\lesssim \left|\left\langle \sqrt{\sum_{j=1}^{N} \left|\nabla u_j^R\right|^2}, (\mathbf{a}_N^0[\rho] - \mathbf{a}_N[\rho_R]) \sqrt{\sum_{j=1}^{N} \left|u_j^R - u_j\right|^2}\right\rangle\right| \\
&\quad + \left\|\mathbf{a}_N^0[\rho]\right\|_\infty \left|\left\langle \sqrt{\rho_R}, (\mathbf{a}_N^0[\rho] - \mathbf{a}_N[\rho_R]) \sqrt{\sum_{j=1}^{N} \left|u_j^R - u_j\right|^2}\right\rangle\right| \\
&\lesssim \left\|\mathbf{a}_N^0[\rho] - \mathbf{a}_N[\rho_R]\right\|_\infty \sqrt{\sum_{j=1}^{N} \left\|\nabla u_j^R\right\|_2^2} \sqrt{\sum_{j=1}^{N} \left\|u_j^R - u_j\right\|_2^2} \\
&\quad + \left\|\mathbf{a}_N^0[\rho] - \mathbf{a}_N[\rho_R]\right\|_\infty \sqrt{\sum_{j=1}^{N} \left\|u_j^R - u_j\right\|_2^2} \sqrt{\|\rho_R\|_1} \\
&\lesssim N \sqrt{\sum_{j=1}^{N} \left\|u_j^R - u_j\right\|_2^2} \left(N^{s/2-1}R^{1-s} + N^{-1}\sqrt{\sum_{j=1}^{N} \left\|u_j - u_j^R\right\|_2^2}\right)
\end{aligned}$$

$$N^{-1}\left|\sum_{j=1}^{N} E_j\right| \lesssim N^{s-1}R^{2-2s} + N^{-1}\sum_{j=1}^{N} \left\|u_j - u_j^R\right\|_2^2$$

$$\begin{aligned}
A_j &= \left\langle (\mathcal{A} - \mathcal{A}_R)u_j^R, \left(u_j - u_j^R\right)\right\rangle \\
&= \left\langle (\mathbf{a}_N^0 - \mathbf{a}_N) * (2\mathbf{a}_N^0[\rho]\rho + J[u]), \overline{u_j}^R\left(u_j - u_j^R\right)\right\rangle \\
&\quad + \left\langle \mathbf{a}_N * 2(\mathbf{a}_N[\rho_R]\rho_R - \mathbf{a}_N^0[\rho]\rho), \overline{u_j}^R\left(u_j - u_j^R\right)\right\rangle \\
&\quad + \left\langle \mathbf{a}_N * \left[J[u] - J[u^R]\right], \overline{u_j}^R\left(u_j - u_j^R\right)\right\rangle \\
&\quad + gN\left\langle |\mathbf{a}_N^0|^2 * \rho - |\mathbf{a}_N|^2 * \rho_R, \overline{u_j}^R\left(u_j - u_j^R\right)\right\rangle \\
&:= A_j^{(1)} + A_j^{(2)} + A_j^{(3)} + A_j^{(4)}
\end{aligned}$$

$$\left|\sum_{j=1}^{N} A_j^{(1)}\right| \leq \left|\left\langle \left|\mathbf{a}_N^0 - \mathbf{a}_N\right| * \left|2\mathbf{a}_N^0[\rho]\rho + J[u]\right|, \sqrt{\rho_R}\sqrt{\sum_{j=1}^{N}\left|u_j - u_j^R\right|^2}\right\rangle\right|$$

$$\leq \sqrt{\sum_{j=1}^{N}\left\|u_j - u_j^R\right\|_2^2 \left\|\sqrt{\rho_R}\right\|_4 \left\|\left|\mathbf{a}_N^0 - \mathbf{a}_N\right| * \left|2\mathbf{a}_N^0[\rho]\rho + J[u]\right|\right\|_4}$$

$$\leq N^{1/4-1+s/2}\sqrt{\sum_{j=1}^{N}\left\|u_j - u_j^R\right\|_2^2}\left\|\left|x\right|^{-s}\mathbb{1}_{B(0,R)}\right\|_2 \left\|\mathbf{a}_N^0[\rho]\rho + J[u]\right\|_{4/3}$$

$$\leq N^{1/4-1+s/2}R^{1-s}\sqrt{\sum_{j=1}^{N}\left\|u_j - u_j^R\right\|_2^2}\left(\left\|\mathbf{a}_N^0[\rho]\rho\right\|_{4/3} + \|J[u]\|_{4/3}\right)$$

$$\leq N^{1/4-1+s/2}R^{1-s}\sqrt{\sum_{j=1}^{N}\left\|u_j - u_j^R\right\|_2^2}\left(\left\|\mathbf{a}_N^0[\rho]\right\|_\infty \|\rho\|_{4/3} + N^{3/4}\right) \leq N^{s/2}R^{1-s}\sqrt{\sum_{j=1}^{N}\left\|u_j - u_j^R\right\|_2^2}$$

$$N^{-1}\left|\sum_{j=1}^{N} A_j^{(1)}\right| \leq N^{s-1}R^{2-2s} + \frac{1}{N}\sum_{j=1}^{N}\left\|u_j - u_j^R\right\|_2^2$$

$$\left|\sum_{j=1}^{N} A_j^{(2)}\right| \leq 2\left|\left\langle \mathbf{a}_N * (\mathbf{a}_N[\rho_R]\rho_R - \mathbf{a}_N^0[\rho]\rho), \sqrt{\rho_R}\sqrt{\sum_{j=1}^{N}\left|u_j - u_j^R\right|^2}\right\rangle\right|$$

$$\lesssim N^{1/2}\sqrt{\sum_{j=1}^{N}\left\|u_j - u_j^R\right\|_2^2}\left\|\mathbf{a}_N * (\mathbf{a}_N[\rho_R]\rho_R - \mathbf{a}_N^0[\rho]\rho)\right\|_\infty$$

$$\lesssim N^{1/2}\sqrt{\sum_{j=1}^{N}\left\|u_j - u_j^R\right\|_2^2}\left(N^{s/2-1/2}R^{1-s} + N^{-1/2}\sqrt{\sum_{j=1}^{N}\left\|u_j - u_j^R\right\|_2^2}\right)$$

$$N^{-1}\left|\sum_{j=1}^{N} A_j^{(2)}\right| \lesssim N^{s-1}R^{2(1-s)} + \frac{1}{N}\sum_{j=1}^{N}\left\|u_j - u_j^R\right\|_2^2$$

$$\left|\sum_{j=1}^{N} A_j^{(3)}\right| \leq \left|\left\langle \mathbf{a}_N * \left[J[u]-J[u^R]\right], \sqrt{\rho_R}\sqrt{\sum_{j=1}^{N}\left|u_j-u_j^R\right|^2}\right\rangle\right|$$

$$= \left|\left\langle \left[J[u]-J[u^R]\right], \mathbf{a}_N * \sqrt{\rho_R}\sqrt{\sum_{j=1}^{N}\left|u_j-u_j^R\right|^2}\right\rangle\right|$$

$$\lesssim \left|\left\langle \sum_{j=1}^{N}\left|u_j-u_j^R\right|\left|\nabla u_j\right|, \mathbf{a}_N * \sqrt{\rho_R}\sqrt{\sum_{j=1}^{N}\left|u_j-u_j^R\right|^2}\right\rangle\right|$$

$$J[u]-J[u^R] = \sum_{j=1}^{N}\left(u_j-u_j^R\right)\nabla\bar{u}_j + u_j^R\nabla\overline{\left(u_j-u_j^R\right)} + \overline{\left(u_j^R-u_j\right)}\nabla u_j^R + \bar{u}_j^R\nabla\left(u_j^R-u_j\right)$$

$$\left|\sum_{j=1}^{N} A_j^{(3)}\right| \lesssim \left|\left\langle \sqrt{\sum_{j=1}^{N}\left|u_j-u_j^R\right|^2}\sqrt{\sum_{j=1}^{N}\left|\nabla u_j\right|^2}, \mathbf{a}_N * \sqrt{\rho_R}\sqrt{\sum_{j=1}^{N}\left|u_j-u_j^R\right|^2}\right\rangle\right|$$

$$\lesssim \left\|\sqrt{\sum_{j=1}^{N}\left|\nabla u_j\right|^2}\right\|\left\|\sqrt{\sum_{j=1}^{N}\left|u_j-u_j^R\right|^2}\right\|_2\left\|\mathbf{a}_N * \sqrt{\rho_R}\sqrt{\left|\sum_{j=1}^{N}\left|u_j-u_j^R\right|^2\right|}\right\|_\infty$$

$$\leq a^{(2)}\sqrt{\sum_{j=1}^{N}\left\|\nabla u_j\right\|_2^2}\sqrt{\sum_{j=1}^{N}\left\|u_j-u_j^R\right\|_2^2} \lesssim N^{-1/2}\sqrt{N}\sum_{j=1}^{N}\left\|u_j-u_j^R\right\|_2^2$$

$$\left|\sum_{j=1}^{N} A_j^{(4)}\right| \lesssim gN\left|\left\langle\left|\mathbf{a}_N^0\right|^2 * \rho - \left|\mathbf{a}_N\right|^2 * \rho_R, \bar{u}_j^R\left(u_j-u_j^R\right)\right\rangle\right|$$

$$\lesssim NN^{1/2}\sqrt{\sum_{j=1}^{N}\left\|u_j-u_j^R\right\|_2^2}\left\|\left|\mathbf{a}_N^0\right|^2 * \rho - \left|\mathbf{a}_N\right|^2 * \rho_R\right\|_\infty$$

$$\lesssim N^{1/2}\sqrt{\sum_{j=1}^{N}\left\|u_j-u_j^R\right\|_2^2}\left(N^{s-1/2}R^{1-2s} + N^{-1/2}\sqrt{\sum_{j=1}^{N}\left\|u_j-u_j^R\right\|_2^2}\right)$$

$$\left|\partial_t\frac{1}{N}\sum_{j=1}^{N}\left\|u_j-u_j^R\right\|_2^2\right| = \frac{1}{N}\left|\sum_{j=1}^{N}E_j + A_j^{(1)} + A_j^{(2)} + A_j^{(3)} + A_j^{(4)}\right|$$

$$\lesssim N^{2s-1}R^{2-4s} + \frac{1}{N}\sum_{j=1}^{N}\left\|u_j-u_j^R\right\|_2^2.$$

$$p_m^j := p_m^{u_j} := \left|u_j(x_m)\right\rangle\left\langle u_j(x_m)\right| := \left|u_j\right\rangle\left\langle u_j\right|_m$$

$$p_m := \sum_{j=1}^{N} p_m^j \text{ as well as } q_m := \mathbb{1}_{L^2(\mathbb{R}^2)} - p_m$$

$$p_m^\phi p_n^\phi = 0$$

$$P_N^{(k)} := \sum_{\vec{a}\in\mathcal{A}_k} \prod_{m=1}^{N} (p_m)^{1-a_m}(q_m)^{a_m}; \mathcal{A}_k := \left\{\vec{a} = (a_1, \dots, a_N) \in \{0,1\}^N : \sum_{m=1}^{N} a_m = k\right\}$$

$$\mathrm{i}\partial_t p_m = [\mathcal{H}_R(x_m), p_m] \text{ and } \mathrm{i}\partial_t q_m = [\mathcal{H}_R(x_m), q_m].$$

$$\mathrm{i}\partial_t P_N^{(k)}(t) = \left[\sum_{m=1}^{N} \mathcal{H}_R(x_m), P_N^{(k)}(t)\right]$$

$$\left\langle \psi_{\mathrm{as}}^a, p_m^\phi \psi_{\mathrm{as}}^a \right\rangle_{N-a}(x_a) \leq (N-a)^{-1} \langle \psi_{\mathrm{as}}^a, \psi_{\mathrm{as}}^a \rangle_{N-a}(x_a)$$

$$\left\langle \psi_{\mathrm{as}}^a, p_m^\phi \psi_{\mathrm{as}}^a \right\rangle \leq (N-a)^{-1} \text{ and } p_m \leq N(N-a)^{-1}\mathbb{1}_{L^2(\mathbb{R}^2)} \lesssim \mathbb{1}_{L^2(\mathbb{R}^2)}$$

$$\left\langle \psi_{\mathrm{as}}^a, p_m^\phi \psi_{\mathrm{as}}^a \right\rangle_{N-a} = (N-a)^{-1} \left\langle \psi_{\mathrm{as}}^a, \sum_{n\notin A} p_n^\phi \psi_{\mathrm{as}}^a \right\rangle_{N-a}$$

$$\left\langle \psi_{\mathrm{as}}^a, p_m^\phi \psi_{\mathrm{as}}^a \right\rangle_{N-a}^2 \leq (N-a)^{-2} \langle \psi_{\mathrm{as}}^a, \psi_{\mathrm{as}}^a \rangle_{N-a} \left\langle \psi_{\mathrm{as}}^a, \sum_{n\notin A} p_n^\phi \sum_{j\notin A} p_j^\phi \psi_{\mathrm{as}}^a \right\rangle_{N-a}$$
$$= (N-a)^{-1} \langle \psi_{\mathrm{as}}^a, \psi_{\mathrm{as}}^a \rangle_{N-a} \left\langle \psi_{\mathrm{as}}^a, p_m^\phi \psi_{\mathrm{as}}^a \right\rangle_{N-a}$$

$$\left| \left\langle p_1, \sum_{j=1}^{N} \left(\mathbb{1} - \sum_{m=2}^{N} p_m^{v_j} \right) p_1 \right\rangle_{\Psi_N^1} \right| \leq (N-1)\langle \Psi_N^1, q_2 \Psi_N^1 \rangle + \langle \Psi_N^1, \Psi_N^1 \rangle$$

$$\left| \left\langle p_1, \sum_{i,j=1}^{N} \left(\mathbb{1} - \sum_{m=2}^{N} p_m^{v_j} \sum_{n=2}^{N} p_n^{v_i} \right) p_1 \right\rangle_{\Psi_N^1} \right| \lesssim N^2 \langle \Psi_N^1, q_2 \Psi_N^1 \rangle + N \langle \Psi_N^1, \Psi_N^1 \rangle$$

$$\left| \left\langle p_1, \sum_{j=1}^{N} \left(\mathbb{1} - \sum_{m=2}^{N} p_m^{v_j} \right) p_1 \right\rangle_{\Psi_N^1} \right| = \left| \left\langle p_1, \left(N - \sum_{j=1}^{N} \sum_{m=2}^{N} p_m^{v_j} \right) p_1 \right\rangle_{\Psi_N^1} \right|$$
$$= \left| \left\langle p_1, \left(N - \sum_{m=2}^{N} p_m \right) p_1 \right\rangle_{\Psi_N^1} \right| \leq \left| \left\langle p_1, \sum_{m=2}^{N} (\mathbb{1} - p_m) p_1 \right\rangle_{\Psi_N^1} \right| + \langle \Psi_N^1, \Psi_N^1 \rangle$$
$$\leq \left| \langle p_1, (N-1) q_2 p_1 \rangle_{\Psi_N^1} \right| + \langle \Psi_N^1, \Psi_N^1 \rangle$$

$$\left|\left\langle p_1, \sum_{i,j=1}^{N}\left(\mathbb{1}-\sum_{m=2}^{N} p_m^{v_j}\sum_{n=3}^{N} p_n^{v_i}\right)p_1\right\rangle_{\Psi_N^1}\right| = \left|\left\langle p_1, \left(N^2-\sum_{j=1}^{N}\sum_{m=2}^{N} p_m^{v_j}\sum_{i=1}^{N}\sum_{n=3}^{N} p_n^{v_i}\right)p_1\right\rangle_{\Psi_N^1}\right|$$

$$= \left|\left\langle p_1, \left(N^2-\sum_{m=2}^{N} p_m\sum_{n=3}^{N} p_n\right)p_1\right\rangle_{\Psi_N}\right| \lesssim N^2\left|\langle p_1, (\mathbb{1}-p_2p_3)p_1\rangle_{\Psi_N^1}\right| + N\langle \Psi_N^1, \Psi_N^1\rangle$$

$$\lesssim N^2\left|\langle p_1, q_2p_1\rangle_{\Psi_N^1}\right| + N\langle \Psi_N^1, \Psi_N^1\rangle$$

$$\hat{f} := \sum_{k\in\mathbb{Z}}^{N} f(k)P_N^{(k)}$$

$$\alpha_f(\Psi_N(t)) := \left\langle \Psi_N(t), \hat{f}\Psi_N(t)\right\rangle_{L^2(\mathbb{R}^{2N})}$$

$$\alpha_m(t) := \langle \Psi_N(t), \hat{m}(1/2)\Psi_N(t)\rangle$$

$$f^{(d)}(k) := (\mathbb{1}-\tau(-d))\mathbb{1}_{\{d,\dots,N\}}(k)f(k)$$
$$f^{(-d)}(k) := (\tau(d)-\mathbb{1})\mathbb{1}_{\{0,\dots,N-d\}}(k)f(k)$$

$$P_{i_1\dots i_n}^{(a)} := \left(\prod_{m=1}^{a} q_{i_m}\prod_{m=a+1}^{n} p_{i_m}\right)_{\text{sym}}$$

$$\left(P_{1\dots n}^{(a)}h_{1\dots n}P_{1\dots n}^{(b)}\right)\hat{f} = \widehat{\tau_{b-a}f}\left(P_{1\dots n}^{(a)}h_{1\dots n}P_{1\dots n}^{(b)}\right)$$
$$\hat{f}\left(P_{1\dots n}^{(a)}h_{1\dots n}P_{1\dots n}^{(b)}\right) = \left(P_{1\dots n}^{(a)}h_{1\dots n}P_{1\dots n}^{(b)}\right)\widehat{\tau_{a-b}f}$$

$$\left(\hat{f}-\widehat{\tau_{b-a}f}\right)P_{1\dots n}^{(a)} = \sum_{k\in\mathbb{Z}}\left(f(k)-f(k-(a-b))\right)\mathbb{1}_{\{a-b,\dots,N\}}(k)P_N^{(k)} = \widehat{f^{(a-b)}} \geq 0$$

$$\left(\tau_{a-b}\sqrt{\widehat{f^{(a-b)}}}\right) = \sum_{k\in\mathbb{Z}}\left(f(k+a-b)-f(k)\right)^{1/2}\mathbb{1}_{\{a-b,\dots,N\}}(k+a-b)P_N^{(k)}$$
$$= \left(\sum_{k\in\mathbb{Z}}\left(f(k+a-b)-f(k)\right)\mathbb{1}_{\{0,\dots,N-(a-b)\}}(k)P_N^{(k)}\right)^{1/2} = \widehat{f^{(b-a)}}^{1/2}$$

$$\langle \Psi_N, [W_{12}, \hat{f}]\Psi_N\rangle = \sum_{a,b=0}^{2}\left\langle \Psi_N, P_{12}^{(a)}\left(W_{12}\hat{f}-\hat{f}W_{12}\right)P_{12}^{(b)}\Psi_N\right\rangle$$
$$= -\sum_{a,b=0}^{2}\left\langle \Psi_N, \left(\hat{f}-\widehat{\tau_{b-a}f}\right)P_{12}^{(a)}W_{12}P_{12}^{(b)}\Psi_N\right\rangle$$
$$= 2\mathrm{i}\mathrm{Im}\sum_{a>b}\left\langle \Psi_N, \widehat{f^{(a-b)}}P_{12}^{(a)}W_{12}P_{12}^{(b)}\Psi_N\right\rangle$$
$$= 2\mathrm{i}\mathrm{Im}\sum_{a>b}\left\langle \Psi_N, \widehat{f(a-b)}^{1/2}P_{12}^{(a)}W_{12}P_{12}^{(b)}\left(\widehat{\tau_{a-b}f^{(a-b)}}\right)\Psi_N\right\rangle$$
$$= 2\mathrm{i}\mathrm{Im}\sum_{a>b}\left\langle \Psi_N, \widehat{f(a-b)}^{1/2}P_{12}^{(a)}W_{12}P_{12}^{(b)}\widehat{f(b-a)}^{1/2}\Psi_N\right\rangle$$

$$\langle \Psi_N, [W_{123}, \hat{f}]\Psi_N\rangle = \left\langle \Psi_N, \sum_{a=0}^{3} P_{123}^{(a)}(W_{123}\hat{f} - \hat{f}W_{123}) \sum_{b=0}^{3} P_{123}^{(b)}\Psi_N \right\rangle$$

$$= -\sum_{a,b=0}^{3} \left\langle \Psi_N, (\hat{f} - \widehat{\tau_{b-a} f})P_{123}^{(a)} W_{123} P_{123}^{(b)}\Psi_N \right\rangle$$

$$= 2\mathrm{iIm} \sum_{a>b} \left\langle \Psi_N, \widehat{f^{(a-b)}} P_{123}^{(a)} W_{123} P_{123}^{(b)}\Psi_N \right\rangle$$

$$= 2\mathrm{iIm} \sum_{a>b} \left\langle \Psi_N, f\widehat{(a-b)}^{1/2} P_{123}^{(a)} W_{123} P_{123}^{(b)} f\widehat{(b-a)}^{1/2}\Psi_N \right\rangle$$

$$\langle \Psi_N, \widehat{m^{(\pm d)}}\Psi_N\rangle \lesssim \frac{d}{\sqrt{N}},$$

$$\langle q_1 \dots q_n \Psi_N, \widehat{m^{(\pm d)}} q_1 \dots q_n \Psi_N\rangle \lesssim \frac{d}{N}\alpha_m(t).$$

$$\left\langle \nabla_1 q_1 \widehat{m^{(\pm d)}}^{1/2} q_2 \Psi_N, \nabla_1 q_1 \widehat{m^{(\pm d)}}^{1/2} q_2 \Psi_N \right\rangle \leq \frac{d}{N} \|\nabla_1 q_1 \Psi_N\|^2$$

$$(m(k) - m(k-d))\mathbb{1}_{\{d,\dots,N\}}(k) = \frac{1}{\sqrt{N}}(\sqrt{k} - \sqrt{k-d})\mathbb{1}_{\{d,\dots,N\}}(k)$$

$$= \frac{1}{\sqrt{N}} \frac{d}{\sqrt{k} + \sqrt{k-d}} \mathbb{1}_{\{d,\dots,N\}}(k) \leq \frac{d}{\sqrt{N}}$$

$$\langle \phi, q_1 \phi\rangle = N^{-1} \sum_{j=1}^{N} \langle \phi, q_j \phi\rangle = N^{-1} \sum_{j=1}^{N} \left\langle \phi, q_j \sum_{k=0}^{N} P_N^{(k)} \phi \right\rangle = \sum_{k=1}^{N} \frac{k}{N} \left\langle \phi, P_N^{(k)} \phi \right\rangle$$

$$\langle \phi, q_1 q_2 \phi\rangle = N^{-1}(N-1)^{-1} \sum_{\substack{i,j=1 \\ i \neq j}}^{N} \langle \phi, q_j q_i \phi\rangle = \sum_{k=1}^{N} \frac{k(k-1)}{N(N-1)} \left\langle \phi, P_N^{(k)} \phi \right\rangle$$

$$\langle q_1 \dots q_n \Psi_N, \widehat{m^{(d)}} q_1 \dots q_n \Psi_N\rangle =$$

$$\sum_{k\in\mathbb{Z}} \frac{k(k-1)\dots(k-n+1)}{N(N-1)\dots(N-n+1)} (m(k) - m(k-d))\mathbb{1}_{\{d,\dots,N\}}(k) \left\langle \Psi_N, P_N^{(k)}\Psi_N \right\rangle$$

$$\leq \frac{d}{N} \sum_{k\in\mathbb{Z}} \frac{k}{\sqrt{N}(\sqrt{k} + \sqrt{k-d})} \mathbb{1}_{\{d,\dots,N\}}(k) \left\langle \Psi_N, P_N^{(k)}\Psi_N \right\rangle$$

$$\leq \frac{d}{N} \left\langle \Psi_N, \sum_{k\in\mathbb{Z}} (k/N)^{1/2} P_N^{(k)} \Psi_N \right\rangle = \frac{d}{N} \langle \Psi_N, \widehat{m}\Psi_N\rangle$$

$$\nabla_1 q_1 q_2 \widehat{m^{(d)}}^{1/2} = \nabla_1 q_1 q_2 \sum_{k\in\mathbb{Z}} \left(m^{(d)}(k)\right)^{1/2} P_N^{(k)}$$

$$= \sum_{k\in\mathbb{Z}} \left(m^{(d)}(k)\right)^{1/2} P_{2\dots N}^{(k-1)} q_2 \nabla_1 q_1 (p_1 + q_1)$$

$$= \sum_{k\in\mathbb{Z}} \left(m^{(d)}(k)\right)^{1/2} (p_1 + q_1) P_{2\dots N}^{(k-1)} q_2 \nabla_1 q_1$$

$$= \widehat{m^{(d)}}^{1/2} \nabla_1 q_1 q_2$$

$$\begin{aligned}\langle \nabla_1 q_1 q_2 \Psi_N, \widehat{m^{(d)}} \nabla_1 q_1 q_2 \Psi_N \rangle &= \sum_{k\in\mathbb{Z}} \frac{k}{N}(m(k)-m(k-d))\mathbb{1}_{\{d,\dots,N\}}(k) \left\langle \nabla_1 q_1 \Psi_N, P_N^{(k)} \nabla_1 q_1 \Psi_N \right\rangle \\ &\le \frac{d}{N} \sum_{k\in\mathbb{Z}} \frac{k}{\sqrt{N}(\sqrt{k}+\sqrt{k-d})} \mathbb{1}_{\{d,\dots,N\}}(k) \left\langle \nabla_1 q_1 \Psi_N, P_N^{(k)} \nabla_1 q_1 \Psi_N \right\rangle \\ &\le \frac{d}{N} \left\langle \nabla_1 q_1 \Psi_N, \sum_{k\in\mathbb{Z}} \frac{\sqrt{k}}{\sqrt{N}} P_N^{(k)} \nabla_1 q_1 \Psi_N \right\rangle = \frac{d}{N} \|\nabla_1 q_1 \Psi_N\|^2\end{aligned}$$

$$\begin{gathered} v'(x) := 2\beta(-\mathrm{i}\nabla_x)\cdot \mathbf{a}_N[\rho](x) - \beta(\mathbf{a}_N * J)(x), \\ w'(x) := \beta \mathbf{a}_N[\rho]^2(x) - 2\beta \mathbf{a}_N * \beta \mathbf{a}_N[\rho]\rho)(x), \\ v(x-y) := 2\beta(-\mathrm{i}\nabla_x)\cdot \mathbf{a}_N(x-y), \\ w(x-y, x-z) := \beta^2 \mathbf{a}_N(x-y)\cdot \mathbf{a}_N(x-z) \end{gathered}$$

$$\rho := \sum_{j=1}^N |u_j|^2 \text{ and } J := \sum_{j=1}^N \mathrm{i}(u_j \nabla \bar{u}_j - \bar{u}_j \nabla u_j)$$

$$\left\{\lambda_i^{(\mathbf{a}\cdot\nabla)}(x_2), \chi_i(x_2), U^\chi(x_2)\right\}_{i=1}^N, \left\{\lambda_i^{(\mathbf{a}^2)}(x_2), \eta_i(x_2), U^\eta(x_2)\right\}_{i=1}^N \left\{\lambda_i^{(\mathbf{a})}(x_1), \sigma_i(x_1), U^\sigma(x_1)\right\}_{i=1}^N$$

$$p_1(-\mathrm{i}\nabla_1)\cdot \mathbf{a}_N(x_1-x_2)p_1 = \sum_{i=1}^N \lambda_i^{(\mathbf{a}\cdot\nabla)}(x_2) p_1^{\chi_i(x_2)}$$

$$p_2(-\mathrm{i}\nabla_1)\cdot \mathbf{a}_N(x_1-x_2)p_2 = (-\mathrm{i}\nabla_1)\cdot \sum_{i=1}^N \lambda_i^{(\mathbf{a})}(x_1) p_2^{\sigma_i(x_1)}$$

$$p_2|\mathbf{a}_N(x_1-x_2)|^2 p_2 = \sum_{i=1}^N \lambda_i^{(\mathbf{a}^2)}(x_1) p_2^{\eta_i(x_1)}$$

$$2\sum_{i=1}^N \lambda_i^{(\mathbf{a}\cdot\nabla)}(x_2) = -(\mathbf{a}_N * J)(x_2), \sum_{i=1}^N \lambda_i^{(\mathbf{a})}(x_1) = \mathbf{a}_N[\rho](x_1), \sum_{i=1}^N \lambda_i^{(\mathbf{a}^2)}(x_1) = \mathbf{a}_N^2[\rho](x_1).$$

$$\begin{aligned} p_1(-\mathrm{i}\nabla_1)\cdot \mathbf{a}_N(x_1-x_2)p_1 &= \sum_{i,j=1}^N \langle u_i, (-\mathrm{i}\nabla_1)\cdot \mathbf{a}_N(x_1-x_2)u_j\rangle_1 |u_i\rangle\langle u_j|_1 \\ &= \sum_i^N \lambda_i^{(\mathbf{a}\cdot\nabla)}(x_2) |\chi_i^{x_2}\rangle\langle \chi_i^{x_2}|_1 \\ &= \sum_i^N \lambda_i^{(\mathbf{a}\cdot\nabla)}(x_2) p_i^{x_i^{x_2}} \end{aligned}$$

$$\begin{aligned} p_2(-\mathrm{i}\nabla_1)\cdot \mathbf{a}_N(x_1-x_2)p_2 &= \sum_{i,j=1}^N \langle u_i, (-\mathrm{i}\nabla_1)\cdot \mathbf{a}_N(x_1-x_2)u_j\rangle_2 |u_i\rangle\langle u_j|_2 \\ &= (-\mathrm{i}\nabla_1)\cdot \sum_{i,j=1}^N \langle u_i, \mathbf{a}_N(x_1-x_2)u_j\rangle_2 |u_i\rangle\langle u_j|_2 \\ &= (-\mathrm{i}\nabla_1)\cdot \sum_{i=1}^N \lambda_i^{(\mathbf{a})}(x_1) |\sigma_i^{x_1}\rangle\langle \sigma_i^{x_1}|_2 \end{aligned}$$

$$\sum_{i=1}^{N} |u_i\rangle\left\langle u_i|_1 = \sum_{i=1}^{N} |\chi_i\right\rangle\left\langle \chi_i|_1 = \sum_{i=1}^{N} |\sigma_i\right\rangle\langle \sigma_i|_1$$

$$2\sum_{i=1}^{N} \lambda_i^{(\mathbf{a}\cdot\nabla)}(x_2) = 2\sum_{i=1}^{N} \langle \chi_i, (-\mathrm{i}\nabla_1)\cdot \mathbf{a}_N(x_1-x_2)\chi_i\rangle_1 = 2\sum_{i=1}^{N} \langle u_i, (-\mathrm{i}\nabla_1)\cdot \mathbf{a}_N(x_1-x_2)u_i\rangle_1$$
$$= \sum_{i=1}^{N} \int_{\mathbb{R}^2} \left(\bar{u}_j(x_1)(-\mathrm{i}\nabla_1)u_j(x_1)\cdot \mathbf{a}_N(x_1-x_2) + \text{ h.c. }\right)\mathrm{d}x_1 = -(\mathbf{a}_N * J)(x_2)$$

$$\sum_{i=1}^{N} \lambda_i^{(\mathbf{a})}(x_1) = 2\sum_{i=1}^{N} \langle \sigma_i, \mathbf{a}_N(x_1-x_2)\sigma_i\rangle_2 = \sum_{i=1}^{N} \langle u_i, \mathbf{a}_N(x_1-x_2)u_i\rangle_2 = (\mathbf{a}_N * \rho)(x_1).$$

$$p_1(-\Delta_1)p_1 \lesssim 1$$

$$q_2 p_1 v_{12}^2 p_1 q_2 \lesssim N^{-1} q_2 \| |\mathbf{a}_N|^2 * \rho_\nabla \|_\infty$$
$$\lesssim N^{-1} q_2 \left(\left\| \nabla_1 |\mathbf{a}_R|^2 \sqrt{\rho}\sqrt{\rho_\nabla} \right\|_\infty + \left\| |\mathbf{a}_R|^2 \sqrt{\rho}\sqrt{\rho_\Delta} \right\|_\infty \right)$$

$$q_2 p_1 v_{21}^2 p_1 q_2 \lesssim N^{-1} \| |\mathbf{a}_N|^2 * \rho \|_\infty q_2(-\Delta_2)q_2$$
$$p_1 p_2 v_{12}^2 p_1 p_2 \lesssim N^{-1} \| |\mathbf{a}_N|^2 * \rho \|_\infty$$
$$p_1 q_2 (v_1')^2 p_1 q_2 \lesssim \|\mathbf{a}_N[\rho]\|_\infty^2 q_2 + \|\mathbf{a}_N |* J\|_\infty^2 q_2$$
$$p_2 |\mathbf{a}_N|_{12}^2 p_2 \lesssim N^{-1} \| |\mathbf{a}_N|^2 * \rho \|_\infty$$
$$p_2 |\mathbf{a}_N|_{12}^4 p_2 \lesssim N^{-1} \| |\mathbf{a}_N|^4 * \rho \|_\infty$$

$$p_1(-\Delta_1)p_1 = \sum_{j=1}^{N} \lambda_j^{(\Delta)} p_1^{\chi_j^\Delta} \leq N^{-1} \sum_{j=1}^{N} \left\|\nabla u_j\right\|_2^2 \lesssim 1$$

$$\left\langle q_2, p_1 v_{12}^2 p_1 q_2 \right\rangle_\phi = \left\langle q_2, \sum_{i=1}^{N} \lambda_i^{(v^2)}(x_2) p_1^{\chi_i^{(v^2)}(x_2)} q_2 \right\rangle_\phi$$
$$\leq \sup_{x_2} \sum_{i=1}^{N} \lambda_i^{(v^2)}(x_2) \left\langle q_2, p_1^{\chi_i^{(v^2)}}(x_2) \right.$$
$$\leq \sup_{x_2} \sum_{i=1}^{N} \left\langle u_i, v_{12}^2 u_i \right\rangle_1 (N-1)^{-1} \|q_2\phi\|^2$$

$$\sum_{j=1}^{N} \left\langle u_j, (v_{12})^2 u_j \right\rangle_1 = 4\sum_{j=1}^{N} \left\langle -\mathrm{i}\nabla_1 u_j, \left|a_R\right|^2 (x_1-x_2)(-\mathrm{i}\nabla_1)u_j \right\rangle_1$$
$$= 4\sum_{j=1}^{N} \left\langle u_j, (-\mathrm{i}\nabla_1 |a_R|_{12}^2)\cdot(-\mathrm{i}\nabla_1)u_j) \right\rangle_1 + 4\sum_{j=1}^{N} \left\langle u_j, \left|a_R\right|_{12}^2 (-\Delta_1 u_j) \right\rangle_1$$
$$\lesssim \left\|\nabla_1 |\mathbf{a}_R|^2 \sqrt{\rho}\sqrt{\rho_\nabla}\right\|_\infty + \left\| |\mathbf{a}_R|^2 \sqrt{\rho}\sqrt{\rho_\Delta}\right\|_\infty$$

$$\begin{aligned}\left\langle p_1q_2, v_{21}^2 p_1 q_2\right\rangle_\phi &= 4\langle p_1q_2, (-\mathrm{i}\nabla_2)|\mathbf{a}_N|_{21}^2(-\mathrm{i}\nabla_2)p_1q_2\rangle_\phi \\ &\le C\langle(-\mathrm{i}\nabla_2)q_2, p_1|\mathbf{a}_N|_{21}^2 p_1(-\mathrm{i}\nabla_2)q_2\rangle_\phi \\ &\le C\sum_{i=1}^N \left\langle(-\mathrm{i}\nabla_2)q_2, \lambda_i^{(\mathbf{a}^2)}(x_2)p_1^{\eta_i(x_2)}(-\mathrm{i}\nabla_2)q_2\right\rangle_\phi\end{aligned}$$

$$(N-1)^{-1}\sup_{x_2}\sum_{i=1}^N \lambda_i^{(\mathbf{a}^2)}(x_2)\|\nabla_2 q_2\phi\|^2 \lesssim (N-1)^{-1}\||\mathbf{a}_N|^2 * \rho\|_\infty\|\nabla_2 q_2\phi\|^2$$

$$p_1p_2v_{12}^2p_1p_2 = p_2\sum_{i=1}^N \lambda_i^{v^2}(x_2)p_1^{\chi_i(x_2)}p_2 = p_2\sum_{i=1}^N \lambda_i^{v^2}(x_2)p_1^{\chi_i(x_2)}p_2 \lesssim N^{-1}p_2\sum_{i=1}^N \lambda_i^{v^2}(x_2)p_2$$

$$\begin{aligned}p_1p_2v_{12}^2p_1p_2 &\le (N-1)^{-1}\sum_{i=1}^N \mu_i^{v^2}p_2^{\tilde\varphi_i} \\ &\le N^{-1}(N-1)^{-1}\sum_{i=1}^N \mu_i^{v^2} \\ &\lesssim N^{-2}\sum_{i,j=1}^N \left\langle u_j(x)u_i(y), v^2(x-y)u_j(x)u_i(y)\right\rangle \\ &\lesssim N^{-2}\||\mathbf{a}_N|^2 * \rho\|_\infty\sum_{i=1}^N \|\nabla u_i\|_2^2\end{aligned}$$

$$q_2p_1(v_1')^2p_1q_2 = q_2\sum_{j=1}^N \lambda_j^{(v'^2)}p_1^{\omega_j^{(v'^2)}} \le (N-1)^{-1}q_2\sum_{j=1}^N \lambda_j^{(v'^2)} \lesssim N^{-1}\sum_{j=1}^N \left\langle u_j, (v_1')^2u_j\right\rangle_1 q_2$$

$$\begin{aligned}\sum_{j=1}^N \left\langle u_j, (v_1')^2u_j\right\rangle_1 &\lesssim \sum_{j=1}^N \left(2\left\|\mathbf{a}_N[\rho]\cdot\nabla u_j\right\|_2^2 + \left\|(\mathbf{a}_N * J)u_j\right\|_2^2\right) \\ &\lesssim \|\mathbf{a}_N[\rho]\|_\infty^2\sum_{j=1}^N \left\|\nabla u_j\right\|_2^2 + \||\mathbf{a}_N * J|^2\rho\|_1\end{aligned}$$

$$p_2|\mathbf{a}_N|_{12}^2p_2 = \sum_{j=1}^N \lambda_j^{(\mathbf{a}^2)}(x_1)p_2^{\eta_j(x_1)} \le N^{-1}\||\mathbf{a}_N|^2 * \rho\|_\infty$$

$$p_2p_3w(x_1,x_2,x_3)p_3p_2 = \sum_{i=1}^N\sum_{j=1}^N \left\langle\tilde\omega_i(x_1), \lambda_j^w(x_1,x_2)p_3^{\omega_j(x_1,x_2)}\tilde\omega_i(x_1)\right\rangle_2 p_2^{\tilde\omega_i(x_1)}$$

$$\sum_{i,j=1}^N \left\langle\tilde\omega_i(x_1), \lambda_j^w(x_1,x_2)\tilde\omega_i(x_1)\right\rangle_2 = \int_{\mathbb{R}^4} w(x_1,x_2,x_3)\rho(x_2)\rho(x_3)\mathrm{d}x_2\,\mathrm{d}x_3$$

$$p_2p_3w_{123}p_3p_2=\sum_{i,j,k,\ell=1}^{N}\left\langle u_i(x_2)u_j(x_3),w_{123}u_k(x_2)u_\ell(x_3)\right\rangle_{2,3}\left|u_i(x_2)u_j(x_3)\right\rangle\langle u_k(x_2)u_\ell(x_3)|$$

$$=\sum_{i,k=1}^{N}\left\langle u_j,\sum_{j,\ell=1}^{N}\langle u_i,w_{123}u_\ell\rangle_3 u_k\right\rangle_2 |u_i\rangle\langle u_k|_2\otimes|\,u_j\rangle\langle u_\ell|_3$$

$$\sum_{j,\ell=1}^{N}\left\langle u_j,w_{123}u_\ell\right\rangle_3\left|u_j\right\rangle\left\langle u_\ell\right|_3=\sum_{j=1}^{N}\lambda_j^w(x_1,x_2)p_3^{\omega_j(x_1,x_2)}$$

$$p_2p_3w_{123}p_3p_2=\sum_{i,j,k=1}^{N}\left\langle u_i,\lambda_j^w(x_1,x_2)p_3^{\omega_j(x_1,x_2)}u_k\right\rangle_2|u_i\rangle\langle u_k|_2.$$

$$\left\langle u_i,\lambda_j^w(x_1,x_2)p_3^{\omega_j(x_1,x_2)}u_k\right\rangle_2=\left\langle u_i,\lambda_j^w(x_1,x_2)\mid w_j(x_1,x_2)\right\rangle\left\langle w_j(x_1,x_2)\right|_3u_k\rangle_2$$

$$=\sum_{p,q=1}^{N}\left\langle u_i,\lambda_j^w(x_1,x_2)U_{jp}^w(x_1,x_2)\bar{U}_{jq}^w(x_1,x_2)u_k\right\rangle_2\left|u_p\right\rangle\left\langle u_q\right|_3$$

$$p_2p_3w_{123}p_3p_2=\sum_{p,q,i,j,k=1}^{N}\left\langle u_i,\lambda_j^w(x_1,x_2)U_{jp}^w(x_1,x_2)\bar{U}_{jq}^w(x_1,x_2)u_k\right\rangle_2|u_i\rangle\langle u_k|_2\otimes|\,u_p\rangle\left\langle u_q\right|_3$$

$$=\sum_{p,q,i,j}^{N}\mu_{ijpq}^w(x_1)p_2^{\tilde{\omega}_i(x_1)}\otimes\left|u_p\right\rangle\left\langle u_q\right|_3$$

$$\mu_{ijpq}^w(x_1)=\left\langle\tilde{\omega}_i(x_1),\lambda_j^w(x_1,x_2)U_{jp}^w(x_1,x_2)\bar{U}_{jq}^w(x_1,x_2)\tilde{\omega}_i(x_1)\right\rangle_2$$

$$p_2p_3w_{123}p_3p_2=\sum_{p,q,i,j=1}^{N}\left\langle\tilde{\omega}_i(x_1),\lambda_j^w(x_1,x_2)U_{jp}^w(x_1,x_2)\bar{U}_{jq}^w(x_1,x_2)\tilde{\omega}_i(x_1)\right\rangle_2p_2^{\tilde{\omega}_i(x_1)}\otimes\left|u_p\right\rangle\left\langle u_q\right|_3$$

$$=\sum_{p,q,i,j=1}^{N}\left\langle\tilde{\omega}_i(x_1),\lambda_j^w(x_1,x_2)p_3^{\omega_j(x_1,x_2)}\tilde{\omega}_i(x_1)\right\rangle_2p_2^{\tilde{\omega}_i(x_1)}$$

$$\sum_{i,j=1}^{N}\left\langle\tilde{\omega}_i^{(x_1)},\lambda_j^w(x_1,x_2)\tilde{\omega}_i^{(x_1)}\right\rangle_2=\sum_{i,j=1}^{N}\left\langle\tilde{\omega}_i^{(x_1)},\left\langle u_j,w_{123}u_j\right\rangle_3\tilde{\omega}_i^{(x_1)}\right\rangle_2$$

$$=\sum_{i=1}^{N}\left\langle\tilde{\omega}_i^{(x_1)},(w_{123}*\rho)(x_1,x_2)\tilde{\omega}_i^{(x_1)}\right\rangle_2$$

$$=\sum_{k,p,i=1}^{N}\left\langle u_k,\bar{U}_{ik}^{\tilde{w}}(x_1)U_{ip}^{\tilde{w}}(x_1)(w_{123}*\rho)(x_1,x_2)u_p\right\rangle_2$$

$$=\sum_{k,p=1}^{N}\left\langle u_k,\delta_{kp}(w_{123}*\rho)(x_1,x_2)u_p\right\rangle_2$$

$$=\int_{\mathbb{R}^4}w(x_1,x_2,x_3)\rho(x_2)\rho(x_3)\mathrm{d}x_2\,\mathrm{d}x_3$$

$$p_2p_3\mathbf{a}_N(x_1-x_2)\cdot\mathbf{a}_N(x_1-x_3)p_3p_2=\sum_{i=1}^{N}\sum_{j=1}^{N}\lambda_j^{(\mathbf{a})}(x_1)\cdot\lambda_i^{(\mathbf{a})}(x_1)p_3^{\sigma_j(x_1)}p_2^{\sigma_i(x_1)}$$

$$p_2p_3\mathbf{a}_N(x_2-x_1)\cdot\mathbf{a}_N(x_2-x_3)p_3p_2=\sum_{i=1}^{N}\sum_{j=1}^{N}\left\langle\omega_i^{(x_1)},\lambda_j^{(\mathbf{a}\cdot\mathbf{a})}(x_1,x_2)p_3^{\sigma_j^{x_2}}\omega_i^{(x_1)}\right\rangle_2 p_2^{\omega_i^{x_1}}$$

$$\sum_{i=1}^{N}\sum_{j=1}^{N}\lambda_j^{(\mathbf{a})}(x_1)\cdot\lambda_i^{(\mathbf{a})}(x_1)=|\mathbf{a}_N*\rho|^2(x_1),$$

$$\sum_{i=1}^{N}\sum_{j=1}^{N}\left\langle\omega_i^{(x_1)},\lambda_j^{(\mathbf{a}\cdot\mathbf{a})}(x_1,x_2)\omega_i^{(x_1)}\right\rangle_2=-\mathbf{a}_N*(\mathbf{a}_N*\rho)(x_1).$$

$$\begin{aligned}p_2p_3w_{123}p_3p_2&=\sum_{i,j,k,\ell=1}^{N}\left\langle u_i(x_2)u_j(x_3),\mathbf{w}_{12}\cdot\mathbf{w}_{13}u_k(x_2)u_\ell(x_3)\right\rangle\left|u_i(x_2)u_j(x_3)\right\rangle\left\langle u_k(x_2)u_\ell(x_3)\right|\\&=\sum_{i,k=1}^{N}\left\langle u_j,\mathbf{w}_{12}u_k\right\rangle_2|u_i\rangle\left\langle u_k|_2\otimes\sum_{j,\ell=1}^{N}\langle u_i,\mathbf{w}_{13}u_\ell\rangle_3\mid u_j\right\rangle\langle u_\ell|_3\\&=\sum_{i=1}^{N}\sum_{j=1}^{N}\lambda_j^{(\mathbf{a})}(x_1)\cdot\lambda_i^{(\mathbf{a})}(x_1)p_3^{\sigma_j(x_1)}p_2^{\sigma_i(x_1)}\end{aligned}$$

$$\sum_{i,k=1}^{N}\left\langle u_j,\mathbf{w}_{12}u_k\right\rangle_2|u_i\rangle\left\langle u_k|_2=\sum_{i}^{N}\lambda_i^{(\mathbf{a})}(x_1)\mid\sigma_i(x_1)\right\rangle\langle\sigma_i(x_1)|_2$$

$$\sum_{i}^{N}\lambda_i^{(\mathbf{a})}(x_1)=\sum_{i}^{N}\langle\sigma_i(x_1),\mathbf{w}_{12}\sigma_i(x_1)\rangle_2=\sum_{i}^{N}\langle u_i,\mathbf{w}_{12}u_i\rangle_2=\int_{\mathbb{R}^2}\mathbf{a}_N(x_1-x_2)\rho(x_2)\mathrm{d}x_2$$

$$\lambda_j^{(\mathbf{a}\cdot\mathbf{a})}(x_1,x_2)=\left\langle u_j,w_{123}u_j\right\rangle_3=\mathbf{a}_N(x_2-x_1)\cdot\lambda_j^{(\mathbf{a})}(x_2)$$

$$p_2p_3(w_{123}+w_{213}+w_{321})^2p_3p_2\lesssim N^{-2}\||\mathbf{a}_N|^2*\rho\|_\infty^2$$

$$\begin{aligned}p_2p_3w_{123}^2p_3p_2&\le p_2p_3|\mathbf{a}_N(x_1-x_2)|^2|\mathbf{a}_N(x_1-x_3)|^2p_3p_2\\&\le\sum_{i,j=1}^{N}\lambda_i^{(\mathbf{a}^2)}(x_1)\lambda_j^{(\mathbf{a}^2)}(x_1)p_2^{\tilde{\chi}_j}p_3^{\tilde{\chi}_i}\\&\lesssim N^{-2}\||\mathbf{a}_N|^2*\rho\|_\infty^2\end{aligned}$$

$$\begin{aligned}p_2p_3w_{213}^2p_3p_2&\le p_2p_3|\mathbf{a}_N(x_2-x_1)|^2|\mathbf{a}_N(x_2-x_3)|^2p_3p_2\\&\le\sum_{i=1}^{N}\sum_{j=1}^{N}\left\langle\tilde{\omega}_i^{(x_1)},\left|\mathbf{a}_N\right|^2(x_2-x_1)\lambda_j^{(\mathbf{a}^2)}(x_1,x_2)p_3^{\eta_j(x_2)}\tilde{\omega}_i^{(x_1)}\right\rangle_2 p_2^{\tilde{\omega}_i^{x_1}}\\&\lesssim N^{-2}\||\mathbf{a}_N|^2*(\mathbf{a}^2[\rho]\rho)\|_\infty\lesssim N^{-2}\||\mathbf{a}_N|^2*\rho\|_\infty^2\end{aligned}$$

$$\mathrm{i}\partial_t\Psi_N(t)=H_{N,R}\Psi_N(t)$$

$$\mathrm{i}\partial_t u_j(t,x) = \mathcal{H}_R(x) u_j(t,x)$$

$$\alpha_m(t) := \langle \Psi_N(t), \hat{m}(1/2)\Psi_N(t)\rangle$$

$$\begin{aligned}
\mathrm{i}\partial_t \alpha_m(t) =& \left\langle \Psi_N(t), \left[\sum_{m=1}^{N} \mathcal{H}_R(x_m) - H_{N,R}, \hat{m}(1/2)\right]\Psi_N(t)\right\rangle \\
=& \frac{N}{2}\left\langle \Psi_N(t), \left[\left(v'(x_1) + v'(x_2) - (N-1)(v_{12} + v_{21})\right), \hat{m}(1/2)\right]\Psi_N(t)\right\rangle \\
&+ \frac{N}{3}\left\langle \Psi_N(t), \left[\left(w_1' + w_2' + w_3' - (N-1)(N-2)(w_{123} + 2w_{213})\right), \hat{m}(1/2)\right]\Psi_N(t)\right\rangle \\
&+ \frac{N}{2}(N-1)\left\langle \Psi_N(t), [gN\mathbf{a}_N^2[\rho](x_1) + gN\mathbf{a}_N^2[\rho](x_2) - (gN + 2\beta^2)|\mathbf{a}_N(x_1 - x_2)|^2, \hat{m}(1/2)]\Psi_N(t)\right\rangle \\
=:& M_V + M_W + M_X
\end{aligned}$$

$$\begin{aligned}
|\partial_t \alpha_m(t)| \lesssim& \sqrt{N\||\mathbf{a}_N|^2 * \rho\|_\infty}\|\nabla_2 q_2 \Psi_N\|^2 + \left(\alpha_m(t) + \frac{1}{\sqrt{N}}\right) \\
&\times \Big(1 + \sqrt{N\||\mathbf{a}_N|^2 * \rho\|_\infty} + \sqrt{N\||\mathbf{a}_N|^2 * \rho_\nabla\|_\infty} + \||\mathbf{a}_N * \rho\|_\infty + \||\mathbf{a}_N| * J\|_\infty \\
&+ N^2\||\mathbf{a}_N|^2 * \rho\|_\infty^2 + \||\mathbf{a}_N| * \rho\|_\infty^2 + N^{3/2}\||\mathbf{a}_N|^4 * \rho\|_\infty^{1/2} + \sqrt{N\|\mathbf{a}_N[\rho]\|_\infty^2\||\mathbf{a}_N|^2 * \rho\|_\infty}\Big)
\end{aligned}$$

$$|\partial_t \alpha_m(t)| \lesssim \|\nabla_2 q_2 \Psi_N\|^2 + \left(\alpha_m(t) + \frac{1}{\sqrt{N}}\right),$$

$$\text{for any} \begin{cases} 0 \le s(1+2r) + 1/2r < 1/4 \\ 0 \le s < 1/2(1 - 1/m) \\ 0 \le s < 1/2 \end{cases}$$

$$q_{\neq 1}^{\phi_j(x)} := \mathbb{1} - \sum_{m=2}^{N} p_m^{\phi_j(x)}$$

$$\begin{aligned}
|M_X| \le& \frac{g}{2}N^2(N-1)\left|\left\langle \Psi_N(t), [\mathbf{a}_N^2[\rho](x_1) + \mathbf{a}_N^2[\rho](x_2) - |\mathbf{a}_N(x_1 - x_2)|^2, \hat{m}(1/2)]\Psi_N(t)\right\rangle\right| \\
&+ \beta^2 N(N-1)|\langle \Psi_N(t), [|\mathbf{a}_N(x_1 - x_2)|^2, \hat{m}(1/2)]\Psi_N(t)\rangle| \\
=:& M_X^{(1)} + M_X^{(2)}
\end{aligned}$$

$$\begin{aligned}
M_X^{(1)} \le& \frac{g}{2}N^2(N-1)\left|\left\langle \widehat{m^{(1)}}^{1/2}\Psi_N(t), q_1 p_2(\mathbf{a}_N^2[\rho](x_1) - |\mathbf{a}_N(x_1 - x_2)|^2) p_1 p_2 \widehat{m^{(-1)}}^{1/2}\Psi_N(t)\right\rangle\right| \\
&+ \frac{g}{2}N^2(N-1)\left|\left\langle \widehat{m^{(2)}}^{1/2}\Psi_N(t), q_1 q_2 \left|\mathbf{a}_N(x_1 - x_2)\right|^2 p_1 \widehat{p_2}^{1/2}\Psi_N(t)\right\rangle\right| \\
&+ \frac{g}{2}N^2(N-1)\left|\left\langle \widehat{m^{(1)}}^{1/2}\Psi_N(t), q_1 q_2(\mathbf{a}_N^2[\rho](x_1) - |\mathbf{a}_N(x_1 - x_2)|^2) p_1 q_2 \widehat{m^{(-1)}}^{1/2}\Psi_N(t)\right\rangle\right| \\
=:& M_X^{(1,1)} + M_X^{(1,2)} + M_X^{(1,3)}
\end{aligned}$$

$$\left|M_X^{(1,1)}\right| \leq CN^2\left|\left\langle q_1\phi, (\mathbf{a}_N^2[\rho](x_1) - (N-1)p_2|\mathbf{a}_N(x_1-x_2)|^2 p_2)p_1\tilde{\phi}\right\rangle\right|$$

$$\leq CN^2\left|\left\langle q_1\phi, \left(\sum_{j=1}^{N}\lambda_j^{\mathbf{a}^2}(x_1) - \sum_{m=2}^{N} p_m|\mathbf{a}_N(x_1-x_m)|^2 p_m\right)p_1\tilde{\phi}\right\rangle\right|$$

$$\leq CN^2\left|\left\langle q_1\phi, \sum_{j=1}^{N}\lambda_j^{\mathbf{a}^2}(x_1)\left(\mathbb{1} - \sum_{m=2}^{N} p_m^{\eta_j(x_1)}\right)p_1\tilde{\phi}\right\rangle\right|$$

$$\left|M_X^{(1,1)}\right|^2 \leq CN^4\left|\left\langle q_1\phi, \sum_{j=1}^{N}\left|\lambda_j^{\mathbf{a}^2}(x_1)\right|^2 q_1\phi\right\rangle\right|\left|\left\langle p_1\tilde{\phi}, \sum_{j=1}^{N} q_{\neq 1}^{\eta_j(x_1)} p_1\tilde{\phi}\right\rangle\right|$$

$$\leq CN^4\||\mathbf{a}_N|^4 * \rho\|_\infty\|q_1\phi\|^2\left((N-1)\left\|q_2\tilde{\phi}\right\|^2 + \|\tilde{\phi}\|^2\right)$$

$$\leq CN^3\||\mathbf{a}_N|^4 * \rho\|_\infty\alpha_m(t)\left(\alpha_m(t) + N^{-1/2}\right)$$

$$\left|M_X^{(1,2)}\right| \leq CN^3|\langle q_2q_1\phi, |\mathbf{a}_N(x_1-x_2)|^2 p_2p_1\tilde{\phi}\rangle|$$

$$\leq CN^2\left|\left\langle q_1\phi, \sum_{m=2}^{N} q_m\left|\mathbf{a}_N(x_1-x_2)\right|^2 p_m p_1\tilde{\phi}\right\rangle\right|$$

$$\leq CN^2\|q_1\phi\|N\left\langle\tilde{\phi}, q_3p_1p_2\left|\mathbf{a}_N(x_1-x_2)\right|^2|\mathbf{a}_N(x_1-x_3)|^2 p_1p_3q_2\tilde{\phi}\right\rangle^{1/2}$$

$$+CN^2\|q_1\phi\|\sqrt{N}\left\langle\tilde{\phi}, p_1p_2\left|\mathbf{a}_N(x_1-x_2)\right|^2 q_2|\mathbf{a}_N(x_1-x_2)|^2 p_1p_2\tilde{\phi}\right\rangle^{1/2}$$

$$\leq CN^3\|q_1\phi\|\left\||\mathbf{a}_N(x_1-x_2)|^2 q_3p_1p_2\tilde{\phi}\right\|$$

$$+CN^2\sqrt{N}\|q_1\phi\|\left\||\mathbf{a}_N(x_1-x_2)|^2 p_1p_2\tilde{\phi}\right\|$$

$$\leq CN^{3/2}\||\mathbf{a}_N|^4 * \rho\|_\infty^{1/2}\left(\alpha_m(t) + N^{-1/2}\right)$$

$$\left|M_X^{(1,3)}\right| \leq CN^3\left|\left\langle q_2q_1\phi, \mathbf{a}_N^2[\rho](x_1) + \left|\mathbf{a}_N(x_1-x_2)\right|^2 p_1q_2\tilde{\phi}\right\rangle\right|$$

$$\leq CN^3\left(\left\|\mathbf{a}_N^2[\rho]\right\|_\infty^2\|q_1\phi\|\left\|q_2\tilde{\phi}\right\| + \|q_1\phi\|\left\||\mathbf{a}_N(x_1-x_2)|^2 p_1q_2\tilde{\phi}\right\|\right)$$

$$\leq C\left(N^2\left\|\mathbf{a}_N^2[\rho]\right\|_\infty^2 + N^{3/2}\||\mathbf{a}_N|^4 * \rho\|_\infty^{1/2}\right)\alpha_m(t)$$

$$\left|M_X^{(2,1)}\right| \leq CN^2|\langle p_2q_1\phi, |\mathbf{a}_N(x_1-x_2)|^2 p_1p_2\tilde{\phi}\rangle|$$

$$\leq CN^2\|q_1\phi\|\left\||\mathbf{a}_N(x_1-x_2)|^2 p_1p_2\tilde{\phi}\right\|$$

$$\leq CN^2N^{-1/2}\sqrt{\alpha_m(t)}\left\||\mathbf{a}_N(x_1-x_2)|^2 p_1p_2\tilde{\phi}\right\|$$

$$\leq CN^{3/4}\||\mathbf{a}_N|^4 * \rho\|_\infty^{1/2}$$

$$|M_X| \lesssim \left(\alpha_m(t) + N^{-1/2}\right)\left(N^2\||\mathbf{a}_N|^2 * \rho\|_\infty^2 + N^{3/2}\||\mathbf{a}_N|^4 * \rho\|_\infty^{1/2}\right)$$

$$
\begin{aligned}
M_V =& 2\mathrm{i}N\mathrm{Im}\left\langle \Psi_N, \widehat{m^{(1)}}^{1/2} q_1 p_2 W_{12} p_1 p_2 \widehat{m^{(-1)}}^{1/2} \Psi_N \right\rangle \\
&+ \mathrm{i}N\mathrm{Im}\left\langle \Psi_N, \widehat{m^{(2)}}^{1/2} q_1 q_2 W_{12} p_1 \widehat{p_2}^{1/2} \Psi_N \right\rangle \\
&+ 2\mathrm{i}N\mathrm{Im}\left\langle \Psi_N, \widehat{m^{(1)}}^{1/2} q_1 q_2 W_{12} p_1 \widehat{m^{(-1)}}^{1/2} \Psi_N \right\rangle \\
=:& M_V^{(1)} + M_V^{(2)} + M_V^{(3)}
\end{aligned}
$$

$$
\begin{aligned}
M_V^{(1)} =& 2\mathrm{i}N\mathrm{Im}\langle q_1 p_2 \phi, W_{12}, p_1 p_2 \tilde{\phi} \rangle \\
=& 2\mathrm{i}N\mathrm{Im}\left\langle q_1\phi, v'(x_1) - \sum_{m=2}^{N} p_m (v_{1m} + v_{m1}) p_m, p_1 \tilde{\phi} \right\rangle \\
=& 2\mathrm{i}N\mathrm{Im}\left\langle q_1\phi, \sum_{j=1}^{N} \lambda_j^{(\mathbf{a})}(x_1) \left(\mathbb{1} - \sum_{m=2}^{N} p_m^{\sigma_j(x_1)} \right) \cdot (-\mathrm{i}\nabla_1) p_1 \tilde{\phi} \right\rangle \\
&+ 2\mathrm{i}N\mathrm{Im}\left\langle q_1\phi, \sum_{j=1}^{N} \lambda_j^{(\mathbf{a}\cdot\nabla)}(x_1) \left(\mathbb{1} - \sum_{m=2}^{N} p_m^{\chi_j(x_1)} \right) p_1 \tilde{\phi} \right\rangle \\
=:& M_V^{(1,1)} + M_V^{(1,2)}
\end{aligned}
$$

$$
\begin{aligned}
\left| M_V^{(1,1)} \right|^2 &\leq CN^2 \left| \left\langle q_1\phi, \sum_{j=1}^{N} q_{\neq 1}^{\sigma_j(x_1)} \lambda_j^{(\mathbf{a})}(x_1) \cdot (-\mathrm{i}\nabla_1) p_1 \tilde{\phi} \right\rangle \right|^2 \\
&\leq CN^2 \left| \sum_{j=1}^{N} \left\| \lambda_j^{(\mathbf{a})}(x_1) q_1 \phi \right\| \left\| q_{\neq 1}^{\sigma_j(x_1)} (-\mathrm{i}\nabla_1) p_1 \tilde{\phi} \right\| \right|^2 \\
&\leq CN^2 \left| \left\langle (-\mathrm{i}\nabla_1) p_1 \tilde{\phi}, \sum_{j=1}^{N} q_{\neq 1}^{\sigma_j(x_1)} (-\mathrm{i}\nabla_1) p_1 \tilde{\phi} \right\rangle \right| \left| \left\langle q_1\phi, \sum_{j=1}^{N} \left| \lambda_j^{(\mathbf{a})}(x_1) \right|^2 q_1 \phi \right\rangle \right|
\end{aligned}
$$

$$
\begin{aligned}
\left| M_V^{(1,1)} \right|^2 &\leq N^2 \sup_{x_1} \sum_{j=1}^{N} \left| \lambda_j^{(\mathbf{a})}(x_1) \right|^2 \|q_1\phi\|^2 \left((N-1) \left\| q_2 \tilde{\phi} \right\|^2 + \|\tilde{\phi}\|^2 \right) \\
&\leq N^2 \| |\mathbf{a}_N|^2 * \rho \|_\infty \left\| q_2 \tilde{\phi} \right\|^2 \left(\alpha_m(t) + N^{-1/2} \right) \\
&\leq N \| |\mathbf{a}_N|^2 * \rho \|_\infty \alpha_m(t) \left(\alpha_m(t) + N^{-1/2} \right)
\end{aligned}
$$

$$
\left| M_V^{(1,1)} \right| \lesssim \sqrt{N \| |\mathbf{a}_N|^2 * \rho \|_\infty} \left(\alpha_m(t) + N^{-1/2} \right)
$$

$$
\begin{aligned}
\left|M_V^{(1,2)}\right|^2 &\le CN^2 \left|\left\langle p_1\tilde{\phi}, \sum_{j=1}^{N} \lambda_j^{(\mathbf{a}\cdot\nabla)}(x_1)\left(\mathbb{1} - \sum_{m=2}^{N} p_m^{\chi_j(x_1)}\right) q_1\phi \right\rangle\right|^2 \\
&\le CN^2 \left|\left\langle q_1\phi, \sum_{j=1}^{N} \left|\lambda_j^{(\mathbf{a}\cdot\nabla)}(x_1)\right|^2 q_1\phi \right\rangle\right| \left|\left\langle p_1\tilde{\phi}, \sum_{j=1}^{N} q_{\neq 1}^{\sigma_j(x_1)} p_1\tilde{\phi} \right\rangle\right| \\
&\le CN^2 \left\|\left|\sum_{j=1}^{N} \left|\lambda_j^{(\mathbf{a}\cdot\nabla)}(x_1)\right|^2\right|\right\|_\infty \|q_1\phi\|_2^2 \left((N-1)\left\|q_2 p_1\tilde{\phi}\right\|_2^2 + \|\tilde{\phi}\|_2^2\right) \\
&\le CN^2 \left\|\sum_{j=1}^{N} \left|\left\langle u_j, v_{21}^2 u_j\right\rangle_2\right|\right\|_\infty N^{-1}\alpha_m(t)\left(\alpha_m(t) + N^{-1/2}\right) \\
&\lesssim N\||\mathbf{a}_N|^2 * \rho_\nabla\|_\infty \alpha_m(t)\left(\alpha_m(t) + \frac{1}{\sqrt{N}}\right)
\end{aligned}
$$

$$
\begin{aligned}
M_V^{(2)} &= \mathrm{i}N\mathrm{Im}\langle q_1 q_2\phi, W_{12}, p_1 p_2\tilde{\phi}\rangle \\
&= -\mathrm{i}N\mathrm{Im}\left\langle q_1\phi, \sum_{m=2}^{N} q_m(v_{1m} + v_{m1})p_m, p_1\tilde{\phi}\right\rangle
\end{aligned}
$$

$$
\begin{aligned}
\left|M_V^{(2)}\right|^2 &\le CN^2\|q_1\phi\|^2 \left\|\sum_{m=2}^{N} q_m(v_{1m} + v_{m1})p_m, p_1\tilde{\phi}\right\|^2 \\
&\lesssim N\alpha_m(t) \sum_{m,k=2}^{N} \langle q_m(v_{1m} + v_{m1})p_1 p_m, q_k(v_{1k} + v_{k1})p_1 p_k\rangle_{\tilde{\phi}} \\
&\lesssim N\alpha_m(t)(N-1)\langle p_1 p_2, (v_{12} + v_{21})q_2(v_{12} + v_{21})p_1 p_2\rangle_{\tilde{\phi}} \\
&\quad + N\alpha_m(t)(N-1)(N-2)\langle q_3 p_1 p_2, (v_{12} + v_{21})(v_{13} + v_{31})q_2 p_1 p_2\rangle_{\tilde{\phi}} \\
&\lesssim N\alpha_m(t)(N-1)\left\langle p_1 p_2, (v_{12}^2 + v_{21}^2)p_1 p_2\right\rangle_{\tilde{\phi}} \\
&\quad + CN^3\alpha_m(t)\langle q_3 p_1 p_2, (v_{12} + v_{21})(v_{13} + v_{31})q_2 p_1 p_2\rangle_{\tilde{\phi}} \\
&\lesssim N\alpha_m(t)\left((N-1)\left\langle p_1 p_2, v_{12}^2 p_1 p_2\right\rangle_{\tilde{\phi}} + N^2\left\langle p_1 p_2 q_3, v_{12}^2 p_1 p_2 q_3\right\rangle_{\tilde{\phi}}\right) \\
&\lesssim \alpha_m(t)N\||\mathbf{a}_N|^2 * \rho\|_\infty \left(\|\tilde{\phi}\|^2 + N\left\|q_3\tilde{\phi}\right\|^2\right) \\
&\lesssim N\||\mathbf{a}_N|^2 * \rho\|_\infty \alpha_m(t)\left(\alpha_m(t) + N^{-1/2}\right)
\end{aligned}
$$

$$
\begin{aligned}
M_V^{(3)} &= 2\mathrm{i}N\mathrm{Im}\langle q_1 q_2\phi, W_{12} p_1 q_2\tilde{\phi}\rangle_{\Psi_N} \\
&= 2\mathrm{i}N\mathrm{Im}\langle q_1 q_2\phi, \left(v'(x_1) - (N-1)(v_{12} + v_{21})\right)p_1 q_2\tilde{\phi}\rangle \\
&= 2\mathrm{i}N(N-1)\mathrm{Im}\langle q_1 q_2\phi, (v_{12} + v_{21})p_1 q_2\tilde{\phi}\rangle \\
&\quad + 2\mathrm{i}N\mathrm{Im}\langle q_1 q_2\phi, v'(x_1)p_1 q_2\tilde{\phi}\rangle \\
&= 4\mathrm{i}N(N-1)\mathrm{Im}\langle -\mathrm{i}(\nabla_1 - \nabla_2)q_1 q_2\phi, \mathbf{a}_N(x_1 - x_2)p_1 q_2\tilde{\phi}\rangle \\
&\quad + 2\mathrm{i}N\mathrm{Im}\langle q_1 q_2\phi, v'(x_1)p_1 q_2\tilde{\phi}\rangle
\end{aligned}
$$

$$\begin{aligned}\left|M_V^{(3)}\right|^2 \leq & CN^4\left\|\mathbf{a}_N(x_1-x_2)p_1q_2\tilde{\phi}\right\|^2(\|\nabla_1 q_1 q_2\phi\|^2+\|\nabla_2 q_1 q_2\phi\|^2)\\ & +CN^2\|q_1q_2\phi\|^2\left\|v'(x_1)p_1q_2\tilde{\phi}\right\|^2\\ \lesssim & N^3\||\mathbf{a}_N|^2*\rho\|_\infty\left\|q_2\tilde{\phi}\right\|^2\|\nabla_1q_1q_2\phi\|^2\\ & +CN^2\left\|q_2\tilde{\phi}\right\|^2\|q_2\phi\|^2(\||\mathbf{a}_N*\rho\|_\infty^2+\||\mathbf{a}_N|*J\|_\infty^2)\end{aligned}$$

$$\begin{aligned}\left|M_V^{(3)}\right| \lesssim & \left(\sqrt{N\||\mathbf{a}_N|^2*\rho\|_\infty}+\|\mathbf{a}_N*\rho\|_\infty+\||\mathbf{a}_N|*J\|_\infty\right)\alpha_m(t)\\ & +\sqrt{N\||\mathbf{a}_N|^2*\rho\|_\infty}\|\nabla_2q_2\Psi_N\|^2\end{aligned}$$

$$\begin{aligned}|M_V| \lesssim & \sqrt{N\||\mathbf{a}_N|^2*\rho\|_\infty}\|\nabla_2q_2\Psi_N\|^2+\left(\alpha_m(t)+\frac{1}{\sqrt{N}}\right)\\ & \times\left(\sqrt{N\||\mathbf{a}_N|^2*\rho\|_\infty}+\sqrt{N\||\mathbf{a}_N|^2*\rho_\nabla\|_\infty}+\||\mathbf{a}_N*\rho\|_\infty+\||\mathbf{a}_N|*J\|_\infty\right)\end{aligned}$$

$$W_{123}:=w_1'+w_2'+w_3'-(N-1)(N-2)(w_{123}+w_{213}+w_{312})$$

$$\tilde{w}(x_1,x_2,x_3):=w_{123}+w_{213}+w_{312}$$

$$\begin{aligned}M_W = & 2\mathrm{i}N\mathrm{Im}\left\langle\Psi_N,\widehat{m^{(1)}}^{1/2}q_1p_2p_3W_{123}p_1p_2p_3{}^{\widehat{m}^{(-1)}\ 1/2}\Psi_N\right\rangle\\ & +2\mathrm{i}N\mathrm{Im}\left\langle\Psi_N,\widehat{m^{(1)}}^{1/2}q_1q_2q_3W_{123}q_1q_2\widehat{m^{(-1)}}^{1/2}\Psi_N\right\rangle\\ & +2\mathrm{i}N\mathrm{Im}\left\langle\Psi_N,\widehat{m^{(2)}}^{1/2}q_1q_2p_3W_{123}p_1p_2\widehat{m^{(-2)}}^{1/2}\Psi_N\right\rangle\\ & +2\mathrm{i}N\mathrm{Im}\left\langle\Psi_N,\widehat{m^{(2)}}^{1/2}q_1q_2q_3W_{123}q_1p_2\widehat{m^{(-2)}}^{1/2}\Psi_N\right\rangle\\ & +6\mathrm{i}N\mathrm{Im}\left\langle\Psi_N,\widehat{m^{(1)}}^{1/2}q_1q_2p_3W_{123}q_1p_2\widehat{m^{(-1)}}^{1/2}\Psi_N\right\rangle\\ & +\frac{2\mathrm{i}}{3}N\mathrm{Im}\left\langle\Psi_N,\widehat{m^{(3)}}^{1/2}q_1q_2q_3W_{123}p_1p_2\widehat{m^{(-3)}}^{1/2}\Psi_N\right\rangle\\ =: & \sum_{i=1}^{6}M_W^{(i)}\end{aligned}$$

$$\begin{aligned}M_W^{(1)} = & 2\mathrm{i}N\mathrm{Im}\langle q_1\phi,p_2p_3W_{123}p_2p_3p_1\tilde{\phi}\rangle\\ = & 2\mathrm{i}N\mathrm{Im}\langle q_1\phi,p_2p_3\big(w_1'-(N-1)(N-2)(w_{123}+2w_{213})\big)p_2p_3p_1\tilde{\phi}\rangle\\ =: & M_W^{(1,1)}+M_W^{(1,2)}\end{aligned}$$

$$M_W^{(1,1)}:=2\mathrm{i}N\mathrm{Im}\langle q_1\phi,(\beta^2\mathbf{a}_N[\rho]^2(x_1)-(N-1)(N-2)p_2p_3w_{123}p_2p_3)p_1\tilde{\phi}\rangle$$

$$\begin{aligned}M_W^{(1,1)} = & 2\mathrm{i}\mathrm{Im}\left\langle q_1\phi,\left(\beta^2\mathbf{a}_N[\rho_u]^2(x_1)-\sum_{m=2}^{N}\sum_{n=3}^{N}p_mp_nw(x_1,x_m,x_n)p_mp_n\right)p_1\tilde{\phi}\right\rangle\\ = & 2\mathrm{i}\beta^2\mathrm{Im}\left\langle q_1\phi,\left(\left(\sum_{j=1}^{N}\lambda_j^{(\mathbf{a})}(x_1)\right)^2-\sum_{i,j=1}^{N}\lambda_j^{(\mathbf{a})}(x_1)\cdot\lambda_i^{(\mathbf{a})}(x_1)\sum_{m=2}^{N}p_m^{\sigma_j(x_1)}\sum_{n=3}^{N}p_n^{\sigma_i(x_1)}\right)p_1\tilde{\phi}\right\rangle\\ = & 2\mathrm{i}\beta^2\mathrm{Im}\left\langle q_1\phi,\left(\sum_{i,j=1}^{N}\lambda_i^{(\mathbf{a})}(x_1)\cdot\lambda_j^{(\mathbf{a})}(x_1)\right)\left(\mathbb{1}-\sum_{m=2}^{N}p_m^{\sigma_j(x_1)}\sum_{n=3}^{N}p_n^{\sigma_i(x_1)}\right)p_1\tilde{\phi}\right\rangle\end{aligned}$$

$$\left|M_W^{(1,1)}\right|^2 \leq CN^2 \left|\left\langle q_1\phi, \left(\sum_{j=1}^N \left|\lambda_j^{(\mathbf{a})}(x_1)\right|^2\right)^2 q_1\phi\right\rangle\right| \left|\left\langle p_1\tilde{\phi}, \sum_{i,j=1}^N \left(\mathbb{1} - \sum_{m=2}^N p_m^{\sigma_j(x_1)} \sum_{n=3}^N p_n^{\sigma_i(x_1)}\right) p_1\tilde{\phi}\right\rangle\right|$$

$$\lesssim N^2 \||\mathbf{a}_N|^2 * \rho\|_\infty^2 \|q_1\phi\|^2 \left(N^2\left\|q_2p_1\tilde{\phi}\right\|^2 + N\left\|p_1\tilde{\phi}\right\|^2\right)$$

$$\lesssim N^2 \||\mathbf{a}_N|^2 * \rho\|_\infty^2 \alpha_m(t)\left(\alpha_m(t) + N^{-1/2}\right)$$

$$M_W^{(1,2)} = 4\mathrm{i}N\mathrm{Im}\left\langle q_1\phi, (-(\beta\mathbf{a}_N * \beta\mathbf{a}_N[\rho]\rho)(x_1) - (N-1)(N-2)p_2p_3w_{213}p_2p_3)p_1\tilde{\phi}\right\rangle$$

$$(N-1)(N-2)p_2p_3w(x_2,x_1,x_3)p_2p_3 = \sum_{m=2}^N \sum_{n=3}^N p_mp_nw(x_m,x_1,x_n)p_mp_n$$

$$= \sum_{i,j=1}^N \sum_{m=2}^N \sum_{n=3}^N \left\langle \omega_i^{(x_1)}, \lambda_j^{(\mathbf{a}\cdot\mathbf{a})}(x_1,x_2)p_n^{\sigma_j(x_2)}\omega_i^{(x_1)}\right\rangle_2 p_m^{\omega_i(x_1)}$$

$$= \sum_{i,j=1}^N \left\langle \omega_i^{(x_1)}, \lambda_j^{(\mathbf{a}\cdot\mathbf{a})}(x_1,x_2)\omega_i^{(x_1)}\right\rangle_2$$

$$- \sum_{i,j=1}^N \left\langle \omega_i^{(x_1)}, \lambda_j^{(\mathbf{a}\cdot\mathbf{a})}(x_1,x_2)\omega_i^{(x_1)}\right\rangle_2 \left(\mathbb{1} - \sum_{m=2}^N p_m^{\omega_i(x_1)}\right)$$

$$- \sum_{i,j=1}^N \left\langle \omega_i^{(x_1)}, \lambda_j^{(\mathbf{a}\cdot\mathbf{a})}(x_1,x_2)\left(\mathbb{1} - \sum_{n=3}^N p_n^{\sigma_j(x_1)}\right)\omega_i(x_1)\right\rangle_2 \sum_{m=2}^N p_m^{\omega_i^{(x_1)}}$$

$$=: \int_{\mathbb{R}^4} \mathbf{a}_N(x_2-x_1)\cdot\mathbf{a}_N(x_2-x_3)\rho(x_2)\rho(x_3)\mathrm{d}x_2\,\mathrm{d}x_3 + e^{(1)} + e^{(2)}$$

$$= -(\mathbf{a}_N * \mathbf{a}_N[\rho]\rho)(x_1) + e^{(1)} + e^{(2)}$$

$$M_W^{(1,2)} = 2\mathrm{i}\beta^2N\mathrm{Im}\left\langle q_1\phi, \left(e^{(1)} + e^{(2)}\right)p_1\tilde{\phi}\right\rangle =: M_W^{(1,2,1)} + M_W^{(1,2,2)}$$

$$\left|M_W^{(1,2,1)}\right|^2 \lesssim N^2 \left|\left\langle p_1\tilde{\phi}, \sum_{i=1}^N \left\langle \omega_i^{(x_1)}, \mathbf{a}_N(x_2-x_1)\cdot\sum_{j=1}^N \lambda_j^{(\mathbf{a})}(x_2)\omega_i^{(x_1)}\right\rangle_2 \left(\mathbb{1} - \sum_{m=2}^N p_m^{\omega_i(x_1)}\right) q_1\phi\right\rangle\right|^2$$

$$\lesssim N^2 \left|\left\langle q_1\phi, \sum_{i=1}^N \left|\left\langle \omega_i^{(x_1)}, \mathbf{a}_N(x_2-x_1)\cdot\sum_{j=1}^N \lambda_j^{(\mathbf{a})}(x_2)\omega_i(x_1)\right\rangle_2\right| q_1\phi\right\rangle\right|$$

$$\times \left|\left\langle p_1\tilde{\phi}, \sum_{i=1}^N \left(\mathbb{1} - \sum_{m=2}^N p_m^{\omega_i(x_1)}\right)p_1\tilde{\phi}\right\rangle\right|$$

$$\lesssim N^2 \sup_{x_2}\left|\sum_{j=1}^N \lambda_j^{(\mathbf{a})}(x_2)\right|^2 \left(N\left\|q_2p_1\tilde{\phi}\right\|^2 + \left\|p_1\tilde{\phi}\right\|^2\right)$$

$$\times \left|\left\langle q_1\phi, \sum_{i=1}^N \left\langle \omega_i^{(x_1)}, \left|\mathbf{a}_N(x_2-x_1)\right|^2 \omega_i^{(x_1)}\right\rangle_2 q_1\phi\right\rangle\right|$$

$$\lesssim N^2 \|\mathbf{a}_N[\rho]\|_\infty^2 \||\mathbf{a}_N|^2 * \rho\|_\infty \|q_1\phi\|^2\left(\alpha_m(t) + N^{-1/2}\right)$$

$$\lesssim N \|\mathbf{a}_N[\rho]\|_\infty^2 \||\mathbf{a}_N|^2 * \rho\|_\infty \alpha_m(t)\left(\alpha_m(t) + N^{-1/2}\right)$$

$$\sum_{i=1}^{N}\left\langle \omega_i^{(x_1)}, \left|\mathbf{a}_N(x_2-x_1)\right|^2 \omega_i^{(x_1)}\right\rangle_2 = \sum_{i=1}^{N}\left\langle u_i, \left|\mathbf{a}_N(x_2-x_1)\right|^2 u_i\right\rangle_2 = (|\mathbf{a}_N|^2 * \rho)(x_1)$$

$$M_W^{(1,2,2)} := 4\mathrm{i}\beta^2 N \mathrm{Im}\langle p_1\tilde{\phi}, e^{(2)} q_1\phi\rangle,$$

$$\left|M_W^{(1,2,2)}\right|^2 \le CN^2 \left|\left\langle p_1\tilde{\phi}, \sum_{i=1}^{N}\left\langle \omega_i^{(x_1)}, \sum_{j=1}^{N}\lambda_j^{(\mathbf{a}\cdot\mathbf{a})}(x_1,x_2)\left(\mathbb{1}-\sum_{n=3}^{N} p_n^{\sigma_j(x_2)}\right)\omega_i^{(x_1)}\right\rangle_2 \sum_{m=2}^{N} p_m^{\omega_i(x_1)} q_1\phi\right\rangle\right|^2$$

$$\le CN^2 \left|\left\langle q_1\phi, \sum_{i=1}^{N}\sum_{m=2}^{N} p_m^{\omega_i(x_1)} q_1\phi\right\rangle_{\Psi_N(t)}\right| \left|\left\langle p_1\tilde{\phi}, \sum_{i=1}^{N}\left|\left\langle \omega_i^{(x_1)}, \sum_{j=1}^{N}\lambda_j^{(\mathbf{a}\cdot\mathbf{a})}\left(\mathbb{1}-\sum_{n=3}^{N} p_n^{\sigma_j(x_2)}\right)\omega_i^{(x_1)}\right\rangle\right|_2^2 p_1\tilde{\phi}\right\rangle\right|$$

$$\le CN^2 \left|\left\langle q_1\phi, \sum_{m=2}^{N} p_m q_1\phi\right\rangle\right| \left|\left\langle p_1\tilde{\phi}, \sum_{i=1}^{N}\left\langle \omega_i^{(x_1)}, \sum_{j=1}^{N}\left|\lambda_j^{(\mathbf{a}\cdot\mathbf{a})}(x_1,x_2)\right|^2 \omega_i^{(x_1)}\right\rangle_2 \left\langle \omega_i^{(x_1)}, \sum_{j=1}^{N} q_{\neq 2,3}^{\sigma_j(x_2)}\omega_i^{(x_1)}\right\rangle_2 p_1\tilde{\phi}\right\rangle\right|$$

$$\le CN^2\alpha_m(t)\||\mathbf{a}_N|^2 * \rho\|_\infty \times$$

$$\le CN^2\alpha_m(t)\||\mathbf{a}_N|^2 * \rho\|_\infty^2 \left|\left\langle p_1\tilde{\phi}, \sqrt{\sum_{i=1}^{N}\left|\left\langle \omega_i^{(x_1)}, \left|\mathbf{a}_N(x_2-x_1)\right|^2 \omega_i^{(x_1)}\right\rangle_2\right|^2} \left\langle \sum_{i=1}^{N}\left|\left\langle \omega_i^{(x_1)}, \sum_{j=1}^{N} q_{\neq 2,3}^{\sigma_j(x_2)}\omega_i^{(x_1)}\right\rangle_{j=1}^{N} q_{\neq 2,3}^{\sigma_j(x_2)}\omega_i^{(x_1)}\right\rangle_2 \tilde{\phi}\right\rangle \left|p_1^2\tilde{\phi}\right\rangle\right|$$

$$\le CN^2\alpha_m(t)\||\mathbf{a}_N|^2 * \rho\|_\infty^2 \left|\left\langle p_1\tilde{\phi}, \sum_{i=1}^{N}\left\langle \omega_i^{(x_1)}, \left(N-\sum_{n=3}^{N} p_n\right)\omega_i^{(x_1)}\right\rangle_2 p_1\tilde{\phi}\right\rangle\right|$$

$$\lesssim N^2\alpha_m(t)\||\mathbf{a}_N|^2 * \rho\|_\infty^2 \left(N\left\|q_3 p_1\tilde{\phi}\right\|^2 + \left\|p_1\tilde{\phi}\right\|\right)$$

$$\lesssim N^2\||\mathbf{a}_N|^2 * \rho\|_\infty^2 \alpha_m(t)\left(\alpha_m(t) + N^{-1/2}\right)$$

$$\left|M_W^{(1)}\right| \lesssim \left(N\||\mathbf{a}_N|^2 * \rho\|_\infty + \sqrt{N\|\mathbf{a}_N[\rho]\|_\infty^2\||\mathbf{a}_N|^2 * \rho\|_\infty}\right)\left(\alpha_m(t) + \frac{1}{\sqrt{N}}\right)$$

$$\begin{aligned}
M_W^{(2)} &= 2\mathrm{i}N\mathrm{Im}\langle q_1q_2p_3\tilde{\phi}, \left(w'(x_3) - (N-1)(N-2)\tilde{w}(x_1,x_2,x_3)\right)q_1q_2q_3\phi\rangle \\
&= -2\mathrm{i}N(N-1)(N-2)\mathrm{Im}\langle q_1q_2p_3\tilde{\phi}, \tilde{w}(x_1,x_2,x_3)q_1q_2q_3\phi\rangle \\
&\quad + 2\mathrm{i}N\mathrm{Im}\langle q_1q_2p_3\tilde{\phi}, w'(x_3)q_1q_2q_3\phi\rangle
\end{aligned}$$

$$\begin{aligned}
\left|M_W^{(2)}\right| &\le CN^3\left(\left\|\tilde{w}(x_1,x_2,x_3)q_1q_2p_3\tilde{\phi}\right\| + N^{-2}\left\|w'(x_3)q_1q_2p_3\tilde{\phi}\right\|\right)\|q_1q_2q_3\phi\| \\
&\le CN^3\left\langle q_1q_2\tilde{\phi}, p_3\left|\mathbf{a}_N(x_1-x_3)\right|^4 p_3q_1q_2\tilde{\phi}\right\rangle^{1/2} N^{-1/2}\sqrt{\alpha_m(t)} \\
&\quad + C\|\mathbf{a}_N[\rho_u]\|_\infty^2\alpha_m(t) \\
&\lesssim \alpha_m(t)\left(\|\mathbf{a}_N[\rho_u]\|_\infty^2 + N^{3/2}\||\mathbf{a}_N|^4 * \rho\|_\infty^{1/2}\right)
\end{aligned}$$

$$\|w'\|_\infty = \beta^2\|\mathbf{a}_N[\rho_u]^2 - 2\mathbf{a}_N * (\mathbf{a}_N[\rho_u]\rho_u)\|_\infty \le \beta^2\|\mathbf{a}_N[\rho_u]\|_\infty^2$$

$$
\begin{aligned}
M_W^{(3)} =& 2\mathrm{i}N(N-1)(N-2)\mathrm{Im}\langle q_1q_2p_3\phi, \tilde{w}(x_1,x_2,x_3)p_1p_2p_3\tilde{\phi}\rangle \\
=& 2\mathrm{i}N\mathrm{Im}\left\langle q_1\phi, \sum_{m=2}^{N}\sum_{n=3}^{N} q_mp_n\tilde{w}(x_1,x_m,x_n)p_mp_np_1\tilde{\phi}\right\rangle
\end{aligned}
$$

$$
\begin{aligned}
\left|M_W^{(3)}\right|^2 \leq& N^2 \sum_{m,m'=2}^{N}\sum_{n,n'=3}^{N} \|q_1\phi\|^2\langle q_mp_n\tilde{w}(x_1,x_m,x_n)p_mp_np_1\tilde{\phi}, q_{m'}p_{n'}\tilde{w}(x_1,x_{m'},x_{n'})p_{m'}p_{n'}p_1\tilde{\phi}\rangle \\
\leq& N^2(N-1)(N-2)\|q_1\phi\|^2\langle \tilde{w}(x_1,x_2,x_3)p_2p_3p_1\tilde{\phi}, q_2p_3\tilde{w}(x_1,x_2,x_3)p_2p_3p_1\tilde{\phi}\rangle \\
&+N^2(N-1)(N-2)(N-3)(N-4)\|q_1\phi\|^2\langle q_2p_3\tilde{w}(x_1,x_2,x_3)p_2p_3p_1\tilde{\phi}, q_4p_5\tilde{w}(x_1,x_4,x_5)p_4p_5p_1\tilde{\phi}\rangle
\end{aligned}
$$

$$
\begin{aligned}
\left|M_W^{(3)}\right|^2 \leq& N^4N^{-1}\alpha_m(t)\langle \tilde{\phi}, p_1p_2p_3\tilde{w}^2(x_1,x_2,x_3)p_2p_3p_1\tilde{\phi}\rangle \\
&+N^6N^{-1}\alpha_m(t)\langle p_3\tilde{w}(x_1,x_2,x_3)q_4p_2p_3p_1\tilde{\phi}, p_5\tilde{w}(x_1,x_4,x_5)q_2p_4p_5p_1\tilde{\phi}\rangle \\
\leq& N\||\mathbf{a}_N|^2 * \rho\|_\infty^2\alpha_m(t)\|\tilde{\phi}\|^2 + N^5\alpha_m(t)\langle q_4p_2p_3p_1\tilde{\phi}, \tilde{w}^2(x_1,x_2,x_3)q_4p_2p_3p_1\tilde{\phi}\rangle \\
\leq& N^2\||\mathbf{a}_N|^2 * \rho\|_\infty^2\alpha_m(t)\left(\alpha_m(t)+N^{-1/2}\right)
\end{aligned}
$$

$$
\begin{aligned}
M_W^{(4)} =& 2\mathrm{i}N(N-1)(N-2)\mathrm{Im}\langle q_1q_2q_3\phi, \tilde{w}(x_1,x_2,x_3)q_1p_2p_3\tilde{\phi}\rangle \\
\left|M_W^{(4)}\right|^2 \leq& N^6\|q_2q_3q_1\phi\|^2\left\|\tilde{w}(x_1,x_2,x_3)q_1p_2p_3\tilde{\phi}\right\|^2 \\
\lesssim& N^2\||\mathbf{a}_N|^2 * \rho\|_\infty^2\alpha_m(t)
\end{aligned}
$$

$$
\begin{aligned}
M_W^{(5)} =& 2\mathrm{i}N\mathrm{Im}\langle q_1q_2p_3\tilde{\phi}, \left(w'(x_2)-(N-1)(N-2)\tilde{w}(x_1,x_2,x_3)\right)q_1p_2p_3\phi\rangle \\
=& -2\mathrm{i}N(N-1)(N-2)\mathrm{Im}\langle q_1q_2p_3\tilde{\phi}, \tilde{w}(x_1,x_2,x_3)q_1p_2p_3\phi\rangle \\
&+2\mathrm{i}N\mathrm{Im}\langle q_1q_2p_3\tilde{\phi}, w'(x_2)q_1p_2p_3\phi\rangle \\
\left|M_W^{(5)}\right| \leq& CN^3(\|\tilde{w}(x_1,x_2,x_3)q_1p_2p_3\phi\| + N^{-2}\|w'(x_2)q_1p_2p_3\phi\|)\|q_1q_2p_3\tilde{\phi}\| \\
\lesssim& (N\||\mathbf{a}_N|^2 * \rho\|_\infty + \||\mathbf{a}_N| * \rho\|_\infty^2)\alpha_m(t)
\end{aligned}
$$

$$
\begin{aligned}
M_W^{(6)} =& 2\mathrm{i}N(N-1)(N-2)\mathrm{Im}\langle q_1q_2q_3\phi, \tilde{w}(x_1,x_2,x_3)p_1p_2p_3\tilde{\phi}\rangle \\
=& 2\mathrm{i}N\mathrm{Im}\left\langle q_1\phi, \sum_{m=2}^{N}\sum_{n=3}^{N} q_mq_n\tilde{w}(x_1,x_m,x_n)p_mp_np_1\tilde{\phi}\right\rangle
\end{aligned}
$$

$$
\begin{aligned}
\left|M_W^{(6)}\right|^2 \leq& N^2 \sum_{\substack{m,m'=2\\ n,n'=3}}^{N} \|q_1\phi\|^2\langle q_mq_n\tilde{w}(x_1,x_m,x_n)p_mp_np_1\tilde{\phi}, q_{m'}q_{n'}\tilde{w}(x_1,x_{m'},x_{n'})p_{m'}p_{n'}p_1\tilde{\phi}\rangle \\
=& N^2(N-1)(N-2)\|q_1\phi\|^2\langle \tilde{w}(x_1,x_2,x_3)p_2p_3p_1\tilde{\phi}, q_2q_3\tilde{w}(x_1,x_2,x_3)p_2p_3p_1\tilde{\phi}\rangle \\
&+N^2(N-1)(N-2)(N-3)(N-4)\|q_1\phi\|^2\langle q_2q_3\tilde{w}(x_1,x_2,x_3)p_2p_3p_1\tilde{\phi}, q_4q_5\tilde{w}(x_1,x_4,x_5)p_4p_5p_1\tilde{\phi}\rangle \\
\leq& N^3\alpha_m(t)\left\|\tilde{w}(x_1,x_2,x_3)p_2p_3p_1\tilde{\phi}\right\|^2 + N^5\alpha_m(t)\left\|\tilde{w}(x_1,x_2,x_3)q_5q_4p_3p_2p_1\tilde{\phi}\right\|^2 \\
\lesssim& N^2\||\mathbf{a}_N|^2 * \rho\|_\infty^2\alpha_m(t)\left(\alpha_m(t)+N^{-1/2}\right)
\end{aligned}
$$

$$
\begin{aligned}
\sum_{i=1}^{6} M_W^{(6)} \lesssim& \left(N\||\mathbf{a}_N|^2 * \rho\|_\infty + \||\mathbf{a}_N| * \rho\|_\infty^2 + N^{3/2}\||\mathbf{a}_N|^4 * \rho\|_\infty^{1/2} + \sqrt{N\|\mathbf{a}_N[\rho]\|_\infty^2\||\mathbf{a}_N|^2 * \rho\|_\infty}\right) \\
&\times\left(\alpha_m(t)+\frac{1}{\sqrt{N}}\right)
\end{aligned}
$$

$$
E_N(t) := \langle \Psi_N(t), H_{N,R}\Psi_N(t)\rangle \text{ and } \mathcal{E}_R^{\mathrm{af}}[\omega(t)] := \mathrm{tr}[(-\mathrm{i}\nabla + \mathbf{a}_N[\rho])^2\omega(t)]
$$

$$E_N(t) = E_N(0) = \mathcal{E}_R^{\mathrm{af}}[\omega(0)] + O\big(N^{s(1+2r)}\big) = \mathcal{E}_R^{\mathrm{af}}[\omega(t)] + O\big(N^{s(1+2r)}\big)$$

$$\big|E_N(0) - \mathcal{E}_R^{\mathrm{af}}[\omega(0)]\big| = \big|E_N(t) - \mathcal{E}_R^{\mathrm{af}}[\omega(t)]\big| \leq O\big(N^{s(1+2r)}\big)$$

$$\begin{aligned} E_N(t) - \mathcal{E}_R^{\mathrm{af}}[\omega(t)] =& N\left\langle \Phi, \left(\Delta_1 + (N-1)v_{12} + (N-1)(N-2)w_{123} + \frac{g}{2}N(N-1)|\mathbf{a}_N|_{12}^2\right)\Phi\right\rangle \\ &+\beta^2 N(N-1)\langle \Psi_N, |\mathbf{a}_N|_{12}^2 \Psi_N\rangle + \mathcal{E} \end{aligned}$$

$$\mathcal{E}_R^{\mathrm{af}}[\omega(t)] = \sum_{j=1}^{N} \left\langle u_j, \left(-\Delta + 2\beta(-\mathrm{i}\nabla)\cdot \mathbf{a}_N[\rho] + \beta^2|\mathbf{a}_N[\rho]|^2 + \frac{g}{2}N\mathbf{a}_N^2[\rho]\right)u_j\right\rangle$$

$$\begin{aligned} E_N(t) =& N\langle \Psi_N, (-\Delta_1 + (N-1)v_{12} + (N-1)(N-2)w_{123})\Psi_N\rangle \\ &+ N(N-1)\left\langle \Psi_N, \left(\frac{gN}{2} + \beta^2\right)\Big|\mathbf{a}_N\Big|^2 (x_1 - x_2)\Psi_N\right\rangle \end{aligned}$$

$$v_{12} = (-\mathrm{i}\nabla_1)\cdot \mathbf{a}_N(x_1 - x_2) + \text{ h.c. } \text{ and } w_{123} := \mathbf{a}_N(x_1 - x_2)\cdot \mathbf{a}_N(x_1 - x_3).$$

$$\begin{aligned} E_N(t) - \mathcal{E}_R^{\mathrm{af}}[\omega(t)] =& N\langle \Psi, p_1p_2p_3(-\Delta_1)p_1p_2p_3\Psi\rangle - \sum_{j=1}^{N}\langle u_j, (-\Delta)u_j\rangle \\ &+N(N-1)\langle \Psi, p_1p_2p_3 v_{12} p_1p_2p_3\Psi\rangle - \sum_{j=1}^{N}\langle u_j, \tilde{v}u_j\rangle \\ &+N(N-1)(N-2)\langle \Psi, p_1p_2p_3 w_{123} p_1p_2p_3\Psi\rangle - \sum_{j=1}^{N}\langle u_j, \tilde{w}u_j\rangle \\ &+\frac{g}{2}N^2(N-1)\langle \Psi, p_1p_2p_3|\mathbf{a}_N\Big|_{12}^2 p_1p_2p_3\Psi\Big\rangle - \frac{g}{2}N\sum_{j=1}^{N}\langle u_j, \mathbf{a}_N^2[\rho]u_j\rangle \\ &+2N\mathrm{Re}\langle \Psi, p_1p_2p_3(-\Delta_1)\Phi\rangle \\ &+2N(N-1)\mathrm{Re}\langle \Psi, p_1p_2p_3 v_{12}\Phi\rangle \\ &+2N(N-1)(N-2)\mathrm{Re}\langle \Psi, p_1p_2p_3 w_{123}\Phi\rangle \\ &+gN^2(N-1)\mathrm{Re}\langle \Psi, p_1p_2p_3|\mathbf{a}_N|_{12}^2\Phi\rangle \\ &+\beta^2 N(N-1)\langle \Psi_N, |\mathbf{a}_N|_{12}^2\Psi_N\rangle \\ &+N\left\langle \Phi, \left(-\Delta_1 + (N-1)v_{12} + (N-1)(N-2)w_{123} + \frac{g}{2}N(N-1)|\mathbf{a}_N|_{12}^2\right)\Phi\right\rangle \end{aligned}$$

$$\begin{aligned} E_N(t) - \mathcal{E}_R^{\mathrm{af}}[\omega] =:& E^{(\Delta)} + E^{(v)} + E^{(w)} + E^{(\mathbf{a})} \\ &+R^{(\Delta)} + R^{(v)} + R^{(w)} + R^{(\mathbf{a})} + \beta^2 N(N-1)\langle \Psi_N, |\mathbf{a}_N|_{12}^2\Psi_N\rangle \\ &+N\left\langle \Phi, \left(-\Delta_1 + (N-1)v_{12} + (N-1)(N-2)w_{123} + \frac{g}{2}N(N-1)|\mathbf{a}_N|_{12}^2\right)\Phi\right\rangle \end{aligned}$$

$$\hat{m}(\xi) := \sum_{k=0}^{N}\left(\frac{k}{N}\right)^{\xi} P_N^{(k)}$$

$$
\begin{aligned}
\left|E^{(\Delta)}\right| &\leq \left|\langle \Psi, (N-2)p_1p_2p_3(-\Delta_1)p_1p_2p_3\Psi\rangle - \sum_{j=1}^{N} \langle u_j, (-\Delta)u_j\rangle\right| \\
&= \left|\left\langle \Psi, \sum_{j=1}^{N} \lambda_j^{(\Delta)} \sum_{\substack{m=1 \\ m\neq 2,3}}^{N} p_m^{\chi_j^{(\Delta)}} p_2p_3\Psi\right\rangle - \sum_{j=1}^{N} \lambda_j^{(\Delta)}\right| \\
&= \left|\sum_{j=1}^{N} \lambda_j^{(\Delta)} \left\langle \Psi, \left(\mathbb{1} - \sum_{m=1}^{N} p_m^{\chi_j^{(\Delta)}} p_2p_3\right)\Psi\right\rangle\right| \\
&\leq \sqrt{\sum_{j=1}^{N} \left|\lambda_j^{(\Delta)}\right|^2 \|\hat{m}(1/4)\Psi\|^2} \sqrt{\left\langle \hat{m}(-1/2)\Psi, \left(N - \sum_{j=1}^{N}\sum_{m=1}^{N} p_m^{\chi_j^{(\Delta)}} p_2p_3\right)\Psi\right\rangle} \\
&\leq \sqrt{\alpha_m} \sqrt{\sum_{j=1}^{N} \|\Delta u_j\|_2^2} \left\langle \hat{m}(-1/2)\Psi, \left(N - \sum_{m=1}^{N} p_m p_2 p_3\right)\Psi\right\rangle^{1/2} \Psi\Big\rangle^{1/2} \\
&= \sqrt{\alpha_m}\sqrt{N}\langle \hat{m}(-1/2)\Psi, (N-(N-2)p_1p_2p_3)\Psi\rangle^{1/2} \\
&\leq \sqrt{\alpha_m} N \langle \hat{m}(-1/2)\Psi, (p_1p_2p_3 - \mathbb{1})\Psi\rangle^{1/2} + 2\sqrt{\alpha_m}\sqrt{N}\langle \Psi, p_1p_2p_3\Psi\rangle^{1/2} \\
&\leq \sqrt{\alpha_m} N \langle \Psi, \hat{m}(-1/2)q_2\Psi\rangle^{1/2} + 2\sqrt{\alpha_m}\sqrt{N}\langle \Psi, p_1p_2p_3\Psi\rangle^{1/2} \\
&\leq N\left(\alpha_m(t) + \frac{C}{\sqrt{N}}\right)
\end{aligned}
$$

$$
\hat{m}(-1/2)q_2 = \sum_{k\in\mathbb{Z}} \frac{\sqrt{N}}{\sqrt{k}} \frac{k}{N} P_N^{(k)} = \hat{m}(1/2)
$$

$$
\begin{aligned}
\left|E^{(v)}\right| &= \langle \Psi, p_1p_2N(N-1)v_{12}p_1p_2p_3\Psi\rangle - \sum_{j=1}^{N} \langle u_j, \tilde{v}u_j\rangle \\
&= \left\langle \Psi, \left(\sum_{m=1}^{N} \sum_{\substack{n=1 \\ n\neq m}}^{N} p_n p_m v_{nm} p_m p_n p_3 - \sum_{j=1}^{N} \lambda_j^{(v)}\right)\Psi\right\rangle \\
&= \left\langle \Psi, \left(\sum_{m=1}^{N} \sum_{\substack{n=1 \\ n\neq m}}^{N} \sum_{j,k=1}^{N} \left\langle \sigma_k \langle \chi_j, v_{nm}\chi_j\rangle_m \sigma_k\right\rangle_n p_n^{\sigma_k} p_m^{\chi_j} p_3 - \sum_{j=1}^{N} \lambda_j^{(v)}\right)\Psi\right\rangle
\end{aligned}
$$

$$
\begin{aligned}
\left|E^{(v)}\right| &= \sum_{j,k=1}^{N} \left\langle \left\langle \sigma_k \langle \chi_j, v_{nm}\chi_j\rangle_m \sigma_k \right\rangle_n \hat{m}(1/4)\hat{m}(-1/4)\Psi, \left(\mathbb{1} - \sum_{m=1}^{N}\sum_{n=1}^{N} p_n^{\sigma_k} p_m^{\chi_j} p_3\right)\Psi \right\rangle \\
&\leq \|\hat{m}(1/4)\Psi\| \sqrt{\sum_{j,k=1}^{N} \left|\left\langle \sigma_k \langle \chi_j, v_{1m}\chi_j\rangle_m \sigma_k \right\rangle_1\right|^2} \left\langle \hat{m}(-1/2)\Psi, \sum_{j,k=1}^{N} \left(\mathbb{1} - \sum_{m=1}^{N}\sum_{\substack{n=1\\ n\neq m}}^{N} p_n^{\sigma_k} p_m^{\chi_j} p_3\right)\Psi \right\rangle^{1/2} \\
&\leq \sqrt{\alpha_m} \left\langle \hat{m}(-1/2)\Psi, \left(N^2 - \sum_{m=1}^{N}\sum_{\substack{n=1\\ n\neq m}}^{N} p_n p_m p_3\right)\Psi \right\rangle^{1/2} \\
&\leq \sqrt{\alpha_m} N \langle \hat{m}(-1/2)\Psi, (p_1p_2p_3 - \mathbb{1})\Psi\rangle^{1/2} + \sqrt{\alpha_m}\sqrt{N}\langle \hat{m}(-1/2)\Psi, p_1p_2p_3\Psi\rangle^{1/2} \\
&\leq N\left(\alpha_m + CN^{-1/2}\right)
\end{aligned}
$$

$$
\begin{aligned}
\sum_{j,k} \left\langle \sigma_k \langle \chi_j, v_{1m}\chi_j\rangle_m \sigma_k \right\rangle_1^2 &= \sum_{j,k} \left\langle u_k \langle u_j, v_{1m} u_j\rangle_m u_k \right\rangle_1^2 \leq \sum_{j,k} \left\langle u_k \langle u_j, v_{12}^2 u_j\rangle_2 u_k \right\rangle_1 \\
&\leq \sum_k \left\langle \nabla u_k, \left|\mathbf{a}_N\right|^2 * \rho \nabla u_k \right\rangle_2 \leq \||\mathbf{a}_N|^2 * \rho\|_\infty \sum_{j=1}^{N} \left\|\nabla u_j\right\|_2^2 \simeq 1
\end{aligned}
$$

$$
\begin{aligned}
\left|E^{(w)}\right| &= \left| N(N-1)(N-2)\langle \Psi, p_1p_2p_3 w_{123} p_1p_2p_3\Psi\rangle - \sum_{j=1}^{N} \langle u_j, \tilde{w} u_j\rangle \right| \\
&= \left| \left\langle \Psi, \left(\sum_{m=1}^{N} \sum_{\substack{o=1\\ o\neq m}}^{N} \sum_{\substack{n=1\\ n\neq m, n\neq o}}^{N} p_o p_n p_m w_{mno} p_m p_n p_o - \sum_{j=1}^{N} \lambda_j^{(w)} \right)\Psi \right\rangle \right| \\
&= \left| \left\langle \Psi, \left(\sum_{m=1}^{N} \sum_{\substack{o=1\\ o\neq m}}^{N} \sum_{\substack{n=1\\ n\neq m, n\neq o}}^{N} \sum_{j,k,\ell=1}^{N} \langle \chi_j \otimes \sigma_k \otimes \omega_\ell, w_{mno}\chi_j \otimes \sigma_k \otimes \omega_\ell\rangle p_n^{\sigma_k} p_m^{\chi_j} p_o^{\omega_\ell} - \sum_{j=1}^{N} \lambda_j^{(w)} \right)\Psi \right\rangle \right| \\
&= \left| \sum_{j,k,\ell=1}^{N} \left\langle \langle \chi_j \otimes \sigma_k \otimes \omega_\ell, w_{mno}\chi_j \otimes \sigma_k \otimes \omega_\ell\rangle \hat{m}(1/4)\hat{m}(-1/4)\Psi, \left(\mathbb{1} - \sum_{m=1}^{N}\sum_{\substack{o=1\\ o\neq m}}^{N}\sum_{\substack{n=1\\ n\neq m, n\neq o}}^{N} p_n^{\sigma_k} p_m^{\chi_j} p_o^{\omega_\ell}\right)\Psi \right\rangle \right|
\end{aligned}
$$

$$
\begin{aligned}
\left|E^{(w)}\right| &\leq \|\hat{m}(1/4)\Psi\| \sqrt{\sum_{j,k,\ell=1}^{N} \left|\langle \chi_j \otimes \sigma_k \otimes \omega_\ell, w_{mno}\chi_j \otimes \sigma_k \otimes \omega_\ell\rangle_{m,n,o}\right|^2} \\
&\quad \times \left\langle \hat{m}(-1/2)\Psi, \sum_{j,k,\ell=1}^{N} \left(\mathbb{1} - \sum_{m=1}^{N}\sum_{\substack{o=1\\ o\neq m}}^{N}\sum_{\substack{n=1\\ n\neq m, n\neq o}}^{N} p_n^{\sigma_k} p_m^{\chi_j} p_o^{\omega_\ell}\right)\Psi \right\rangle^{1/2} \\
&\leq \sqrt{\alpha_m} N^{-1/2} \left\langle \hat{m}(-1/2)\Psi, \left(N^3 - \sum_{m=1}^{N}\sum_{\substack{o=1\\ o\neq m}}^{N}\sum_{\substack{n=1\\ n\neq m, n\neq o}}^{N} p_n p_m p_o\right)\Psi \right\rangle^{1/2} \\
&\leq \sqrt{\alpha_m} N \langle \hat{m}(-1/2)\Psi, (p_1p_2p_3 - \mathbb{1})\Psi\rangle^{1/2} + C\sqrt{\alpha_m}\sqrt{N}\langle \hat{m}(-1/2)\Psi, \Psi\rangle^{1/2} \\
&\leq N\left(\alpha_m + N^{-1/2}\right)
\end{aligned}
$$

$$
\begin{aligned}
\left|E^{(\mathbf{a})}\right| &= \left|\frac{g}{2}N^2(N-1)\langle\Psi, p_1p_2p_3|\mathbf{a}_N|_{12}^2 p_1p_2p_3\Psi\rangle - \frac{g}{2}N\sum_{j=1}^{N}\langle u_j, \mathbf{a}_N^2[\rho]u_j\rangle\right| \\
&= \left|\frac{g}{2}N\left\langle\Psi, \left(\sum_{m=1}^{N}\sum_{\substack{n=1\\ n\neq m}}^{N} p_np_m|\mathbf{a}_N|_{nm}^2 p_mp_np_3 - \sum_{j=1}^{N}\lambda_j^{(\mathbf{a}^2)}\right)\Psi\right\rangle\right| \\
&= \left|\frac{g}{2}N\left\langle\Psi, \left(\sum_{m=1}^{N}\sum_{n=1}^{N}\sum_{j,k=1}^{N}\left\langle\sigma_k\langle\eta_j, |\mathbf{a}_N|_{nm}^2\eta_j\rangle_m\sigma_k\right\rangle_n p_n^{\sigma_k}p_m^{\eta_j}p_3 - \sum_{j=1}^{N}\lambda_j^{(\mathbf{a}^2)}\right)\Psi\right\rangle|\Psi\rangle\rangle \\
&= \frac{g}{2}N\left|\sum_{j,k=1}^{N}\left\langle\left\langle\sigma_k\langle\eta_j, |\mathbf{a}_N|_{nm}^2\eta_j\rangle_m\sigma_k\right\rangle_n \hat{m}(1/4)\hat{m}(-1/4)\Psi, \left(\mathbb{1} - \sum_{m=1}^{N}\sum_{n=1}^{N} p_n^{\sigma_k}p_m^{\eta_j}p_3\right)\Psi\right\rangle|\Psi_{n\neq m}\rangle\right. \\
&\leq CN\|\hat{m}(1/4)\Psi\|\sqrt{\sum_{j,k=1}^{N}\left|\left\langle\sigma_k\langle\eta_j, |\mathbf{a}_N|_{1m}^2\eta_j\rangle_m\sigma_k\right\rangle_1\right|^2}\left\langle\hat{m}(-1/2)\Psi, \sum_{j,k=1}^{N}\left(\mathbb{1} - \sum_{m=1}^{N}\sum_{n=1}^{N} p_n^{\sigma_k}p_m^{\eta_j}p_3\right)\Psi\right\rangle^{1/2}
\end{aligned}
$$

$$
\begin{aligned}
\sum_{j,k}\left\langle\sigma_k\langle\eta_j, |\mathbf{a}_N|_{1m}^2\eta_j\rangle_m\sigma_k\right\rangle_1^2 &= \sum_{j,k}\left\langle u_k\langle u_j, |\mathbf{a}_N|_{1m}^2 u_j\rangle_m u_k\right\rangle_1^2 \leq \sum_{j,k}\left\langle u_k\langle u_j, |\mathbf{a}_N|_{12}^4 u_j\rangle_2 u_k\right\rangle_1 \\
&\leq \sum_k \langle u_k, (|\mathbf{a}_N|^4 * \rho)u_k\rangle_2 \\
&\leq \||\mathbf{a}_N|^4 * \rho\|_\infty N \simeq N^{-2}
\end{aligned}
$$

$$
\begin{aligned}
&\leq C\sqrt{\alpha_m}\left\langle\hat{m}(-1/2)\Psi, \left(N^2 - \sum_{m=1}^{N}\sum_{\substack{n=1\\ n\neq m}}^{N} p_np_mp_3\mathbb{1}\right)\Psi\right\rangle^{1/2} \\
&\leq CN\sqrt{\alpha_m}\langle\hat{m}(-1/2)\Psi, (\mathbb{1} - p_1p_2p_3)\Psi\rangle^{1/2} + C\sqrt{N}\sqrt{\alpha_m}\langle\hat{m}(-1/2)\Psi, \Psi\rangle^{1/2} \\
&\leq CN\left(\alpha_m + N^{-1/2}\right)
\end{aligned}
$$

$$
\begin{aligned}
\left|R^{(\Delta)}\right| &\leq 2N|\langle\Psi, p_1p_2p_3(-\Delta_1)\Phi\rangle| \\
&= 2N|\langle\Psi, p_1p_2p_3(-\Delta_1)\hat{m}(1/4)\hat{m}(-1/4)q_1p_2p_3\Psi\rangle| \\
&\leq CN\|\hat{m}(-1/4)q_1\Psi\|\langle\Psi, \hat{m}(1/2)p_1p_2p_3(-\Delta_1)p_1p_2p_3\Psi\rangle^{1/2} \\
&\leq CN\|\hat{m}(1/4)\Psi\|\langle\hat{m}(1/4)\Psi, p_1(-\Delta_1)p_1\hat{m}(1/4)\Psi\rangle^{1/2} \\
&\leq CN\|\hat{m}(1/4)\Psi\|^2 \\
&\leq CN\alpha_m(t)
\end{aligned}
$$

$$
\begin{aligned}
\left|R^{(v)}\right| &\leq 2N(N-1)|\langle\Psi, p_1p_2p_3v_{12}\Phi\rangle| \\
&= 2N(N-1)|\langle\Psi, p_1p_2p_3v_{12}(q_1p_2p_3 + p_1q_2p_3 + q_1q_2p_3 + q_1q_2q_3)\Psi\rangle| \\
&= 2N(N-1)|\langle\hat{m}(1/4)v_{12}p_1p_2p_3\Psi, \hat{m}(-1/4)(q_1p_2p_3 + p_1q_2p_3 + q_1q_2p_3 + q_1q_2q_3)\Psi\rangle| \\
&\leq CN^2\langle p_3\hat{m}(1/4)\Psi, p_1p_2v_{12}^2p_1p_2p_3\hat{m}(1/4)\Psi\rangle^{1/2}\|\hat{m}(-1/4)(q_1p_2p_3 + p_1q_2p_3 + q_1q_2p_3 + q_1q_2q_3)\Psi\| \\
&\leq CN\|\hat{m}(1/4)\Psi\|\|\hat{m}(-1/4)q_1\Psi\| \\
&\leq CN\alpha_m(t)
\end{aligned}
$$

$$
\begin{aligned}
\left|R^{(w)}\right| &\leq 2N(N-1)(N-2)|\langle\Psi, p_1p_2p_3w_{123}\Phi\rangle| \\
&= 2N(N-1)(N-2)|\langle\Psi, p_1p_2p_3w_{123}(q_1p_2p_3+p_1q_2p_3+p_1p_2q_3+p_1q_2q_3+q_1p_2q_3+q_1q_2p_3+q_1q_2q_3)\Psi\rangle| \\
&= 2N(N-1)(N-2)|\langle\hat{m}(1/4)w_{123}p_1p_2p_3\Psi, \hat{m}(-1/4)(q_1p_2p_3+2p_1p_2q_3+p_1q_2q_3+2q_1q_2p_3+q_1q_2q_3)\Psi\rangle| \\
&\leq CN^3\langle\hat{m}(1/4)\Psi, p_1p_2p_3w_{123}^2p_1p_2p_3\hat{m}(1/4)\Psi\rangle^{1/2}\|\hat{m}(-1/4)(q_1p_2p_3+2p_1p_2q_3+p_1q_2q_3+2q_1q_2p_3+q_1q_2q_3) \\
&\leq CN\|\hat{m}(1/4)\Psi\|\|\hat{m}(-1/4)q_1\Psi\| \\
&\leq CN\alpha_m(t)
\end{aligned}
$$

$$
\begin{aligned}
\left|R^{(\mathbf{a})}\right| &\leq CN^3|\langle\Psi, p_1p_2p_3|\mathbf{a}_N|_{12}^2\Phi\rangle| \\
&= CN^3|\langle\Psi, p_1p_2p_3|\mathbf{a}_N|_{12}^2(q_1p_2p_3+p_1q_2p_3+q_1q_2p_3+q_1q_2q_3)\Psi\rangle| \\
&= CN^3|\langle\hat{m}(1/4)|\mathbf{a}_N|_{12}^2p_1p_2p_3\Psi, \hat{m}(-1/4)(q_1p_2p_3+p_1q_2p_3+q_1q_2p_3+q_1q_2q_3)\Psi\rangle| \\
&\leq CN^3\langle p_3\hat{m}(1/4)\Psi, p_1p_2|\mathbf{a}_N|_{12}^4p_1p_2p_3\hat{m}(1/4)\Psi\rangle^{1/2}\|\hat{m}(-1/4)(q_1p_2p_3+p_1q_2p_3+q_1q_2p_3+q_1q_2q_3)\Psi\| \\
&\leq CN\|\hat{m}(1/4)\Psi\|\|\hat{m}(-1/4)q_1\Psi\| \\
&\leq CN\alpha_m(t)
\end{aligned}
$$

$$
\|\nabla_1 q_1\Psi_N\|^2 \lesssim \frac{\left|E_N(t)-\mathcal{E}_R^{\mathrm{af}}[\omega(t)]\right|}{N}+\alpha_m(t)+\frac{1}{\sqrt{N}}
$$

$$
\begin{aligned}
\|\nabla_1 q_1\Psi_N(t)\| &= \left\|\nabla_1\big(1-p_1(p_2+q_2)(p_3+q_3)\big)\Psi_N(t)\right\| \\
&\leq \|\nabla_1(1-p_1p_2p_3)\Psi_N(t)\|+3\|\nabla_1p_1q_2\Psi_N(t)\| \\
&\leq \|\nabla_1\Phi\|+3\left\langle\Psi_N(t), \hat{m}\left(\frac{1}{2}\right)\Psi_N(t)\right\rangle^{1/2}
\end{aligned}
$$

$$
\begin{aligned}
N\kappa\langle\Phi,(-\Delta_1)\Phi\rangle \leq& \left(E_{\Psi_N}-\mathcal{E}_R^{\mathrm{af}}[\omega]\right)+N\left(\alpha_m(t)+\frac{1}{\sqrt{N}}\right) \\
&-N\left\langle\Phi,\left(-(1-\kappa)\Delta_1+(N-1)v_{12}+(N-1)(N-2)w_{123}+\frac{g}{2}N(N-1)|\mathbf{a}_N|_{12}^2\right)\Phi\right\rangle
\end{aligned}
$$

$$
\left\langle\Phi,\left(-(1-\kappa)\Delta_1+(N-1)v_{12}+(N-1)(N-2)w_{123}+\frac{g}{2}N(N-1)|\mathbf{a}_N|_{12}^2\right)\Phi\right\rangle \geq 0
$$

$$
\begin{aligned}
|Nv_{12}| &\leq \frac{1}{4}(-\Delta_1)+4\beta^2N^2|\mathbf{a}_N|_{12}^2 \\
N^2|w_{123}| &\leq 2\beta^2N^2|\mathbf{a}_N|_{12}^2
\end{aligned}
$$

$$
\frac{1}{4}(-\Delta_1)+\left(\frac{g}{2}-6\beta^2\right)N^2|\mathbf{a}_N|_{12}^2 \geq \left(\frac{g}{2}-6\beta^2\right)
$$

$$
\begin{aligned}
\omega_N^{(1)}(x_1;y_1) =& \frac{1}{N!}\sum_{\sigma\in S_N}\sum_{\sigma'\in S_N}\mathrm{sgn}(\sigma)\mathrm{sgn}(\sigma')\overline{\psi_{\sigma(1)}(x_1)}\psi_{\sigma'(1)}(y_1) \\
&\int_{\mathbb{R}^{2(N-1)}}\overline{\psi_{\sigma(2)}(u_2)\psi_{\sigma'(2)}(u_2)\dots\psi_{\sigma(N)}(u_N)}\psi_{\sigma'(N)}(u_N)\mathrm{d}u_2\dots\mathrm{d}u_N \\
=& \frac{1}{N!}\sum_{\sigma,\sigma'\in S_N}\mathrm{sgn}(\sigma)\mathrm{sgn}(\sigma')\left(\prod_{j=2}^{N}\delta_{\sigma(j),\sigma'(j)}\right)\overline{\psi_{\sigma(1)}(x_1)}\psi_{\sigma'(1)}(y_1) \\
=& \frac{1}{N}\sum_{\sigma(1)=1}^{N}\overline{\psi_{\sigma(1)}(x_1)}\psi_{\sigma(1)}(y_1)
\end{aligned}
$$

$$\omega_N^{(2)}(x_1,x_2;y_1,y_2) = \frac{1}{N!}\sum_{\sigma\in S_N}\sum_{\sigma'\in S_N} \operatorname{sgn}(\sigma)\operatorname{sgn}(\sigma')\overline{\psi_{\sigma(1)}(x_1)}\psi_{\sigma'(1)}(y_1)\overline{\psi_{\sigma(1)}(x_2)}\psi_{\sigma'(1)}(y_2)$$

$$\int_{\mathbb{R}^{2(N-2)}} \overline{\psi_{\sigma(3)}(u_3)\psi_{\sigma'(3)}(u_3)\dots\psi_{\sigma(N)}(u_N)}\psi_{\sigma'(N)}(u_N)\mathrm{d}u_3\dots\,\mathrm{d}u_N$$

$$= \frac{1}{N!}\sum_{\sigma,\sigma'\in S_N} \operatorname{sgn}(\sigma)\operatorname{sgn}(\sigma')\left(\prod_{j=3}^{N}\delta_{\sigma(j),\sigma'(j)}\right)\overline{\psi_{\sigma(1)}(x_1)}\psi_{\sigma'(1)}(y_1)\overline{\psi_{\sigma(2)}(x_2)}\psi_{\sigma'(2)}(y_2)$$

$$= \frac{1}{N(N-1)}\sum_{j=1}^{N}\sum_{k=1}^{N}\left(\overline{\psi_j(x_1)}\psi_j(y_1)\overline{\psi_k(x_2)}\psi_k(y_2) - \overline{\psi_j(x_1)}\psi_k(y_1)\overline{\psi_k(x_2)}\psi_j(y_2)\right)$$

$$= \frac{1}{N(N-1)}\sum_{j=1}^{N}\sum_{k=1}^{N}\overline{\psi_j(x_1)\psi_k(x_2)}(\mathbb{1}-U_{jk})\psi_j(y_1)\psi_k(y_2)$$

$$\overline{\psi_{\sigma(1)}(x_1)}\psi_{\sigma'(1)}(y_1)\overline{\psi_{\sigma(2)}(x_2)}\psi_{\sigma'(2)}(y_2)\overline{\psi_{\sigma(3)}(x_3)}\psi_{\sigma'(3)}(y_3)$$

$$W_1 = (-\mathrm{i}\nabla_1)^2$$
$$W_{12} = (-\mathrm{i}\nabla_1)\cdot\mathbf{a}_N(x_1-x_2) + \mathbf{a}_N(x_1-x_2)\cdot(-\mathrm{i}\nabla_1)$$
$$W_{123} = \mathbf{a}_N(x_1-x_2)\cdot\mathbf{a}_N(x_1-x_3)$$

$$\begin{aligned}\langle H_{N,R}\rangle_{\mathrm{SL}} = \mathcal{E}_R^{\mathrm{af}}[\omega] &- \int_{\mathbb{R}^4}\omega(x_1,x_2)W_{12}\overline{\omega(x_1,x_2)}\mathrm{d}x_1\,\mathrm{d}x_2\\ &+\int_{\mathbb{R}^4}|\mathbf{a}_N(x_1-x_2)|^2(\rho_\omega(x_1)\rho_\omega(x_2)-|\omega(x_1,x_2)|^2)\mathrm{d}x_1\,\mathrm{d}x_2\\ &-N\frac{g}{2}\int_{\mathbb{R}^4}|\mathbf{a}_N(x_1-x_2)|^2|\omega(x_1,x_2)|^2dx_1\,\mathrm{d}x_2\\ &-\int_{\mathbb{R}^6}W_{123}[\rho_\omega(x_1)|\omega(x_2,x_3)|^2+\rho_\omega(x_2)|\omega(x_1,x_3)|^2+\rho_\omega(x_3)|\omega(x_1,x_2)|^2]\mathrm{d}x_1\,\mathrm{d}x_2\,\mathrm{d}x_3\\ &+\int_{\mathbb{R}^6}W_{123}\big[2\mathrm{Re}\big(\omega(x_1,x_2)\omega(x_2,x_3)\omega(x_3,x_1)\big)\big]\mathrm{d}x_1\,\mathrm{d}x_2\,\mathrm{d}x_3\end{aligned}$$

$$|W_{12}| \le 2\varepsilon N^{-1}(-\Delta_1) + 2N\varepsilon^{-1}|\mathbf{a}_N|^2(x_1-x_2)$$

$$\begin{aligned}\left|\int_{\mathbb{R}^4}\omega(x_1,x_2)W_{12}\overline{\omega(x_1,x_2}\right)\mathrm{d}x_1\,\mathrm{d}x_2\right| &\lesssim N^{-1}\varepsilon\mathrm{tr}[-\Delta\omega] + \varepsilon^{-1}NN^{-2+s}R^{-2s}N\\ &\lesssim \varepsilon + \varepsilon^{-1}N^{s(1+2r)} \lesssim N^{\frac{s}{2}(1+2r)}\end{aligned}$$

$$\begin{aligned}&\left|\int_{\mathbb{R}^4}\left|\mathbf{a}_N(x_1-x_2)\right|^2(\rho_\omega(x_1)\rho_\omega(x_2)-|\omega(x_1,x_2)|^2)\mathrm{d}x_1\,\mathrm{d}x_2\right|\\ &\le \|(|\mathbf{a}_N|^2*\rho)\rho\|_1 + N\|\mathbf{a}_N\|_\infty^2 \lesssim 1\end{aligned}$$

$$N\|\mathbf{a}_N\|_\infty^2\int_{\mathbb{R}^4}|\omega(x,y)|^2 \le N^{s(1+2r)}$$

$$\left|\int_{\mathbb{R}^6}W_{123}\rho_\omega(x_1)\left|\omega(x_2,x_3)\right|^2\mathrm{d}x_1\,\mathrm{d}x_2\,\mathrm{d}x_3\right| \le N\||\mathbf{a}_N|^2*\rho\|_\infty \lesssim 1$$

$$\left|\int_{\mathbb{R}^6} W_{123}\rho_\omega(x_2)\right|\omega(x_1,x_3)\Big|^2 \ \mathrm{d}x_1\ \mathrm{d}x_2\ \mathrm{d}x_3 \ | \leq N \sup_{x_1,x_3} \int_{\mathbb{R}^6} \left(\varepsilon^{-1}|\mathbf{a}_N|^2(x_1-x_2)+\varepsilon|\mathbf{a}_N|^2(x_1-x_3)\right)\rho(x_2)\mathrm{d}x_2$$
$$\lesssim N\varepsilon^{-1}\||\mathbf{a}_N|^2 * \rho\|_\infty + N^2\varepsilon N^{-2+s}R^{2s}$$
$$\lesssim \varepsilon^{-1} + \varepsilon N^{s(1+2r)} \lesssim N^{\frac{s}{2}(1+2r)}$$

$$|\omega(x_1,x_2)\omega(x_2,x_3)\omega(x_3,x_1)| \lesssim |\omega(x_1,x_2)|^2\rho(x_3) + |\omega(x_2,x_3)|^2\rho(x_1)$$

$$P_N^{(k)} = \sum_{d=1}^{n} P_{1\ldots n}^{(d)} P_{n+1\ldots N}^{(k-d)}$$

$$\begin{aligned}
\left(P_{1\ldots n}^{(a)} h_{1\ldots n} P_{1\ldots n}^{(b)}\right)\hat{f} &= \sum_{k\in\mathbb{Z}}^{N} f(k) P_{1\ldots n}^{(a)} h_{1\ldots n} P_{1\ldots n}^{(b)} \sum_{d=1}^{n} P_{1\ldots n}^{(d)} P_{n+1\ldots N}^{(k-d)} \\
&= \sum_{k\in\mathbb{Z}}^{N} f(k) P_{1\ldots n}^{(a)} h_{1\ldots n} P_{1\ldots n}^{(b)} P_{n+1\ldots N}^{(k-b)} \\
&= \sum_{k\in\mathbb{Z}}^{N} f(k) P_{n+1\ldots N}^{(k-b)} P_{1\ldots n}^{(a)} h_{1\ldots n} P_{1\ldots n}^{(b)} \\
&= \sum_{k\in\mathbb{Z}}^{N} f(k) \sum_{d=0}^{n} P_{1\ldots n}^{d} P_{n+1\ldots N}^{(k+a-b-d)} P_{1\ldots n}^{(a)} h_{1\ldots n} P_{1\ldots n}^{(b)} \\
&= \sum_{k\in\mathbb{Z}}^{N} f(k) P_N^{(k+a-b)} \left(P_{1\ldots n}^{(a)} h_{1\ldots n} P_{1\ldots n}^{(b)}\right) \\
&= \sum_{m\in\mathbb{Z}}^{N} f(m+b-a) P_N^{(m)} \left(P_{1\ldots n}^{(a)} h_{1\ldots n} P_{1\ldots n}^{(b)}\right) \\
&= \overline{\tau_{b-a} f}\left(P_{1\ldots n}^{(a)} h_{1\ldots n} P_{1\ldots n}^{(b)}\right)
\end{aligned}$$

CONCLUSIONES.

Resulta evidente que las métricas desarrolladas en este trabajo, abonan a la comprensión de las premisas nucleares de la Teoría Cuántica de Campos Relativistas o Curvos, en la medida en que:

Suponemos un campo cuántico indeterminado en el que, interactúan partículas subatómicas aglutinadas según su naturaleza, con distintos centros de masa y energía y con trayectorias multideterminantales.

En condiciones gravitacionales, extremas o no, una partícula proyectil, sea oscura o estrella, según las definiciones recogidas por la TCCR, deforma el espacio – tiempo cuántico, curvándolo o en su defecto, generando un agujero negro cuántico. Las métricas recogidas en este trabajo, permiten explicar matemáticamente, los aspectos tensoriales del campo curvado, así como y en forma principal, el orbital de la partícula oscura o estrella, a propósito de la gravedad que la interfiere. Diseñamos mapas hipotéticos con la finalidad de trazar la trayectoria de la partícula deformante y, en consecuencia, de las

partículas orbitales, lo que permite anticipar escenarios de colapso o aniquilación por colapso. En este punto es importante precisar, que el propulsor de la partícula deformante es en sí, su masa y energía, aunque no converjan al momento del colapso o de la aniquilación. Las condiciones de extrema gravedad o gravedad en condiciones no perturbativas, vuelven a la partícula deformante, un centro de gravedad en sí mismo, desplazándose por el campo, deformando su entorno e incidiendo en el comportamiento de las partículas vecinas en las relaciones de interacción. En la TCCR, usamos, no solamente tensores para explicar la curvatura, sino operadores, propagadores, osciladores e inyectores relativos no solamente a la partícula deformante sino a las partículas vecinas u orbitales las cuales se ven repercutidas por la gravedad generada por la partícula principal. El escenario de gravedad a escala cuántica, no se produce necesariamente por excitación de los estados cuánticos de una partícula específica, sino del momento mismo de su estado fundamental, provocado por la masa o la energía, que son extremadamente densas, sin embargo, cualquier partícula excitada, es capaz de generar condiciones gravitacionales, cuando se aniquila o colapsa. El momento angular y el spin de la partícula gravitacional y las partículas orbitales, es incierto, al igual que su conducta vectorial, sin embargo, este trabajo contribuye a precisar matemáticamente el instante exacto de la deformación del mapa cuántico, para cuyos efectos, hemos dise;ado planos divergentes de curvatura además de establecer modelos matriciales y superoperadores para describir, la acción gravitacional de la particula oscura o estrella en un momento espec'ifico en el plano cuántico. El trabajo aquí desarrolla, cuantiza estas dinámicas, calculando incluso, qubits de información que permitan registrar la gravedad intersecando el plano cuántico en el que se despliega.

REFERENCIAS BIBLIOGRÁFICAS

Théotime Girardot, Derivation of the Hartree dynamics for a N-particles fermionic 2D system interacting via long-range electric and magnetic two-body singular potentials in a dilute regime, arXiv:2507.16300v1 [math-ph] 22 Jul 2025.

Rabah Abdelmouheymen KHAMADJA, FROM VQE TO SQD : MODERN QUANTUM ALGORITHMS FOR ELECTRONIC STRUCTURE PROBLEMS, arXiv:2509.21555v1 [quant-ph] 25 Sep 2025.

Simon H. Hille y Attila Szabó, TeMFpy: a Python library for converting fermionic mean-field states into tensor networks, arXiv:2510.05227v1 [cond-mat.str-el] 6 Oct 2025.

Paul A. Johnson, Charles-Émile Fecteau, Samuel Nadeau, Mauricio Rodríguez-Mayorga y Pierre-François Loos, Connections between Richardson-Gaudin States, Perfect-Pairing, and Pair Coupled-Cluster Theory, arXiv:2510.06144v1 [physics.chem-ph] 7 Oct 2025.

Alfred Li, Ankit Mahajan y Sandeep Sharma, Fokker-Planck equation governing the distribution of walkers in AFQMC, arXiv:2510.19914v1 [physics.chem-ph] 22 Oct 2025.

Gerald V. Dunne, Slater Decomposition of Laughlin States, arXiv:cond-mat/9306022v1 8 Jun 1993.

Håkon Emil Kristiansen, Håkon Kvernmoen, Simen Kvaal y Thomas Bondo Pedersen, Configuration weights in coupled-cluster theory, arXiv:2411.00690v2 [physics.chem-ph] 27 Feb 2025.

Yuri Alexandre Aoto y Márcio Fabiano da Silva, Calculating the distance from an electronic wave function to the manifold of Slater determinants through the geometry of Grassmannians, arXiv:2012.05283v1 [quant-ph] 9 Dec 2020.

Bin Yan, Rachel E. Wooten, Kevin M. Daily y Chris H. Greene, Hyperspherical Slater determinant approach to few-body fractional quantum Hall states, arXiv:1611.05305v1 [cond-mat.str-el] 16 Nov 2016.

Clemens Giuliani, Jannes Nys, Rocco Martinazzo, Giuseppe Carleo y Riccardo Rossi, Precise Quantum Chemistry calculations with few Slater Determinants, arXiv:2503.14502v2 [physics.chem-ph] 2 May 2025.

Chong Hian Chee, Daniel Leykam, Adrian M. Mak y Dimitris G. Angelakis, Shallow quantum circuits for efficient preparation of Slater determinants and correlated states on a quantum computer, arXiv:2301.07477v5 [quant-ph] 26 Jul 2023.]

PIETRO SILVI, DAVIDE ROSSINI, ROSARIO FAZIO, GIUSEPPE E. SANTORO y VITTORIO GIOVANNETTI, Matrix Product State representation for Slater Determinants and Configuration Interaction States, arXiv:1205.4154v2 [quant-ph] 5 Nov 2012.

CHIARA BOCCATO, FRANCESCA PIERONI y DARIO TREVISAN, ON DISTANCES AMONG SLATER DETERMINANT STATES AND DETERMINANTAL POINT PROCESSES, arXiv:2504.08971v1 [math-ph] 11 Apr 2025.

John Kearney, Hojin Yoo y Kathryn M. Zurek, Is a Higgs Vacuum Instability Fatal for High-Scale Inflation, arXiv:1503.05193v1 [hep-th] 17 Mar 2015.

G. F. Bertsch y L. M. Robledo, Symmetry Restoration in Hartree-Fock-Bogoliubov Based

Theories, Phys. Rev. Lett. **108**, 042505 — Published 26 January 2012.

S.V. Molodtsov y G.M. Zinovjev, Bogolyubov-Hartree-Fock approach to studying the QCD ground state, arXiv:0811.4405v3 [hep-ph] 11 Aug 2009.

Marcel Griesemer y Fabian Hantsch, Unique Solutions to Hartree-Fock Equations for Closed Shell Atoms, arXiv:1012.5179v1 [math-ph] 23 Dec 2010.

Niels Benedikter, Effective Dynamics of Interacting Fermions from Semiclassical Theory to the Random Phase Approximation, arXiv:2203.11255v3 [math-ph] 5 Jul 2022.

P. A. M. Guichon, J. R. Stone y A. W. Thomas, Hartree-Fock Formulation of the QMC Model at Finite Temperature, arXiv:2310.19262v1 [nucl-th] 30 Oct 2023.

Ettore Vitali, Peter Rosenberg y Shiwei Zhang, Monte Carlo Methods in the Manifold of Hartree-Fock-Bogoliubov Wave Functions, arXiv:2409.11571v1 [cond-mat.str-el] 17 Sep 2024.

Stefan Vuckovic, John Kozlowski y Kieron Burke, Density functional analysis: The theory of density-corrected DFT, arXiv:1908.05721v1 [physics.chem-ph] 15 Aug 2019.

I. C. Danchev, A. N. Antonov, D. N. Kadrev, M. K. Gaidarov, P. Sarriguren y E. Moya de Guerra, Symmetry energy properties of neutron-rich nuclei from the coherent density fluctuation model

applied to nuclear matter calculations with Bonn potentials, arXiv:2006.01471v1 [nucl-th] 2 Jun 2020.

CYRIL MALÉZÉ, SCATTERING FOR THE ONE DIMENSIONAL HARTREE FOCK EQUATION, arXiv:2406.17715v3 [math.AP] 10 Mar 2025.

Google AI Quantum and Collaborators, Hartree-Fock on a superconducting qubit quantum computer, arXiv:2004.04174v2 [quant-ph] 20 Apr 2020.

SOHEI ASHIDA, CONVERGENCE OF SCF SEQUENCES FOR THE HARTREE-FOCK EQUATION, arXiv:2205.10300v4 [math.AP] 25 Jan 2023.

Nikolai Kaschewski y Axel Pelster, The Weighted Hartree-Fock-Bogoliubov method for interacting fermions: An application to ultracold Fermi superfluids, arXiv:2508.18801v1 [cond-mat.quant-gas] 26 Aug 2025.

Andreas Erbs Hillers-Bendtsen y Todd J. Martinez, Accelerating Hartree-Fock and Density Functional Theory Calculations using Tensor Hypercontraction. (arXiv)

Federico Rossi y Henrik Koch, Convex Hartree-Fock theory: A simple framework for ground state conical intersections, arXiv:2508.21453v1 [physics.chem-ph] 29 Aug 2025.

Yaolong Zhang, Bin Jiang y Hua Guo, SchrödingerNet: A Universal Neural Network Solver for The Schrödinger Equation. (arXiv)

Jong-Kwon Ha y Ryan J. MacDonell, Supplemental Material for Analog Quantum Simulation of Coupled Electron-Nuclear Dynamics in Molecules. (arXiv)

Xuezhi Bian, Yanze Wu, Tian Qiu, Tao Zhen y Joseph E. Subotnik, A semiclassical non-adiabatic phase-space approach to molecular translations and rotations: A new picture of surface hopping and electronic inertial effects, arXiv:2410.01156v1 [physics.chem-ph] 2 Oct 2024.

Jan Biedermann y Lukas Janssen, Dirac quantum criticality in twisted double bilayer transition metal dichalcogenides, arXiv:2509.04561v1 [cond-mat.mes-hall] 4 Sep 2025.

Pujita Das, Parth Bahuguna, Tulika Maitra y Narayan Mohanta, Superconducting pairing symmetries in charge-ordered kagomé metals, arXiv:2509.04571v1 [cond-mat.supr-con] 4 Sep 2025.

Rahul Ghosh, Quantum Phases in a Two-Dimensional Generalized interacting SSH Model, arXiv:2509.05655v1 [cond-mat.str-el] 6 Sep 2025.

E. Rule, I. A. Chernyshev, I. Stetcu, J. Carlson y R. Weiss, Recursive algorithm for constructing antisymmetric fermionic states in first quantization mapping, arXiv:2509.07279v1 [quant-ph] 8 Sep 2025.

Giorgio Visentin y François Mauger, Configuration-interaction calculations with density-functional theory molecular orbitals for modeling valence- and core-excited states in molecules, arXiv:2509.08245v1 [physics.chem-ph] 10 Sep 2025.

M. Rothman, B. Johnson-Toth, G. Hagen, M. Heinz y T. Papenbrock, NuLattice: Ab initio computations of atomic nuclei on lattices, arXiv:2509.08771v1 [nucl-th] 10 Sep 2025.

Bilal Hawashin, Julian Kleeschulte, David Kurz y Michael M. Scherer, Relativistic Mott transition, high-order van Hove singularity, and mean-field phase diagram of twisted double bilayer WSe2, arXiv:2509.09398v1 [cond-mat.mes-hall] 11 Sep 2025.

Usuf Rahaman, Investigation of ground state properties and shape evolution in Hf isotopes using the CDFT approach, arXiv:2509.12565v1 [nucl-th] 16 Sep 2025.

Ibrahim E. Awad, Abd Al-Aziz A, Abu-Saleh, Gurleen Cheema, Joshua W. Hollett y Raymond A. Poirier, Atomic Radial Correlation Energy Density Components, arXiv:2509.12580v1 [physics.chem-ph] 16 Sep 2025.

Shi-jing, Suo Qiu, H. Sagawa y Xian-Rong Zhou, Charge symmetry breaking effect in mirror Λ hypernuclei with Skyrme-Hartree-Fock model, arXiv: 2509.13655v2 [nucl-th] 23 Oct 2025.

Félix Desrochers, Joe Huxford, Mark R. Hirsbrunner y Yong Baek Kim, Electronic Crystal Phases in the Presence of Non-Uniform Berry Curvature and Tunable Berry Flux : TheλN-Jellium model, isoarXiv: 2509.15300v1 [cond-mat.str-el] 18 Sep 2025.

Xuan Zeng, Ru-You Zheng, Zhi-Wei Liu, Li-Sheng Geng y Xian-Rong Zhou, Hypernuclear structure with the new leading order covariant chiral hyperon-nucleon force, arXiv:2509.16878v1 [nucl-th] 21 Sep 2025.

Xin Lu, Yuanfan Yang, Zhongqing Guo y Jianpeng Liu, General Many-Body Perturbation Framework for Moiré Systems, arXiv:2509.19764v3 [cond-mat.str-el] 22 Oct 2025.

Jian Kang, Minxuan Wang y Oskar Vafek, Orbital magnetization and magnetic susceptibility of interacting electrons, therearXiv: 2509.20626v1 [cond-mat.str-el] 25 Sep 2025.

Alan A. Dzhioev y N. V. Antonenko, Isoenergetic description of induced fission pathways within energy-density functional theory, arXiv:2509.22006v1 [nucl-th] 26 Sep 2025.

Hopersky A.N, Nadolinsky A.M, Novikov S.A y Koneev R.V, Two-photon ionization of the *K-shell* of a heavy beryllium-like atomic ion. (arXiv)

Peyman Najafi, Aaron Villanueva y Hilbert Kappen, Path Integral Quantum Control for Quantum Chemistry Applications, arXiv:2509.24104v1 [quant-ph] 28 Sep 2025.

R. Folprecht, Knapp,1 G. De Gregorio, R. Mancino, P. Vesely y N. Lo Iudice, Bulk and spectroscopic nuclear properties within an ab initio renormalized random-phase approximation framework, arXiv:2510.00878v1 [nucl-th] 1 Oct 2025.

Xiaoyu Liu, Chong Wang, Xiao-Wei Zhang, Ting Cao y Di Xiao, Orbital Magnetization in Correlated States of Twisted Bilayer Transition Metal Dichalcogenides, efarXiv: 2510.01727v1 [cond-mat.mes-hall] 2 Oct 2025.

Yanek Verghis, Denis Sedov, Jakob Weßling, Prathyush P. Poduval y Mathias S. Scheurer, Vestigial pairing from fluctuating magnetism and triplet superconductivity, arXiv:2510.02474v1 [cond-mat.supr-con] 2 Oct 2025.

Nicolau Sobrosa, Miguel Goncalvez, Eduardo V. Castro, Pedro Ribeiro y Bruno Amorim, Ground state and excitations of quasiperiodic 1D narrow-band moiré systems – a mean field approach, inarXiv: 2510.04132v1 [cond-mat.str-el] 5 Oct 2025.

Claudia D. Alvarado, Eduardo Chiumiento, Homogeneous spaces in Hartree-Fock-Bogoliubov theory, arXiv:2402.15606v1 [math.FA] 23 Feb 2024.

A. I.Komech, On the Hartree-Fock dynamics in wave-matrix picture, arXiv:1407.5208v4 [math-ph] 4 Jun 2015.

Sahil Gulania, Stephen K. Gray, Yuri Alexeev, Bo Peng y Niranjan Govind, Hybrid algorithm for the time-dependent Hartree–Fock method using the Yang–Baxter equation on quantum computers, arXiv:2309.00737v1 [quant-ph] 1 Sep 2023.

James Daniel Whitfield y Zoltán Zimborás, On the NP-completeness of the Hartree-Fock method for translationally invariant systems, arXiv:1408.3459v2 [quant-ph] 30 Dec 2014.

B. R. Quea, J. M. Zhang, H. F. Song y Y. Liu, Hartree-Fock approximation for bosons with symmetry-adapted variational wave functions, arXiv:2502.15863v1 [cond-mat.quant-gas] 21 Feb 2025.

Jia Liu, Yi Fei Niu y Wen Hui Long, Configuration-interaction relativistic Hartree-Fock model, arXiv:2411.05370v3 [nucl-th] 11 Apr 2025.

CHARLES COLLOT, ELENA DANESI, ANNE-SOPHIE DE SUZZONI y CYRIL MALEZE, STABILITY OF HOMOGENEOUS EQUILIBRIA OF THE HARTREE-FOCK EQUATION, FOR ITS EQUIVALENT FORMULATION FOR RANDOM FIELDS, arXiv:2310.03442v2 [math.AP] 15 Oct 2024.

Ichio Kikuchi y Akihito Kikuchi, Symbolic, numeric and quantum computation of Hartree-Fock equation, arXiv:2401.00019v2 [quant-ph] 18 Jun 2024.

Amir Ayati, Hugh G. A. Burton y Stijn De Baerdemacker, Spin-Symmetry Projected constrained Unrestricted Hartree–Fock, arXiv:2412.16458v1 [quant-ph] 21 Dec 2024.

Alexis Ralli, Tim Weaving, Peter V. Coveney y Peter J. Love, Bridging Quantum Chemistry and MaxCut: Classical Performance Guarantees and Quantum Algorithms for the Hartree-Fock Method, arXiv:2506.04223v1 [quant-ph] 4 Jun 2025.

Vlad-Mihai Ene, Ilinca Lianu y Ioan Grosu, Hartree-Fock approximation for non-Coulomb interactions in three and two-dimensional systems, arXiv:2408.14967v1 [cond-mat.quant-gas] 27 Aug 2024.

Matteo Castagnola, Rosario R. Riso, Yassir El Moutaoukal y Enrico Ronca, Strong coupling quantum electrodynamics Hartree-Fock response theory, arXiv:2502.14511v1 [physics.chem-ph] 20 Feb 2025.

Klaas Giesbertz, Hartree–Fock & Density Functional Theory, arXiv:2010.10243v2 [physics.ed-ph] 7 Feb 2023.

Fei Xu, Multilevel correction type of adaptive finite element method for Hartree–Fock equation, arXiv:2510.10879v1 [math.NA] 13 Oct 2025.

Sunilkumar V. Rajat, Sandeep Gautam y Arko Roy, Finite-temperature phase diagram and collective modes of coherently coupled Bose mixtures, arXiv:2510.11671v1 [cond-mat.quant-gas] 13 Oct 2025.

N. Ebrahimian, Absorbed power in ultracold polarized Fermi mixtures at normal-superfluid separation phase: Mass-imbalanced effect. (arXiv).

Yasuhiro Tanaka y Hitoshi Seo, Photoinduced melting dynamics and collective mode in a correlated charge-order system, arXiv:2510.16855v1 [cond-mat.str-el] 19 Oct 2025.

Yulong Pan y Michael Lindsey, Fast adaptive discontinuous basis sets for electronic structure, arXiv:2510.21213v1 [physics.comp-ph] 24 Oct 2025.

Xuepeng Wang, Johannes S. Hofmann y Debanjan Chowdhury, Intertwined Orders, Quantum Criticality and Skyrmions in Tunable Topological Bands, arXiv:2510.21913v1 [cond-mat.str-el] 24 Oct 2025.

Fei Xu, Effective approximations for Hartree–Fock exchange potential, arXiv:2509.00733v1 [physics.chem-ph] 31 Aug 2025.

Paul Haubenwallner y Matthias Heller, Fully numerical Hartree-Fock calculations for atoms and small molecules with quantics tensor trains, arXiv:2503.08430v2 [physics.chem-ph] 11 Jun 2025.

Ericka Roy Miller y Shane M. Parker, Numerically Stable Resonating Hartree-Fock, arXiv:2411.00712v2 [physics.chem-ph] 13 Mar 2025.

E. Langmann y J. Lenells, Update of Hartree–Fock theory for Hubbard-like models, arXiv:2506.16525v1 [cond-mat.str-el] 19 Jun 2025.

Volker Bach, Hartree–Fock Theory, Lieb's Variational Principle and their Generalizations, arXiv:2209.10189v1 [quant-ph] 21 Sep 2022.

D. S. Rosa, T. Frederico, R. M. Francisco y G. Krein, Reliability of the Born-Oppenheimer approximation in noninteger dimensions, arXiv:2408.01776v1 [cond-mat.quant-gas] 3 Aug 2024.

X. L. Huang, S. L. Wu, L. C. Wang y X. X. Yi, Born-Oppenheimer approximation for open quantum systems within the quantum trajectory approach, arXiv:1003.1177v2 [quant-ph] 17 Apr 2010.

Haci Akbas y O. Teoman Turgut, Born-Oppenheimer Approximation for a Singular System, arXiv:1602.02811v2 [math-ph] 29 Mar 2016.

John Bonini, Iman Ahmadabadi y Johannes Flick, Cavity-Born Oppenheimer Approximation for Molecules and Materials via Electric Field Response, reasonarXiv: 2407.14613v1 [physics.chem-ph] 19 Jul 2024.

Marit R. Fiechter y Jeremy O. Richardson, Understanding the Cavity Born–Oppenheimer Approximation, arXiv:2401.03532v1 [physics.chem-ph] 7 Jan 2024.

Haowu Duan, Alex Kovner y Michael Lublinsky, Born-Oppenheimer Renormalization group for High Energy Scattering: the Setup and the Wave Function, arXiv:2412.05085v1 [hep-ph] 6 Dec 2024.

Haowu Duan, Alex Kovner y Michael Lublinsky, Born-Oppenheimer Renormalization group for High Energy Scattering: CSS, DGLAP and all that, arXiv:2412.05097v1 [hep-ph] 6 Dec 2024.

Anjiao Gu y Shi Jin, Quantum simulation of a class of highly-oscillatory transport equations via Schrödingerisation, arXiv:2501.10176v2 [math.NA] 4 Sep 2025.

D. Germani, B. Grinstein y A.D. Polosa, Tetraquarks in the Born-Oppenheimer approximation, arXiv:2501.13249v2 [hep-ph] 3 Apr 2025.

Jakob Hoffmann, Lasse Müller y Marc Wagner, arXiv:2501.16188v1 [hep-lat] 27 Jan 2025.

Galit Cohen, Rachel Steinitz-Eliyahu, E. K. U. Gross, Sivan Refaely-Abramson y Ryan Requist, Non-adiabaticity from first principles: the exact-factorization approach for solids, arXiv:2502.07439v1 [cond-mat.mtrl-sci] 11 Feb 2025.

Robert Stanton, Mehmet Cagri Kaymak y Anders M. N. Niklasson, Shadow Molecular Dynamics for a Charge-Potential Equilibration Model, arXiv:2502.09602v1 [physics.chem-ph] 13 Feb 2025.

Max Hays, Junghyun Kim y William D. Oliver, Non-degenerate noise-resilient superconducting qubit, arXiv:2502.15459v1 [quant-ph] 21 Feb 2025.

Kamran Behnia, Phonon thermal Hall as a lattice Aharonov-Bohm effect, arXiv:2502.18236v5 [cond-mat.mes-hall] 29 Sep 2025.

Muhammad Naeem Anwar, arXiv:2502.20329v1 [hep-ph] 27 Feb 2025.

Richard F. Lebed y Steven R. Martinez, Meson-Meson Molecular Binding Potentials in the Diabatic Dynamical Diquark Model, arXiv:2502.20567v2 [hep-ph] 15 Apr 2025.

Ville J Harkonen, Beyond Born-Oppenheimer Green's function theories: absolute and relational, arXiv:2503.01417v1 [cond-mat.other] 3 Mar 2025.

Aleksander P. Wozniak, Ludwik Adamowicz, Thomas Bondo Pedersen y Simen Kvaal, Rothe Time Propagation for Coupled Electronic and Rovibrational Quantum Dynamics, arXiv:2503.09813v1 [physics.chem-ph] 12 Mar 2025.

A. Becker, G. M. Koutentakis y P. Schmelcher, Dynamical probe of the pseudo Jahn-Teller effect in one-dimensional confined fermions, arXiv:2503.09835v2 [cond-mat.quant-gas] 24 Jun 2025.

Hervé Bergeron, Przemysław Małkiewicz y Patrick Peter, Non-Gaussianities as a Signature of Quantumness of Quantum Cosmology, arXiv:2503.14570v1 [gr-qc] 18 Mar 2025.

Bowen Kang, Xi Xia y Tao Guo, Hidden heavy flavor tetraquarks in the Born-Oppenheimer approximation, arXiv:2503.10173v2 [hep-ph] 6 Apr 2025.

Kiyoharu Kawana, Phases and propagation of closed p-brane, arXiv:2503.14902v1 [hep-th] 19 Mar 2025.

Mirko Daumann y Thomas Dahm, Particle pairing causes subdiffusion of heavy particles in the imbalanced Hubbard model, arXiv:2503.15409v2 [cond-mat.stat-mech] 22 Jul 2025.

Thomas Schnappinger y Markus Kowalewski, Molecular Polarizability under Vibrational Strong Coupling, arXiv:2503.17102v1 [physics.chem-ph] 21 Mar 2025.

Nadine C. Bradbury, Titouan Duston, Zhen Tao, Jonathan I. Rawlinson, Robert Littlejohn y Joseph Subotnik, Symmetry Breaking as Predicted by a Phase Space Hamiltonian with a Spin Coriolis Potential, arXiv:2504.03100v2 [physics.chem-ph] 28 May 2025.

Rhiannon A. Zarotiadis, Joseph E. Lawrence y Jeremy O. Richardson, Nonadiabatic ring-polymer instanton rate theory: a generalized dividing-surface approach, arXiv:2505.04770v1 [physics.chem-ph] 7 May 2025.

David Linteau, Saverio Moroni, Giuseppe Carleo y Markus Holzmann, Universal neural wave functions for high-pressure hydrogen, arXiv:2504.07062v1 [cond-mat.str-el] 9 Apr 2025.

Yaser Tavakoli, Ahad Khaleghi Ardabili y Sara Mosaddegh, Fermions in a loop quantum cosmological spacetime, arXiv:2505.06695v2 [gr-qc] 30 Sep 2025.

S. GHERGHE, I. MOYANO y I.M. SIGAL, ON THE TIME-DEPENDENT BORN-OPPENHEIMER APPROXIMATION, arXiv:2505.18701v1 [quant-ph] 24 May 2025.

Lei Liu, Yanmei Xiao y Tao Guo, Hydrogen-like structures in the strong interaction, arXiv:2505.22177v1 [hep-ph] 28 May 2025.

Simon Euchner y Igor Lesanovsky, Rydberg atom arrays as quantum simulators for molecular dynamics, arXiv:2506.09865v1 [quant-ph] 11 Jun 2025.

Titouan Duston, Nadine Bradbury, Zhen Tao y Joseph E. Subotnik, Conical Intersections and Electronic Momentum As Viewed From Phase Space Electronic Structure Theory, arXiv:2506.11963v1 [physics.chem-ph] 13 Jun 2025.

Maxime Labat, Guillaume Jeanmairet y Emmanuel Giner, Prediction of the aqueous redox properties of functionalized quinones using a new QM/MM variational formulation, arXiv:2506.12448v1 [physics.chem-ph] 14 Jun 2025.

CLAUDIO CACCIAPUOTI, ANDREA POSILICANO y HAMIDREZA SABERBAGHI, THE BORN-OPPENHEIMER APPROXIMATION FOR A 1D 2+1 PARTICLE SYSTEM WITH ZERO-RANGE INTERACTIONS, arXiv:2506.21457v1 [math-ph] 26 Jun 2025.

Eric W. Fischer, Cavity Born-Oppenheimer Coupled Cluster Theory: Towards Electron Correlation in the Vibrational Strong Light-Matter Coupling Regime, arXiv:2507.10100v2 [physics.chem-ph] 4 Sep 2025.

Olimpia Lombardi, Sebastian Fortin, Juan Camilo Martínez González y Hernán Accorinti, What are we talking about when we discuss the Born-Oppenheimer approximation. (arXiv)

LINO BENEDETTO, QUANTUM ERGODICITY FOR CONTACT METRIC STRUCTURES, arXiv:2507.18216v3 [math.AP] 18 Sep 2025.

O. Jonathan Fajen, Oscar Granas, Todd J. Martinez y Anders M. N. Niklasson, Shadow excited state molecular dynamics with the ΔSCF method, arXiv:2507.21461v1 [physics.chem-ph] 29 Jul 2025.

Kratika Mazde, Lisa Mickel y Patrick Peter, Quantum cosmological background superposition and perturbation predictions, arXiv:2508.06231v1 [gr-qc] 8 Aug 2025.

Dil K. Limbu, Sandip Bhusal, Diana M. Castaneda-Bagatella y Farnaz A. Shakib, Diagonal Born–Oppenheimer Corrections in Condensed-Phase Ring Polymer Surface Hopping, arXiv:2509.10629v1 [physics.chem-ph] 12 Sep 2025.

Morris Brooks y David Mitrouskas, Adiabatic Klein–Gordon Dynamics for the Renormalized Nelson Model, arXiv:2509.14226v1 [math-ph] 17 Sep 2025.

Xiaohan Dan, Zhuoran Long, Tianyin Qiu, Jan Paul Menzel, Qiang Shi y Victor Batista, Nonadiabatic H-Atom Scattering Channels on Ge(111) Elucidated by the Hierarchical Equations of Motion, arXiv:2509.16916v1 [cond-mat.mtrl-sci] 21 Sep 2025.

Julian Stetzler, Sophya Garashchuk y Vitaly Rassolov, Factorized electron-nuclear dynamics with effective complex potential: on-the-fly implementation for H+2 in a laser field, arXiv:2510.07483v1 [physics.chem-ph] 8 Oct 2025.

Nora Brambilla, Gast~ao Krein, Jaume Tarrus Castella y Antonio Vairo, The Born-Oppenheimer approximation in an e_ective _eld theory language, arXiv:1707.09647v2 [hep-ph] 22 Jan 2018.

Bernardo Barrera, Daniel P. Arovas, Anushya Chandran y Anatoli Polkovnikov, The Moving Born-Oppenheimer Approximation, arXiv:2502.17557v2 [quant-ph] 7 Apr 2025.

Jakob Gunther, Alberto Baiardi, Markus Reiher y Matthias Christandl, More quantum chemistry with fewer qubits, arXiv:2308.16873v4 [quant-ph] 3 Nov 2024.

Ludwig Nutzel, Alexander Gresch, Lukas Hehn, Lucas Marti,1 Robert Freund, Alex Steiner, Christian D. Marciniak, Timo Eckstein, Nina Stockinger, Stefan Wolf, Thomas Monz, Michael Kuhn y Michael J. Hartmann, Solving an Industrially Relevant Quantum Chemistry Problem on Quantum Hardware, alarXiv: 2408.10801v1 [quant-ph] 20 Aug 2024.

Dominic W. Berry, M_aria Kieferov, Artur Scherer, Yuval R. Sanders, Guang Hao Low, Nathan Wiebe, Craig Gidney y Ryan Babbush, Improved Techniques for Preparing Eigenstates of Fermionic Hamiltonians, arXiv:1711.10460v2 [quant-ph] 21 Dec 2017.

Dave Wecker, Bela Bauer, Bryan K. Clark, Matthew B. Hastings y Matthias Troyer, Can quantum chemistry be performed on a small quantum computer?, arXiv:1312.1695v2 [quant-ph] 6 Jan 2014.

Yangjun Wu, Xiansong Xu, Dario Poletti, Yi Fan, Chu Guo y Honghui Shang, A real neural network state for quantum chemistry, afarXiv: 2301.03755v1 [quant-ph] 10 Jan 2023.

Ka-Wa Yip, Kubra Yeter-Aydeniz y Sijia S. Dong, Variational Quantum Annealing for Quantum Chemistry, arXiv:2503.15473v1 [quant-ph] 19 Mar 2025.

Jonathan Romero, Ryan Babbush, Jarrod R. McClean, Cornelius Hempel, Peter Love y Alan Aspuru-Guzik, Strategies for quantum computing molecular energies using the unitary coupled cluster ansatz, arXiv:1701.02691v2 [quant-ph] 10 Feb 2018.

Mario Motta y Julia E. Rice, Emerging quantum computing algorithms for quantum chemistry, arXiv:2109.02873v2 [quant-ph] 13 Nov 2021.

Matthew Otten, Matthew R. Hermes, Riddhish Pandharkar, Yuri Alexeev, Stephen K. Gray y Laura Gagliardi, Localized Quantum Chemistry on Quantum Computers, arXiv: 2203.02012v1 [quant-ph] 3 Mar 2022.

Mohammad Haidar, Hugo D. Nogueira y Jean-Philippe Karr, Quantum Computing Approach to Atomic and Molecular Three-Body Systems, arXiv:2510.18005v1 [quant-ph] 20 Oct 2025.

Zhong-Xia Shang, Han-Sen Zhong, Yu-Kun Zhang, Cheng-Cheng Yu, Xiao Yuan, Chao-Yang Lu, Jian-Wei Pan y Ming-Cheng Chen, Boson sampling enhanced quantum chemistry, arXiv:
2403.16698v2 [quant-ph] 18 Apr 2024.

Juan Miguel Arrazola, Olivia Di Matteo, Nicolas Quesada, Soran Jahangiri, Alain Delgado y Nathan Killoran, Universal quantum circuits for quantum chemistry, arXiv:2106.13839v2 [quant-ph] 10 Jun 2022.

Tian Xue, Jacob P. Covey y Matthew Otten, Efficient algorithms for quantum chemistry on modular quantum processors, arXiv:2506.13332v1 [quant-ph] 16 Jun 2025.

Seunghoon Lee, Joonho Lee, Huanchen Zhai, Yu Tong, Alexander M. Dalzell, Ashutosh Kumar, Phillip Helms, Johnnie Gray, Zhi-Hao Cui, Wen-Yuan Liu, Michael Kastoryano, Ryan Babbush, John Preskill, David R. Reichman, Earl T. Campbell, Edward F. Valeev, Lin Lin y Garnet Kin-Lic Chan, Is there evidence for exponential quantum advantage in quantum chemistry?, arXiv:2208.02199v3 [physics.chem-ph] 14 Nov 2022.

Ingrid von Glehn, James S. Spencer y David Pfau, A Self-Attention Ansatz for Ab-initio Quantum Chemistry, arXiv:2211.13672v2 [physics.chem-ph] 19 Apr 2023.

Yudong Cao, Jonathan Romero, Jonathan P. Olson, Matthias Degroote, Peter D. Johnson, Maria Kieferova, Ian D. Kivlichan, Tim Menke, Borja Peropadre, Nicolas P. D. Sawaya, Sukin Sim,

Libor Veis y Alan Aspuru-Guzik, Quantum Chemistry in the Age of Quantum Computing, arXiv:1812.09976v2 [quant-ph] 28 Dec 2018.

Smik Patel, Praveen Jayakumar, Tzu-Ching Yen y Artur F. Izmaylov, Quantum Measurement for Quantum Chemistry on a Quantum Computer, arXiv:2501.14968v2 [quant-ph] 29 May 2025.

Stepan Fomichev, Kasra Hejazi, Modjtaba Shokrian Zini, Matthew Kiser, Joana Fraxanet, Pablo Antonio Moreno Casares, Alain Delgado, Joonsuk Huh, Arne-Christian Voigt, Jonathan E. Mueller y Juan Miguel Arrazola, Initial state preparation for quantum chemistry on quantum computers, arXiv:2310.18410v2 [quant-ph] 9 Feb 2024.

Samuele Piccinelli, Alberto Baiardi, Max Rossmannek, Almudena Carrera Vazquez, Francesco Tacchino, Stefano Mensa, Edoardo Altamura, Ali Alavi, Mario Motta, Javier Robledo-Moreno, William Kirby, Kunal Sharma, Antonio Mezzacapo y Ivano Tavernell.

Quantum chemistry with provable convergence via randomized sample-based quantum diagonalization, arXiv:2508.02578v1 [quant-ph] 4 Aug 2025.

Sam McArdle, Suguru Endo, Alan Aspuru-Guzik, Simon C. Benjamin y Xiao Yuan, Quantum computational chemistry, arXiv:1808.10402v3 [quant-ph] 27 Jan 2020.

Garnet Kin-Lic Chan, Quantum chemistry, classical heuristics, and quantum advantage, arXiv:2407.11235v1 [quant-ph] 15 Jul 2024.

Michael A. Jones, Harish J. Vallury, Charles D. Hill y Lloyd C. L. Hollenberg, Chemistry beyond the Hartree–Fock energy via quantum computed moments, www.nature.com/scientificreports.